143947

AIR TRANSPORT ASSOCIATION

01 NOV 26 AM 7:30

November 8, 2001

Mr. Nicholas Sabatini
Associate Administrator for Regulation & Certification
Federal Aviation Administration, AVR-1
10A, Room 1000W
800 Independence Avenue, S.W.
Washington, DC 20591

FAA-2001-11032-1

Subject: Flight Deck Door Standards

Dear Mr. Sabatini:

In response to the Department of Transportation's Rapid Response Team (RRT) recommendations on aircraft security issues, the air carrier industry has nearly completed Phase 1 enhancements of flight deck doors. In some cases, these modifications take advantage of the interim regulatory relief provided by SFAR 92, issued on October 9, 2001 that provides relief for 18 months.

The next step under the RRT recommendations is to approve a door design within 6 months that will restore regulatory compliance and provide a barrier against penetration and intrusion, followed by the retrofit of the US fleet of aircraft within 1 year from approval of the door design.

In order to respond to this challenge, industry groups and employee associations have worked with FAA representatives to craft standards for blunt force intrusion and ballistic penetration that will be used in the flight deck door design for the retrofit program. The intrusion standard is set forth in Attachment 1 and the penetration standard in Attachment 2 to this letter. Design work by the airframe manufacturers, applying these standards to doors, is already underway.

In order for industry to proceed at the pace recommended by the RRT, it is imperative that the door standards be accepted by FAA and fixed as an anchor for succeeding design, test, manufacturing, production and installation on an URGENT schedule. Moreover, it is our belief that these standards will provide greater worldwide emulation and uniform compliance if FAA adopts them as a regulatory standard for Part 121 passenger aircraft. While the initial application is intended for Part 121 operators, the International Air Transport Association has begun a review of these standards in order to provide comments and input on behalf of non-US operators. We therefore urge FAA to proceed as rapidly as possible with a regulation that requires observance of these standards for the existing fleet. We recognize that a few smaller size aircraft designs may have unique compliance issues and may therefore need to be excluded from the applicability of the new standards.

AIR TRANSPORT ASSOCIATION OF AMERICA, INC.
1301 PENNSYLVANIA AVENUE, NW SUITE 1100 WASHINGTON, DC 20004-1707
202.626.4000 www.airlines.org

Thank you for your attention to this proposal and for your assistance in helping industry favorably react to the RRT recommendations.

Very truly yours,

Malcolm B. Armstrong
Senior Vice President,
Aviation Safety & Operations
Air Transport Association

Robert E. Robeson, Jr.
Vice President, Civil Aviation
Aerospace Industries Association

Claude Schmitt
Chairman, Airworthiness Committee
European Association of Aerospace Industries

cc: Al Prest
Tony Fazio

Attachments: (1) Standard - Pilot Compartment Intrusion Resistance
(2) Standard - Pilot Compartment Penetration Resistance
(3) Letter to FAA – Flight Deck Door Standards

AIR TRANSPORT ASSOCIATION

November 8, 2001

Mr. Mark Allen
Chairman, Design for Security Harmonization Working Group
Aviation Rulemaking Advisory Committee
The Boeing Company
MC 67-FR
PO Box 3707
Seattle, WA 98124-2207

Subject: Flight Deck Door Standards

Dear Mr. Allen:

The Department of Transportation's Rapid Response Team (RRT) recommendations on the Phase 2 door program requires a design and fleet retrofit within 18 months that will restore the regulatory compliance of the flight deck door and provide a barrier against penetration and intrusion.

In order to respond to this challenge, industry groups and employee associations have worked with FAA representatives to craft standards for blunt force intrusion and ballistic penetration that will be used in the flight deck door design for the retrofit program. The intrusion standard is set forth in Attachment 1 and the penetration standard in Attachment 2 to this letter.

We have urged FAA to proceed as rapidly as possible with a regulation that requires observance of these standards for the existing Part 121 fleet. We recognize that a few smaller size aircraft designs may have unique compliance issues and may therefore need relief or exemption from the new standards.

We are providing these standards to your Working Group in order to seek the Group's support and to request that you send a like recommendation to FAA for rulemaking.

AIR TRANSPORT ASSOCIATION OF AMERICA, INC.
1301 PENNSYLVANIA AVENUE, NW SUITE 1100 WASHINGTON, DC 20004-1707
202.626.4000 www.airlines.org

It is our intent to present these standards to the ARAC working group on cockpit door design standards and seek its support through ARAC channels. This will address any concerns related to the Advisory Committee Act and allow FAA to proceed with haste to the regulation the industry seeks.

We will contact you in the near future to determine whether FAA foresees any obstacles to this approach.

Thank you for your attention to this proposal and for your assistance in helping industry favorably react to the RRT recommendations.

Very truly yours,

Malcolm B. Armstrong
Senior Vice President
Aviation Safety & Operations
Air Transportation Association

Robert E. Robeson, Jr.
Vice President, Civil Aviation
Aerospace Industries Association

Claude Schmitt
Chairman, Airworthiness Committee
European Association of Aerospace Industries

cc: John Hickey

Attachments: (1) Standard - Pilot Compartment Intrusion Resistance
(2) Standard - Pilot Compartment Penetration Resistance
(3) Letter to ARAC Working Group – Flight Deck Door Standards

ATTACHMENT 1

Subject: PILOT COMPARTMENT INTRUSION RESISTANCE

1. Purpose: This test procedure sets forth an acceptable means, but not the only means, of testing for pilot compartment (also referred to as the flight deck or cockpit) intrusion resistance on transport category aircraft. Intrusion resistance, in this context, refers to the ability to resist forced entry by a person who is not authorized by the pilot in command from entering the flight deck. This test procedure does not change, authorize changes in, or permit deviations from, regulatory requirements.

2. Definitions:

   a. Bolt. A bar which, when actuated, is moved (or "thrown") either horizontally or vertically into a retaining member, such as a strike plate, to prevent a door from moving or opening.

   b. Cylinder. The cylindrical subassembly of a lock, containing the cylinder core, tumbler mechanism and the keyway.

   c. Door Assembly. For the purposes of this test procedure, a door assembly consists of the following parts: door (including any and all panels and mechanisms intended for decompression and/or egress purposes), hinges, locking or other devices, operation contacts (such as handles and knobs), miscellaneous hardware and closures, the frame (including the header and jamb structures plus the attachment to the surrounding airplane structure), and representative structure to which the frame attaches.

   d. Jamb. The fixed vertical members of a doorframe to which the door is secured.

   e. Jamb/Strike. The component of a door assembly that receives and secures the extended lock bolt. The strike and jamb, used together, are considered a single unit.

   f. Jamb/Wall. The component of a door assembly to which a door is attached and secured by means of hinges. The hinges and jamb, used together, are considered a unit.

   g. Latch (or Latch Bolt). A beveled, spring-actuated bolt.

   h. Lock (or Lock Set). A keyed device (complete with cylinder, latch and/or an electrical, pneumatic or mechanical means of preventing normal

operation, strike and trim such as knobs, levers, escutcheons, etc...) for securing a door in a closed position against forced entry.

i. Strike. A metal plate mounted to the doorjamb to receive and hold the latch bolt in order to secure the door to the jamb.

3. Special Considerations: Features of the door, such as hinges and locking mechanisms should not be easily overridden (e.g., insertion of a credit card or prying). The door knob is also susceptible to pulling force, and so should be designed to limit the ability of a person to exert high loads, for example by shape and the use of frangible features.

4. Tests:

a. Applicability: This test procedure applies to all types of flight deck door designs (see Figure 4-1 for examples).

b. Intent:

(1) The intent of these tests are to demonstrate that a flight crew compartment door assembly will resist the unauthorized entrance of a person. Although not intended to be tested, the bulkhead or other barriers that separate the flight deck from the passenger cabin must also meet the requirements set forth in this test procedure.

(1) With respect to intrusion resistance, the size and location of the panel are the key factors in determining whether or not it affords intrusion resistance. Panels that are small and are located at the extreme bottom or top of the door are typically less vulnerable to intrusion.

(2) With respect to ballistic penetration resistance, if the openings created by the blow-out panels do not permit a Hazardous Trajectory (as defined in the Pilot Compartment Penetration Resistance test procedure), they would be acceptable.

e. Standardized Test Procedures. The tests described are standardized procedures that are generally to be regarded as the minimum necessary to demonstrate compliance with the intrusion resistance requirement.

5. General Requirements: There are four basic requirements for the door, as noted in Table 5-1. These address resistance to impacts on the door, its locking bolt and hinge, and resistance to forcible opening by pulling on the doorknob or handle. A new specimen may be used for each of the four test conditions.

Table 5-1. Test Requirements for Door Assembly

Test	Test Method	Measured Parameter	Requirement
Door Impact	6.d.1	Impact resistance of door	2 blows of 300 J (221.3 ft-lbf)
Bolt Impact	6.d.2	Impact resistance at bolt	2 blows of 300 J (221.3 ft-lbf)
Hinge Impact	6.d.3	Impact resistance at hinge	2 blows of 300 J (221.3 ft-lbf)
*Pulling	6.d.4	Pulling resistance at doorknob or handle	A tensile load of up to 250 lbs., or until handle no longer supports load.

* Doors that do not open in a conventional manner, that is, don't swing on hinges, such as pocket doors, should have the pulling force applied with respect to the opening direction of the door. In this case, the pocket door would require loading in a transverse direction. Such procedures should be agreed to with the test conductor.

6. Test Methods:

a. Test Equipment.

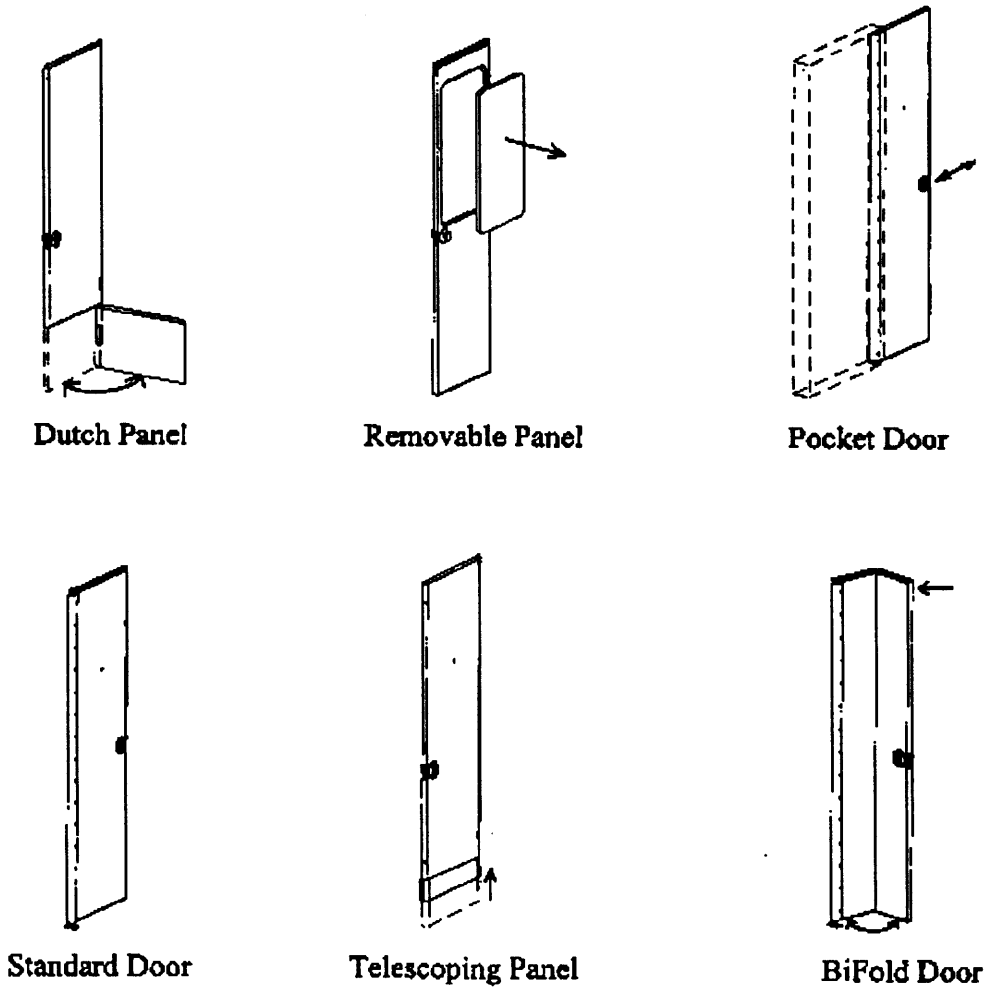

Figure 4-1. Examples of Door Types and Features

(2) Although the door is intended to resist forced entry, it is recognized that the door is one element of several inflight security measures that work in conjunction with one another.

c. Features: Features of the door (such as telescoping panels, Dutch panels, removable panels, etc. (see Figure 4-1)) designed to comply with or to aid in the compliance of decompression or egress requirements, do not require testing if their failure would not appreciably degrade the intrusion or ballistic penetration resistance offered by the flight deck door. If this cannot be shown, testing will be required.

(1) The door ram shall be a pendulum system with a steel weight of at least 45 kg (99.2 lb), capable of delivering horizontal impacts of at least 300 Joules (221.3 ft-lbf). Figure 6-1 illustrates the arrangement of this pendulum system in both the pre-release and impact position. The ram is a steel cylinder 15.2 cm (6 in) in diameter and 39.4 cm (15.5 in) long. The striking end of the weight shall be hemispherical and have a diameter of approximately 15.2 cm (6 in), as shown in Figure 6-2. The impact nose used in this equipment can be made from cast epoxy-polyamide resin. However, any durable impact resistant material is satisfactory. The suspension system for the door ram consists of four flexible steel cables providing a swing radius of 171 cm (5.61 ft), also shown in Figure 6-2. These cables are adjusted to equal length through turnbuckles such that the ram swings in a straight, true arc and are attached to a rigid frame that is adjusted to level.

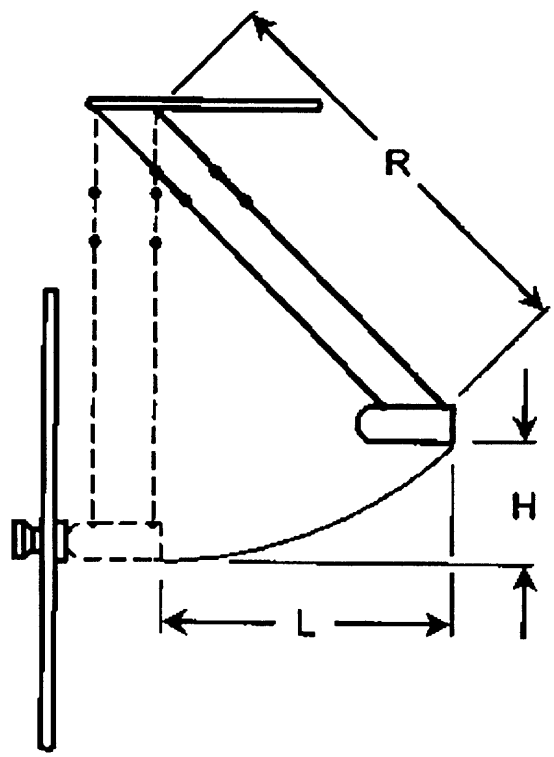

$$H = R - \sqrt{R^2 - L^2}$$

Figure 6-1. Door Ram Pendulum System

(2) It is convenient to clamp the pendulum system to the forks of a forklift truck, which allows rapid horizontal and vertical adjustment of the impact point of the ram. A winch and snap ring system may also be used to raise and pull back the door ram. The use of a calibrated elevation stand is a convenient means of quickly and reproducibly establishing the proper ram elevation for each required impact.

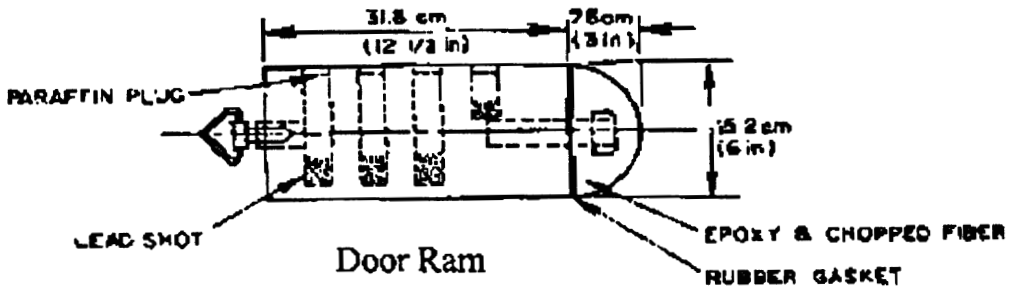

Door Ram

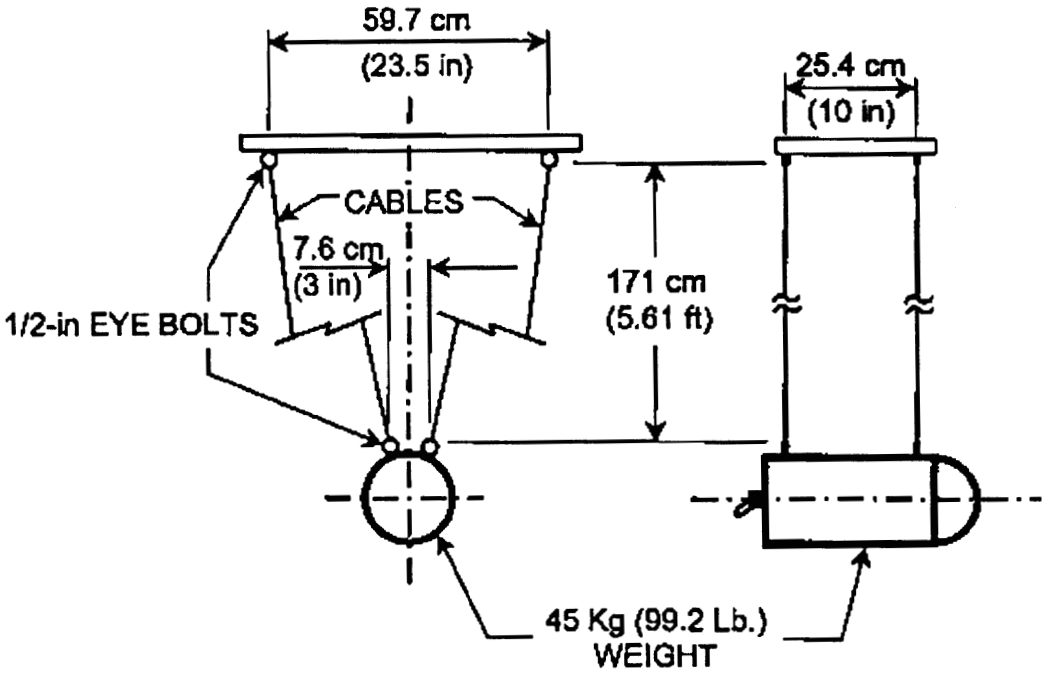

Suspension System

Figure 6-2. Door Ram and Suspension System

(3) The impact energy shall not be less than the prescribed value.

(4) The door-handle pulling equipment shall be capable of attaching to the doorknob or handle and providing the required tension load without slippage. The equipment may be hydraulic or mechanical and must include a load cell, strain gauge or other calibrated load-measuring device.

b. Door Assembly Support Fixture. The fixture for door assembly tests shall consist of representative airplane framing members and representative wall structure, providing rigid, transverse restraint around the periphery of the assembly. The restraint provided by this fixture shall simulate the rigidity provided to a door assembly in the airplane by the ceiling, floor and walls. The test-panel fixture should not provide a significant increase in damping or energy absorption compared to the airplane configuration. The fixture should not artificially contribute to the performance of the door. Figure 6-3 shows an example test fixture.

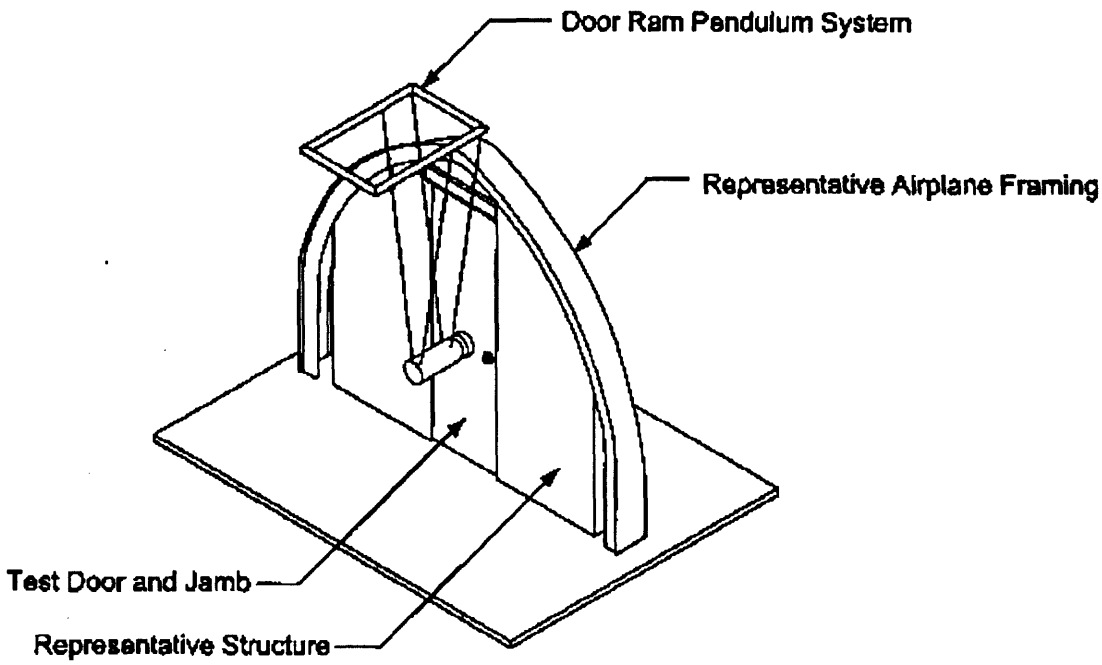

Figure 6-3. Door Assembly Support Fixture

c. Test Preparation. The door assembly shall consist of the door and doorknob or handle and all relevant components, such as locks, jambs, etc. Attach and orient this assembly to the Door Assembly Support Fixture as it will be installed in the airplane, with the door ram on the passenger cabin side.

(1) Ambient Test Conditions.

Ambient conditions of the test range will be maintained at:

Temperature: 21° C ± 2.9° C (70° F ± 5° F);
Relative humidity: 50% ± 20%

No additional environmental effects need be considered for the test.

(2) Test Specimens.

The test specimens shall be manufactured using the materials and manufacturing processes used for production parts. A sufficient number of specimens will be provided to accomplish all tests. They will be conditioned to ambient conditions for at least 24 hours prior to testing unless the materials used are shown to be insensitive to variations in temperature and humidity.

d. Test Procedures.

(1) Door Impact Test.

(a) Prepare the test specimen in accordance with paragraph 6.c. and lock the door in the closed position. Set up the door ram pendulum weight (paragraph 6.a.1.) so that its axis is horizontal and perpendicular to the face of the door at the point determined to be the most critical for door strength and distortion from impact, accounting for door design and load reaction points. If the door is of uniform construction, the impact point may be defined by the intersection of the vertical centerline of the door and a line from the center of the bolt at the door edge to the center of the mid-height hinge, or the mid point between hinges when the door is hung with two hinges, or

horizontally across the door if the door is hung with a continuous hinge or integrated hinge

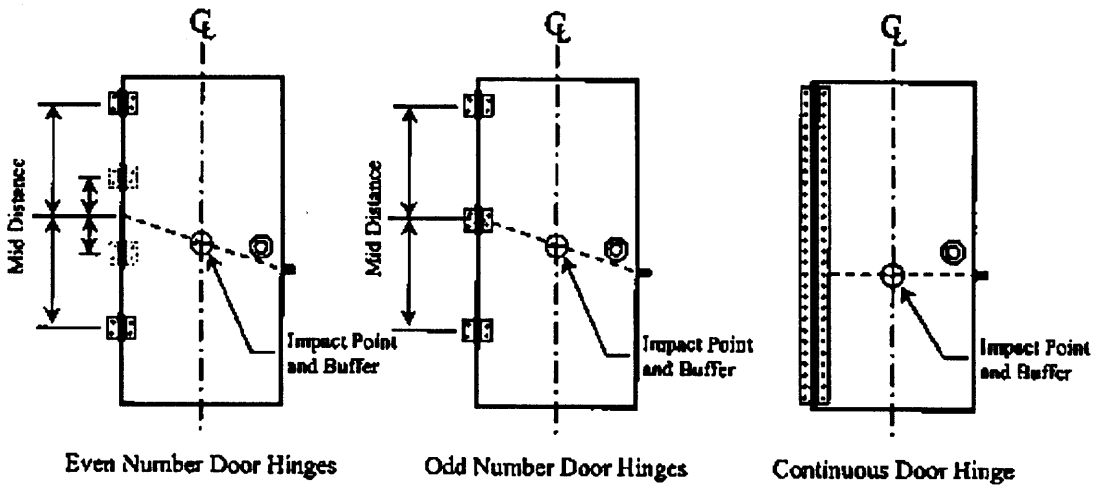

Figure 6-4. Door Impact Test Location for Different Hinge Configurations (Uniform Door Design)

pins. (See Figure 6-4).

(b) Attach to the door, centered on the impact point, an impact buffer with a diameter no greater than 15.2 cm (6 in) and a thickness no greater than 5 cm (2 in). The recommended buffer material is a 25.6 Kg / m^3 (1.6 Lb / ft^3) rigid, cellular, polystyrene thermal insulation (ASTM Standard Specification C578-00 Type IV). Other buffer materials may be used provided they have similar response characteristics in terms of energy losses, peak impact loads and rise times. Position the door ram such that its striking nose just touches the surface of the buffer when at rest. Pull back the pendulum weight to a drop height (H) of 68 cm (2.23 ft) and horizontal swing distance (L) of 136.5 cm (4.48 ft) to produce the required energy of 300 Joules (221.3 ft-lbf) and release. Subject the same test specimen to two impacts, attaching a new buffer for each impact.

This test procedure assumes consistent structure throughout the door panel. Any significant detail variations may require further substantiation.

(2) Bolt Impact Test.

(a) Prepare the test specimen in accordance with paragraph 6.c. and lock the door in the closed position. Set up the door ram pendulum weight (paragraph 6.a.1.) so that its axis is horizontal and perpendicular to the face of the door at the point 8.9 cm (3.5 in) from the door edge and horizontally inline with the door bolt. If the doorknob interferes with the impact point, the impact point may be moved vertically above or below the doorknob, whichever is closer to the bolt. (See Figure 6-5).

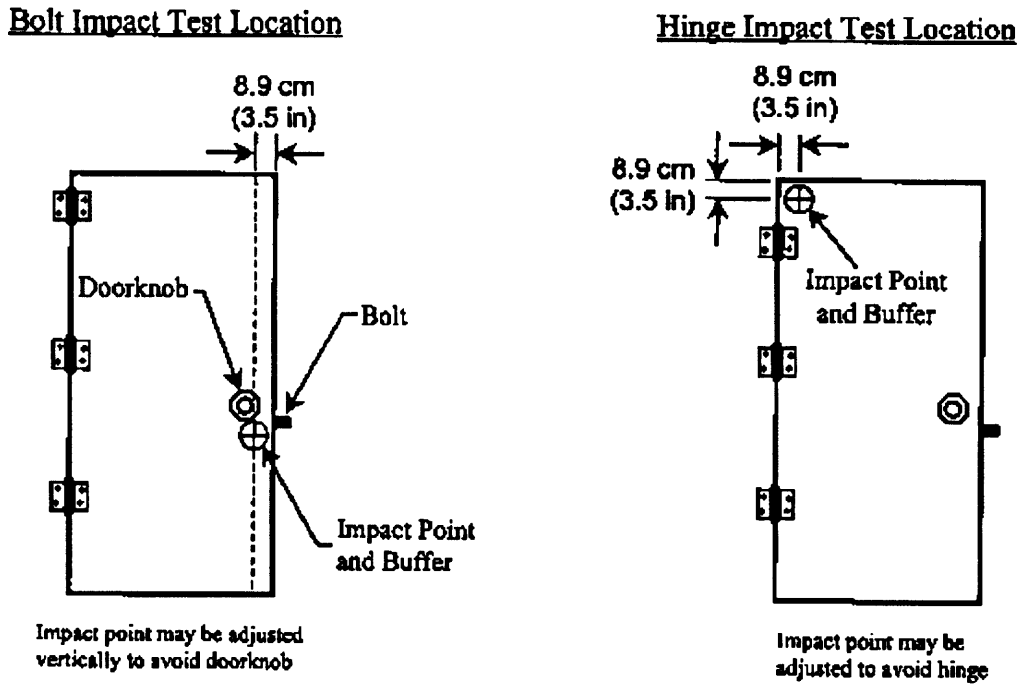

Figure 6-5. Impact Test Locations for Doorknob and Hinge

(b) Attach to the door, centered on the impact point, an impact buffer with specifications provided in paragraph 6.d.(1)(b) and perform the impact tests also specified in that paragraph.

(3) Hinge Test.

(a) Prepare the test specimen in accordance with paragraph 6.c. and lock the door in the closed position. Set up the door ram pendulum weight (paragraph 6.a.1.) so that its axis is horizontal and perpendicular to the face of the door at the point 8.9 cm (3.5 in) down from the top door edge and 8.9 cm (3.5 in) in from the vertical door edge containing the door hinge (Figure 6.5). If the hinge interferes, the impact point may be moved as agreed to with the test conductor.

(b) Attach to the door, centered on the impact point, an impact buffer with specifications provided in paragraph 6.d.(1)(b) and perform the impact tests also specified in that paragraph.

(4) Pull Test.

(a) Prepare the test specimen in accordance with paragraph 6.c. and lock the door in the closed position. Attach the tension-loading device (paragraph 6.a.4) to a rigid support in front of the handle or knob on the cabin side of the door and align the pulling axis to match the initial door opening direction. Attach the tension loading device to the handle or doorknob by means which will require minimum alteration of the doorknob or handle (i.e., friction devices, drilling holes, cutting slots, etc.) ensuring that it will not slip during the test.

(b) Apply a minimum tensile load of 250 pounds to the knob or handle for three seconds or until

the knob or handle separates from the door, whichever occurs sooner. Where design features would not permit a 250-pound tensile load to be applied by a person, an artificial method of applying the load may be necessary.

7. Failure Criteria: The door assembly fails a test if:

   a. The door is forced open by any of the test impacts to the door, bolt or hinge area, or from the tensile load applied to the knob or handle .

   b. A person can easily enter, relatively unimpeded, from the outside, through portions of the door even though it might not be possible to open the door.

   c. The failure of the door handle enables the door to be readily opened.

8. Design Variation: Variations in design will not necessarily require testing if it can be shown by rational, comparative analysis that the new design will meet the pass/fail criteria.

9. Documentation: Test details including test setups, equipment, drawings, photographs, video tapes, test results, etc. for all tests are to be documented and maintained by the test facility and made available upon request to authorized entities.

ATTACHMENT 2

Subject: PILOT COMPARTMENT PENETRATION RESISTANCE

1. APPLICABILITY. This test procedure sets forth an acceptable means, but not the only means, of testing for pilot compartment penetration resistance. This test procedure does not change, authorize changes in, or permit deviations from, regulatory requirements.

2. DEFINITIONS. Terms that are unique to ballistic testing and firearms, or may not be in general usage.

   a. Angle of Incidence. The angle between the line of flight of the bullet and the perpendicular to the front surface of the barrier (see Figure 2-1).

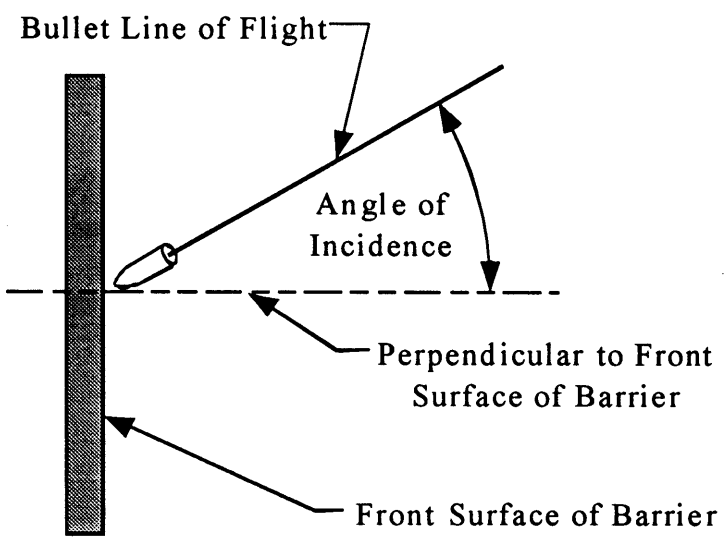

Figure 2-1. Angle of Incidence

   b. Full Metal Jacketed Bullet (FMJ). A lead core bullet completely covered with a copper alloy jacket (approximately 90 % copper and 10 % zinc) except for the base. Total Metal Jacket (TMJ), Totally Enclosed Metal Case (TEMC), and other commercial terminology for bullets with electro-deposited copper and copper alloy coatings are considered comparable to Full Metal Jacketed (FMJ) bullets.

c. Hazardous Trajectory. A shotline, from any ballistic threat, originating from any passenger-accessible compartment that passes through the flight-critical zone defined by flight-crew positions, flight-critical instrumentation or flight-critical systems within the flight deck. See Figure 2-2.

d. Jacketed Hollow Point Bullet (JHP). A lead core bullet with a hollow cavity or hole located in the nose of the bullet and is completely covered with a copper-alloy jacket (approximately 90 % copper and 10 % zinc), except for the hollow point.

e. Penetration, Complete. Full passage of a bullet or bullet fragment through a test panel without being reduced to zero velocity.

f. Penetration, Partial. An impact to a test panel in which the bullet and all of its fragments are brought to zero velocity. Any portion of the bullet may protrude from the test panel.

g. Reference Bullet Velocity. The designated impact velocity.

h. Round Nose Bullet (RN). A bullet with a generally blunt or rounded nose that may have a small flat surface at the tip of the nose.

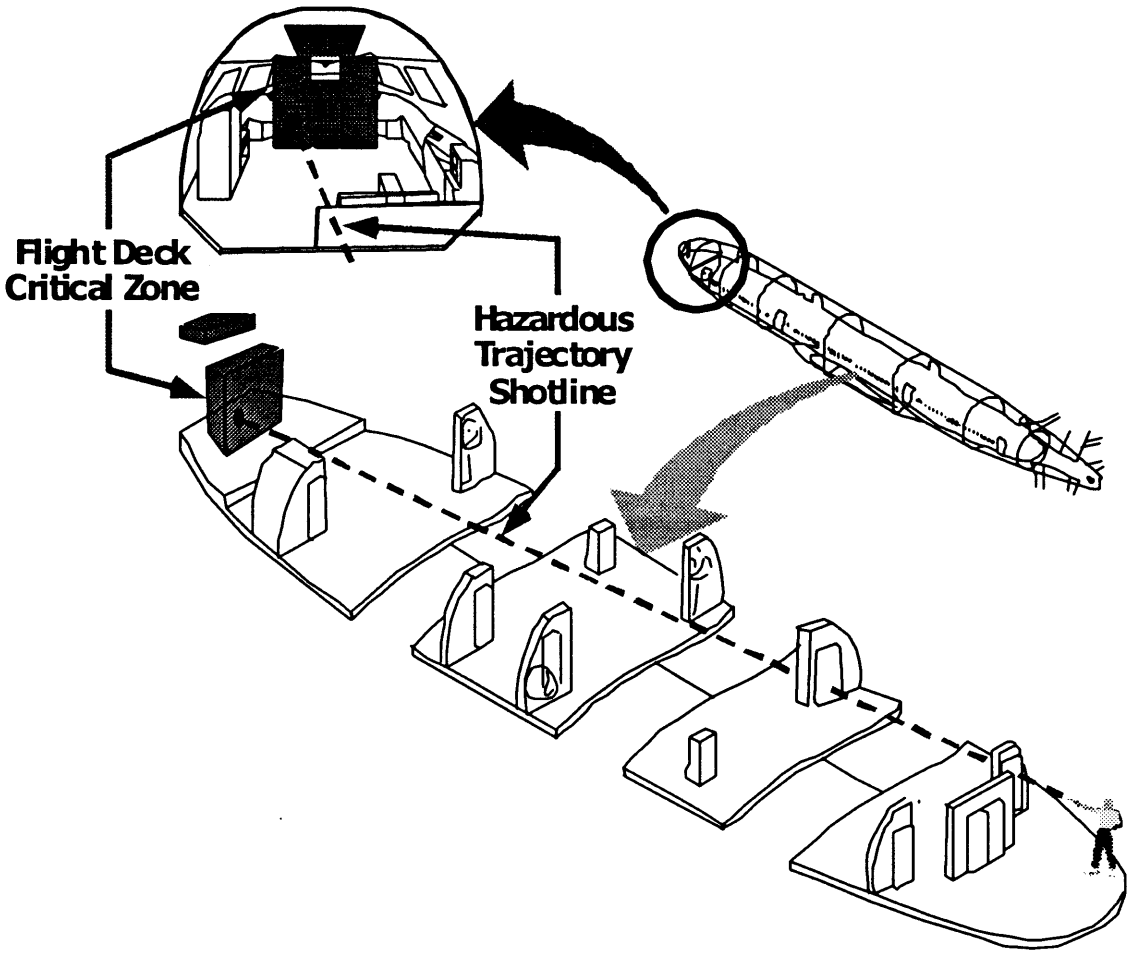

Figure 2-2. Example of a Hazardous Trajectory (Shotline Intersects Within the Critical Zone of the Flight Deck)

i. Test Panel. The protective barrier, consisting of ballistic resistant materials, that is representative of production structure that shields the flight deck from potential ballistic threats and is used to demonstrate actual capability in resisting projectile penetrations. It has representative arrangements and features, as they will appear on the airplane.

3. OBJECTIVE. Regions of the pilot compartment that are vulnerable to ballistic threats originating from passenger compartments will be protected from small-arms projectiles and fragment debris from hand grenades (kinetic-energy weapons).

(a) The intent is to ensure that safe flight and landing is not compromised through discharges of a firearm or fragmenting device.

(b) Protection is expected to occur at the flight deck door assembly if on a hazardous trajectory from a passenger compartment. Boundary segments that are not on a direct hazardous trajectory or can only become hazardous from ricochets need not be resistant to ballistic penetrations. In determining trajectories, it may be assumed that weapon discharges or fragmentation devices will only be a threat from any normal passenger-accessible location.

(c) Features of a door, such as decompression panels, louvers, doorknobs, latches, hinges, lugs and peepholes, where it can be shown that their failure would not degrade the penetration resistance of the door, do not require testing.

(d) Joints between panels should not have gaps, or should be protected from penetration by, for example, an overlapping of protective material.

4. PRINCIPLES and TECHNIQUES. Several materials and concepts, designed to defeat ballistic threats, have been evaluated. Useful materials include metallic alloys, ceramics, polymers, strong fibers and composites. For lightweight and relatively low-energy applications, strong fibers, sometimes coated in a matrix material, appear to offer the best protection.

Fibers woven into a fabric have proven to be especially tough. Fabric mesh or tightness of weave (yarns / inch) also has an effect on performance but limited data suggests that this effect is minor when compared against specific energy absorbed (energy / areal density).

The size and shape of the projectile also affects material response. Blunt and rounded bodies are more easily stopped than sharp-edged or pointed fragments. Sharp-edged or pointed fragments tend to cut the material or separate the material more easily than blunt objects. The larger the fragment, the more fibers that have to be broken before penetration can occur.

The technique used to secure the fabric to its supports can have a significant effect on energy absorption. A fabric entirely glued to a surface or encased in a resin matrix normally is unable to yield or dissipate as much energy as a fabric that is only restrained at its outer boundaries. The data even suggests that restraining the fabric only at opposite ends instead of all four sides is appreciably better. The more flexible the attachment, the better able the material is to stretch and redistribute loads over larger areas and dissipate more energy through friction and deformation. Increasing distance between attachment points has also been shown to be beneficial since more material deforms and energy can dissipate over larger areas.

Combining multiple layers of fabric can also improve energy absorption more than the sum from individual layers. The interaction of overlaid materials disperses additional energy through friction.

It would also be expected that two fragments with the same basic shape and of equal energies but with different masses would perform differently. The higher velocity fragment would be more easily stopped than the slower fragment. This is expected because of higher momentum exchange to the fabric (energy losses from accelerating the fabric) and higher strain rates, which normally delay material failures.

Certain ballistic fabrics lose some ballistic resistance when wet, but fully recover upon drying. Laboratory tests of ballistic fabrics soaked in water have displayed reductions in ballistic resistance of more than 20 percent compared with identical dry fabrics. Since full strength returns after drying and the flight deck operates within normal humidity ranges, testing the installed shielding in a soaked condition is not required.

Based on material selection, configuration and installation arrangement, areal densities less than one pound per square foot should be achievable for shielding protection against the defined threat in this test procedure.

A series of tests will require projectile impacts at both perpendicular and at an angle of incidence to the surface because most random shots would unlikely hit exactly perpendicular to the surface. Some fabrics offer lower protection by as much as 20 percent when a bullet strikes at an angle. The shielding must provide the minimum level of protection, regardless of the angle of impact.

Limited studies of ballistic-resistant capabilities of armor under extended periods of use were conducted in 1983. Some of the armor tested had been in service for more than 8 years. This testing and a 1986 study by NIJ (*Ballistic Tests of Used Body Armor*) found that age alone does not degrade the ballistic properties of armor. Armor manufactured in 1975 that remained in inventory without issue exhibited ballistic-resistant properties identical to those at the time of manufacture. Both research studies included armor that had been in use for as long as 10 years and had ballistic properties that were indistinguishable from those of unused armor manufactured at the same time. Age is therefore not considered to be a significant factor for ballistic resistance.

5. TEST CRITERIA.

   a. Standardization. The National Institute of Justice (NIJ), a research, evaluation and development branch under the U.S. Department of Justice, advanced a voluntary national procedure to provide minimum

performance requirements for soft body armor. The requirements and means to demonstrate compliance for this test procedure were based, in part, from this nationally recognized standard and are found in NIJ Standard-0101.04. This is the fourth revision since its original release in March 1972 and was issued in September 2000. Although NIJ may continue to revise that standard, these criteria are based on the NIJ Standard-0101.04.

b. Applicability. NIJ Standard-0101.04 specifically addresses protection of the torso from ballistic threats. Since the intent of this test procedure is to protect the flight deck and not body torsos, various requirements within the NIJ standard are not integrated into this document.

c. Classification. The NIJ standard identifies seven levels of protection through a type classification. Type IIIA is an acceptable levelof ballistic protection This level offers protection against most handguns and is considered to provide an adequate level of protection from fragmentation devices as well as the Type I, IIA, and II threats. Demonstration of penetration resistance for Type IIIA rounds is accomplished with two different projectiles.

(1) Demonstration Projectile #1. 9 mm full metal jacket, round nose (FMJ RN) bullet with nominal mass of 8.0 g (124 grain) and reference velocity 436 m/s (1,430 ft/s)

(2) Demonstration Projectile #2. .44 Magnum, jacketed hollow point (JHP) bullet with nominal mass of 15.6 g (240 grain) and reference velocity 436 m/s (1,430 ft/s)

6. COMPLIANCE DEMONSTRATION. Compliance with the objectives of this document may be shown by analysis, tests, or by comparison with previously approved configurations. If tests are used to demonstrate compliance, specimens must be representative of the arrangements used on the airplane. All configurations must be tested, unless the performance of the configurations not tested is rationally shown to be equal or better. Previously approved test data may be used as a basis for compliance for other airplane configurations provided that their applicability is demonstrated in a rational manner. However, features such as decompression panels, louvers, doorknobs, latches, hinges, lugs and peepholes should be addressed as discussed in paragraph 3.c.

Validation tests are not required if the ballistic performance of the configuration will meet the requirements based on comparative analysis, provided that the methods used are shown to be rational. In order to demonstrate compliance without a test, the following factors must be assessed to show that the fabrication and/or installation have not degraded the material performance:

- Material properties

- Fabric weave (direction and density) – if applicable
- Material thicknesses and Interactions (multiple plies)
- Attachment arrangements and supporting structure
- Energy absorption methods
- Fabrication of the surfaces affected (e.g., door, bulkhead etc.)

a. Test Procedures. This procedure provides an acceptable method to demonstrate adequate protection for the flight deck against ballistic threats. The tests demonstrate the ability of the shield to prevent bullet penetrations with a pass/fail criterion. In order to pass, all portions of the projectile must be brought to zero velocity by the shielding on each of the required tests. Partial penetrations of the bullet through the shielding are acceptable.

(1) Hand loads. Hand-loaded ammunition may be used on any of the tests. Adjustments are normally made to powder quantity to assure velocity requirements are met.

(2). Test Barrels. Use of test barrels or actual weapons appropriate for the ammunition are acceptable provided that impact locations, projectile orientations and impact velocities can be maintained.

(3) Ambient Test Conditions. Ambient conditions of the test range will be maintained at:

(i) Temperature: 21° C ± 2.9° C (70° F ± 5° F);
(ii) Relative humidity: 50% ± 20%;
(iii) No additional environmental effects need be considered.

(4) Test Specimens. Test specimens shall be manufactured using the materials and manufacturing processes used for production parts. A sufficient number of specimens will be provided to accomplish all tests. They will be conditioned to ambient conditions for at least 24 hours prior to testing unless the materials used are shown to be insensitive to variations in temperature and humidity.

(5) Timing Screens. Projectile impact velocities will be measured on every test. Any system that can measure velocities to within 3 m/s (10 ft/s) are acceptable. Individual recording devices must be capable of discriminating to 0.3 m/s (1.0 ft/s) or 0.1 microseconds (10^{-7} seconds). Recommended velocity measuring equipment includes:

(i) Photo electric light screens;
(ii) Printed make circuit screens;
(iii) Printed break circuit screens; or

(iv) Ballistic radar

(6) Timing Screen Arrangement. The first timing screen will be placed a minimum of 2 m (78.7 in) from the end of the test barrel (see Figure 6-1). The second screen will be placed 1.5 m (59.05 in) ± 6 mm (0.24 in) from the first screen. The test specimen will be placed 5 m (196.85 in) ± 25 mm (1.0 in) from the end of the test barrel. The screens will be arranged so they define vertical planes perpendicular to the line of flight of the bullet. They will be securely mounted to maintain their required

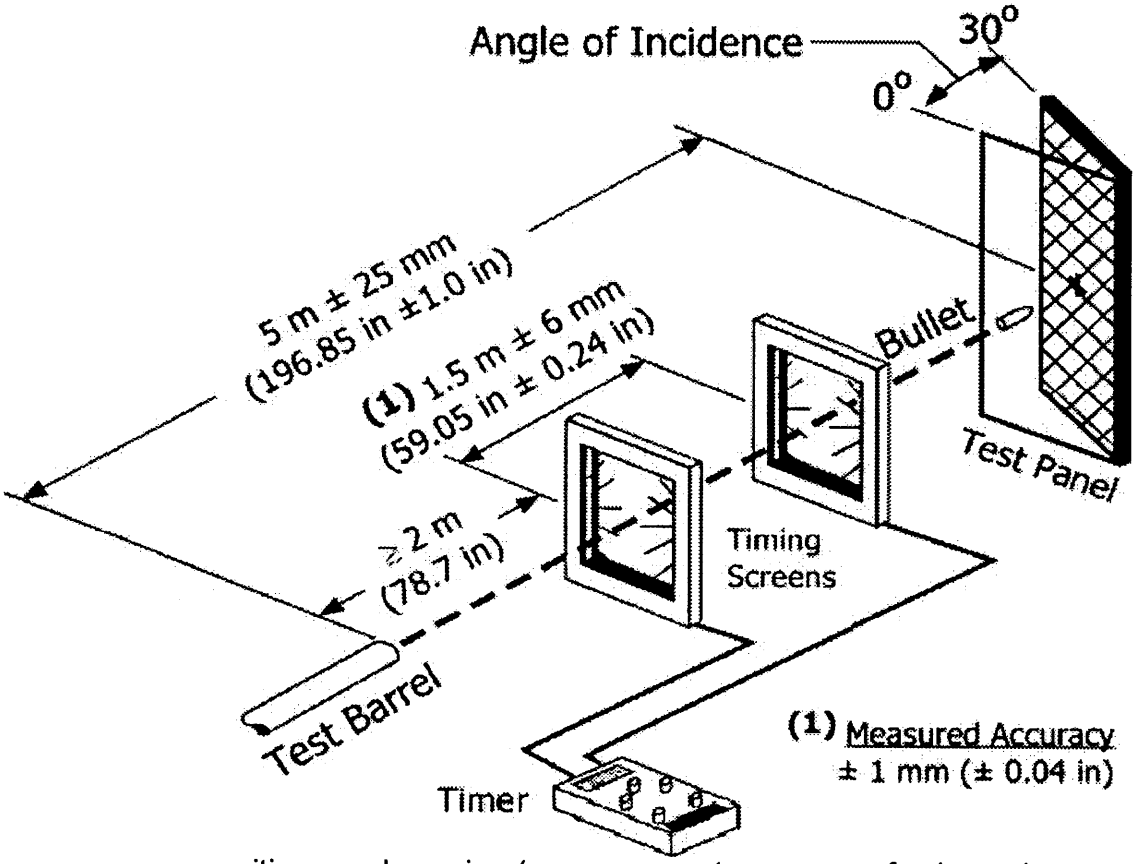

positions and spacing (measurement accuracy of ± 1 mm (± 0.04 in)).

Figure 6-1. Test Arrangement for Ballistic Test Panels

Although the spacing between the gun barrel and the test panel is substantial (5 meters), this is neither indicative nor representative of the distances that may be experienced from an actual in-flight incident. Design considerations must assume that weapon use may occur at distances ranging from point-blank range to the length of the passenger cabin. The

test evaluation distances were selected as compromises for competing requirements.

(7) Test Panels. Through-thickness construction of the test panels should not be greater than the minimum configuration to be used in service. The test panels may be simplified with respect to peripheral size, geometry and boundary conditions. It must be shown that the simplifying assumptions are rational and lead to a conservative representation when compared to the actual airplane configuration. The test-panel fixture should not provide a significant increase in damping or energy absorption compared to the airplane configuration. Six impact sites will be identified on the test panel for the first ammunition type. These sites will be uniformly spaced throughout the panel with no site closer than 76 mm (3.0 in) from center of impact to any edge of the protection shield and 51 mm (2.0 in) measured center-to-center between any two impact sites. If space is available on the test panel, using the same criteria, the next six sites for the second ammunition type can be identified for the second test series. Otherwise, a new test panel will be required. If the mechanism for stopping projectiles is lost after any shot, replacement panels may be used to complete the test series. However, the same relative impact locations must continue to be employed, as previously assigned. The test panels will be tested in dry conditions.

(8) Test Shots. Table 6-1 provides the test conditions required to demonstrate compliance. The shielding devices are required to prevent penetration from the impact of six bullets at the designated velocities and locations for two ammunition types. Two of the impacts in each six-shot sequence must be at a 30° angle of incidence. After each shot, the panel will be inspected to determine if the projectile was fully arrested and either a pass or failure will be recorded. The velocity will also be computed and recorded. If the velocity is less than the minimum acceptable or the impact site is outside of the allowable limits, a retrial may be necessary. The projectile may be removed, if desired, before subsequent shots.

Table 6-1. Performance Test Summary

Test Round	Test Bullet	Bullet Weight	Bullet Diameter	Reference Velocity	Hits at 0° Angle of Incidence	Hits at 30° Angle of Incidence	Shots per Panel	Total Shots Required
1	9 mm FMJ RN	8.0 g (124 grains)	9 mm (.355 in)	436 m/s (1430 ft/s)	4	2	6	12
2	.44 Magnum JHP	15.6 g (240 grains)	10.9 mm (.429 in)	436 m/s (1430 ft/s)	4	2	6	

7.PASS/FAIL CRITERIA. To be a valid shot, several criteria must be met. The bullet must impact the panel at an angle of incidence ± 5° from the intended angle of incidence, at a yaw angle (of the bullet) within ± 5°, at an impact velocity within ± 9.1 m/s (30 ft/s) of the reference test velocity and no closer to an edge or adjacent impact site than given in paragraph 6.a.(7). If all conditions are met and the impact velocity equals or exceeds the velocity limit without penetration, it is considered a pass. If all conditions are met except the impact velocity occurs at or less than the velocity limit, with penetration, it is considered a failure. If all conditions are met but penetration occurs above the velocity limit, a retrial may be performed without making any design changes.