123170

DETR
ENVIRONMENT
TRANSPORT
REGIONS

01 FEB 28 AM 10:52

DEPARTMENT OF THE ENVIRONMENT
TRANSPORT AND THE REGIONS

VEHICLE STANDARDS AND ENGINEERING

2/02 GREAT MINSTER HOUSE
76 MARSHAM STREET
LONDON SW1P 4DR
TELEPHONE: +44 (0)20 7944 2086
FAX: +44 (0)20 7944 2069
EMAIL: geoff_harvey@detr.gsi.gov.uk

Mr Stephen R Kratzke
Associate Administrator
Safety Performance Standards
National Highway Traffic Safety Administration
Department of Transportation
400 Seventh Street, SW
Washington, DC 20590
United States of America

12 February 2001

Dear Mr Kratzke

Docket No.NHTSA-00-8011 -9

As Chairman of the ad-hoc group which was set up by the Group of Experts for Brakes and Running Gear (GRRF) of the United Nations Economic Commission for Europe (UNECE) to consider the global harmonisation of performance requirements and other aspects for tyres, I wish to submit the attached document for consideration in connection with your future Notices of Proposed Rulemaking outlined in the above Docket.

The group is working under a remit from Working Party 29 (WP.29) and under the terms of the UNECE 1998 Agreement to which the United States of America is a signatory. The group comprises representatives of the Governments of Canada, Japan, the Netherlands, the United Kingdom and the United States of America, plus senior technical delegates from the tyre manufacturing industries as representatives of the trade organisations of Europe (the European Tyre and Rim Technical Organisation – ETRTO), Japan (the Japanese Automobile Tire Manufacturer's Association – JATMA) and the United States of America (the Rubber Manufacturer's Association – RMA and the Tire and Rim Association of America – TRA).

There have been five meetings of the group to date, with the latest meeting being held in London from 4 to 6 December 2000. The document attached, Issue 6 of the Draft Harmonised Provisions Concerning Pneumatic Tyres for On-Road Vehicles, represents the state of the discussions following this meeting but not necessarily, as yet, a consensus on all issues. There will be further discussion regarding certain performance tests, marking (labelling) requirements and so on and the next scheduled meeting of the group is in Ottawa on 13/14/15 June 2001.

The draft is laid out on the basis of a core of requirements which will be mandatory and concern issues such as marking, dimensional control and performance requirements, for example, carcass strength, bead unseating, low and high speed endurance plus requirements for the incorporation of treadwear indicators. In addition there are optional annexes which contain provisions for other aspects which may be required only in some countries, such as harmonised provisions for tyre wet grip with the possible addition of future annexes dealing with provisions for tyre to road noise emissions and tyre rolling resistance for example. Because of the differences in the systems of regulatory control between the USA and Europe, that is Self Certification compared with Third Party Type Approval and subsequent Conformity of Production, there is an Annex which lays down the procedure for the Type Approval approach and a final Annex dealing with issues related to the fitting and use of tyres on vehicles. At the third meeting of the group it was decided that the draft should be directed initially towards requirements for tyres designed primarily for use on passenger cars but it is laid out in a form where it is reasonably easy to incorporate future requirements for tyres designed primarily for trucks and for motorcycles.

The group recognises the difficulties faced by the USA Administration following the recent tyre problems and is anxious to submit its work in an effort to assist the Administration and to maintain the initiatives and the goal of achieving global harmonisation of regulations as a declared intent of the USA in an extension of the Trans-Atlantic Business Dialogue between the USA and Europe.

Yours sincerely

Geoff Harvey
Chairman of the ad-hoc group, Global Harmonisation of Tyre Regulations, UNECE.

DRAFT HARMONISED PROVISIONS CONCERNING PNEUMATIC TYRES FOR ON-ROAD VEHICLES

0 INTRODUCTION

The intention of this Regulation is to introduce harmonised requirements for physical dimensions, marking, performance aspects and installation and use of tyres which are primarily designed for vehicles used on the road. The Regulation will be formulated in stages with the first stage dealing with tyres of a group primarily designed for use on passenger carrying vehicles having up to eight seats not including the driver. Subsequent stages will deal with requirements for tyres of a group primarily designed for use on vehicles for carrying goods or for passenger carrying vehicles having more than eight seats not including the driver and for tyres of a group primarily designed for powered, self-propelled two wheel vehicles. There are therefore, sections of the Regulation, such as
"3 - Definitions" which are already comprehensive and will contain information not directly applicable to this first stage.

The Regulation is formulated on the basis of requirements which are considered to be essential in all territories and are therefore mandatory, plus optional, but harmonised, provisions for aspects which may be required only by certain territories, for example, wet grip and future introduction of controls on tyre to road noise emissions.

There are also optional provisions for a harmonised system of third party approval of tyres for territories applying this form of regulatory control.

1 SCOPE

The provisions contained in this Regulation apply to new pneumatic tyres primarily designed for all powered, self-propelled, motor vehicles and their trailers, designed, intended or adapted for use, or used, on the road.

They do not, however, apply to:

- tyres *intended to be fitted to powered, self-propelled motor vehicles first used before* 1975;

- tyres primarily designed for fitting to vehicles intended or adapted for agricultural, horticultural or forestry purposes;

In addition, at this stage they do not apply to:

- tyres of a group primarily designed for use on vehicles for carrying goods or for passenger carrying vehicles having more than eight seats not including the driver;

- tyres of a group primarily designed for powered, self-propelled two wheel motor vehicles;

- tyres remanufactured by applying new tread material (retreading).

The Regulation specifies Definitions for tyre and tyre test characteristics, Mandatory tyre requirements for all territories including provisions for Manufacturer registration, Marking (labelling), *Construction and performance requirements including* Dimensions requirements, Strength test requirements, Tubeless tyre bead unseating resistance requirements, Low and High speed endurance requirements and the provision of Treadwear indicators as applicable.

In addition the Regulation specifies Harmonised optional requirements for wet grip (traction) and Requirements for the UN ECE type approval system of third party approval of tyres for territories applying this form of regulatory control. There is also an Annex dealing with Issues relating to the installation and use of tyres on vehicles.

2. CONTENTS

3 Definitions	*Page 5*
3.1 General definitions for the tyre and wheel	Page 5
3.2 Definitions related to tyre construction	Page 8
3.3 Definitions associated with testing and faults	Page 8
Appendix 1 Speed category table	Page 10
Appendix 2 Load index (LI) table	Page 11
Appendix 3 Rim diameter code table – "d" symbol	Page 12
Appendix 4 Relationship between the PSI index code and inflation Pressure	Page 13
Annex 1 Mandatory tyre requirements for all territories	Page 14
1 Manufacturer registration	Page 14
2 Marking (labelling)	Page 14
3 Construction and performance requirements	Page 19
3.1 Car tyres	Page 19
3.1.1 Dimensions requirements	Page 19
3.1.2 Strength test requirements	Page 21
3.1.3 Tubeless tyre bead unseating resistance test requirements	Page 22
3.1.4 Low speed endurance test	Page 23
3.1.5 High speed endurance test	Page 23
3.1.6 Treadwear indicators	Page 23
Appendix 1 Test procedure for measuring tyre dimensions	Page 24
Appendix 2 Strength test procedure - Car tyres	Page 25
Appendix 3 Tubeless tyre bead unseating resistance test procedure - Car tyres	Page 27
Appendix 4 Low speed endurance test procedure – Car tyres	Page 31
Appendix 5 High speed endurance test procedure – Car tyres	Page 33

Annex 2A Optional harmonised requirements for wet grip (traction) Page 35

Appendix 1 Test procedure for establishing wet grip performance Page 36

Annex 3 Requirements for UN ECE Type Approval system Page 39

Appendix 1 Communication Page 43

Appendix 2 Information document in respect of application for approval to Annex1 and/or Annex 2A Page 44

Annex 4 [Issues related to the selection and installation of tyres New Vehicles] Page 46

Appendix 1 Maximum application load capacity – Car tyres Page 49

Appendix 2 Braking and deviation test for vehicles fitted with temporary use spare tyres Page 50

3. DEFINITIONS

For the purpose of this regulation the following definitions apply:

3.1 General definitions for the tyre:

3.1.1 Pneumatic tyre means a form of tyre comprising a reinforced flexible envelope which is either provided with, or forms in conjunction with the wheel upon which it is mounted, a continuous, closed, essentially toroidal chamber containing a gas, (usually air), or gas and a liquid, which is intended to be used at a pressure greater than atmospheric pressure. [A pneumatic tyre may be classified as a car tyre, see paragraph 3.1.1.1, a truck tyre, see paragraph 3.1.1.2 or a motorcycle tyre, see paragraph 3.1.1.3] depending on the service duty conditions required for any specific application and determined by the vehicle manufacturer;

[3.1.1.1 Car tyre means a tyre of a group primarily designed for use on a passenger carrying vehicle having up to eight seats plus the driver. The tyre will be tested in accordance with the relevant requirements in the Annexes to this Regulation and will be identified accordingly;]

[3.1.1.2 Truck tyre means a tyre of a group primarily designed for use on vehicles designed for carrying goods or for carrying passengers and having more than eight seats not including the driver. The tyre will be tested in accordance with the relevant requirements in the Annexes to this Regulation and will be identified accordingly;]

[3.1.1.3 Motorcycle tyre means a tyre of a group primarily designed for use on a two wheel self propelled motor vehicle. The tyre will be tested in accordance with the relevant requirements in the Annexes to this Regulation and will be identified accordingly.]

3.1.2 Brand name, Trade name or Trade mark means an identification applied to the tyre which may be the name or mark of the manufacturer or of a customer for whom the manufacturer is producing tyres for subsequent re-sale (that is, "Own Branding");

3.1.3 Snow tyre means a tyre whose tread pattern, tread compound and structure are primarily designed to achieve in snow conditions, a performance better than that of a normal use tyre with regard to its ability to initiate or maintain vehicle motion;

3.1.4 Special use tyre means a tyre intended for mixed use, both on and off road or for other special service duty;

3.1.5 Uni-directional tyre means a tyre which is designed to operate in a particular direction of rotation relative to normal forward travel of the vehicle;

3.1.6 Asymmetric tyre means a tyre which is not symmetrical about the circumferential centre line of the tyre. The asymmetry may relate to the tread pattern or to the design of the tyre with regard to the tyre to rim fitment configuration;

3.1.7 Temporary use spare tyre means a [car] tyre different from a tyre fitted to a vehicle for normal driving conditions, but intended only for temporary use under restricted driving conditions.

3.1.7.1 T-type temporary use spare tyre means a temporary use spare tyre designed for use at inflation pressures higher than those established for standard and reinforced or extra load tyres;

3.1.8 Run flat tyre means a tyre which is specifically designed to allow limited use under restricted conditions following loss of inflation pressure caused by a penetration of the carcass;

3.1.9 Structure means the technical characteristics of the tyre's carcass. In particular a distinction is made between the following structures;

3.1.9.1 Bias ply tyre (diagonal or cross ply) means a pneumatic tyre structure in which the ply cords that extend to the beads are laid at alternate angles substantially less than 90° to the centreline of the tread;

3.1.9.2 Bias-belted tyre means a pneumatic tyre structure of bias ply (diagonal) type in which the carcass is restrained by a circumferential belt comprised of two or more layers of substantially inextensible cord material;

3.1.9.3 Radial ply tyre means a pneumatic tyre structure in which the ply cords that extend to the beads are laid at substantially 90° to the centreline of the tread, the carcass being stabilised by an essentially inextensible circumferential belt;

3.1.10 Reinforced or Extra Load means a car tyre designed to operate at higher loads and at higher inflation pressures than the corresponding standard tyre;

3.1.11 Tubeless tyre means a tyre specifically designed for fitting to appropriate wheel rims without an inner tube;

3.1.12 Tyre size designation means a combination of letters, numbers and symbols which uniquely identify the geometric size of the tyre;

3.1.13 Service description means the association of the load index or indices with a speed category symbol (for example, 91H or 150/148L);

3.1.13.1 Load index means a code number indicating the normal maximum load capacity of the tyre regardless of any increase in the inflation pressure necessary for the achievement of that load capacity (See Appendix 2 to this section). Truck tyres designed also for fitting in dual formation (twinning) specify two values as shown in the second example in paragraph 3.1.13 – the first value related to single formation fitting and the second value related to dual formation fitting;

3.1.13.2 Speed category means the maximum speed which the tyre can sustain, expressed by means of a letter code speed symbol (See Appendix 1 to this section);

3.1.13.3 Additional Service Description (Unique Point) means a service description applied to [truck] tyres which is an alternative to the normal service description but on which it is not permissible to apply the variation of load capacity with speed associated with the normal service description.

3.1.13.4 Maximum application load capacity means the maximum load the tyre can carry in a specific application, and is dependent on the speed category of the tyre and the speed capability of the vehicle to which the tyre is applied;

3.1.13.5 Variation of load capacity with speed means an authorised variation of the load capacity, as indicated by the load capacity index, based on the actual in-use speed in comparison with the capabilities indicated by the service description;

3.1.14 Tyre to rim fitment configuration means the type of rim to which the tyre is designed to be fitted as identified by a symbol in the case of non-standard rims, for example;

3.1.14.1 "CT" means a tyre with an inverted flange tyre and rim system where the tyre bead is designed to seat on the underside of the rim such that the rim flanges are enclosed within the cavity of the tyre;

3.1.14.2 "TR" means a tyre designed to be fitted to a millimetric size rim incorporating safety features in the bead seating area;

3.1.14.3 "TD" means a tyre with an essentially hemispherical protrusion in the area of the bead seat intended to locate in a formed groove in the millimetric size wheel rim bead seating area;

3.1.14.4 "A" means a tyre designed with a vertical bead seating concept;

[3.1.14.5 "M/C" means a tyre designed to be fitted on rims designed for use on motorcycles with a nominal rim diameter code 13 or larger;]

3.1.15 Rim means that part of the wheel forming the support for the tyre and on which the tyre beads are seated;

3.1.16 Rim Offset means the physical relationship between the circumferential centre line of the wheel and the wheel to hub mounting face ;

[3.1.17 Nominal aspect ratio (profile) means the ratio of the nominal section height to the nominal section width expressed as a percentage;]

[3.1.18 Nominal section height means a distance equal to half the difference between the outer diameter of the tyre and the nominal rim diameter;]

[3.1.19 Nominal Section width means the designed linear distance between the outsides of the sidewalls of an inflated tyre when fitted to the designated rim. It is expressed as a non dimensional number;]

[3.1.20 Outer diameter means the overall diameter of an inflated new tyre;]

[3.1.21 Overall width means the linear distance between the outsides of the sidewalls of an inflated pneumatic tyre, including elevations due to labelling (marking), decorations, and/or protective bands or ribs;]

[3.1.22 Climate suitability indicator means a symbol applied to the tyre to indicate its suitability for use in the climate of a particular market.]

NOTE: This aspect will need discussion to establish the aspects of tyre construction or materials which are climate sensitive and how the suitability of a tyre for a particular market can be indicated to the user/purchaser.

3.2 Definitions related to tyre construction

3.2.1 Bead means the part of the tyre which is of such shape and structure as to fit the wheel rim and hold the tyre on it;

3.2.2 Carcass means that part of the pneumatic tyre structure other than the tread and sidewall rubber, which, when inflated, bears the load;

3.2.3 Cord means the strands or filaments of material forming the plies of the tyre structure;

3.2.4 Inner liner means the layer of rubber forming the inside surface of a tubeless tyre that contains the inflating medium within the tyre;

3.2.5 Ply means a layer of rubber-coated parallel cords;

3.2.6 *Sidewall means that portion of a tyre between the tread and the bead;*

3.2.7 Tread means that part of a tyre that comes into contact with the road;

3.2.8 Tread pattern means the geometric arrangement of blocks, ribs and grooves of the tread ;

3.2.9 Tread groove means the space between two adjacent ribs or blocks in the tread pattern;

3.2.10 Principal grooves means the wide grooves positioned in the central zone of the tyre tread, which, in the case of car tyres, have the treadwear indicators located in the base;

3.2.11 Secondary grooves means the supplementary grooves of the tread pattern which may disappear in the course of the tyre's life;

3.2.12 Regroovable means a truck tyre designed with sufficient undertread material to allow regrooving of the original tread pattern at some stage during the service life of the tyre. Regrooving of car tyres and motorcycle tyres is prohibited;

3.2.13 Treadwear indicators (TWI) means the projections within the principal grooves designed to give a visual indication of the degree of wear of the tread;

3.3 Definitions associated with testing and faults

3.3.1 Bead separation means a breakdown of the bond between components in the bead area of the tyre;

3.3.2 Chunking means the breaking away of pieces of the tread or sidewall;

3.3.3 Cord separation means the parting of cords from adjacent rubber compounds;

3.3.4 Cracking means any parting within the tread, sidewall or inner liner of the tyre extending to cord material;

3.3.5 Inner liner separation means the parting of inner liner from cord material in the carcass;

[3.3.6 Measuring rim means the rim on which the tyre is required to be fitted for physical dimension measurements;]

[3.3.7 Test rim means the rim on which a tyre is required to be fitted for testing, and may be any rim listed as appropriate for use with that tyre;]

3.3.8 Open splice means any parting at any junction of tread, sidewall, or inner liner that extends to cord material;

3.3.8 Ply separation means a parting of adjacent plies;

3.3.9 Sidewall separation means the parting of the rubber compound from the cord material in the sidewall;

3.3.10 Tread separation means the pulling away of the tread from the tyre carcass;

3.3.11 PSI Index means a code identifying the inflation pressure to be used during testing of truck tyres

Appendix 1

SPEED CATEGORY TABLE

Speed symbol	Corresponding speed km/h
F	80
G	90
J	100
K	110
L	120
M	130
N	140
P	150
Q	160
R	170
S	180
T	190
U	200
H	210
V	240
W	270
Y	300

NOTE: Tyres marked "ZR" or "ZB" are designed for use at speeds greater than 300km/h

Appendix 2

LOAD INDEX (LI) TABLE

LI	kg	LI	kg	LI	kg	LI	kg	LI	kg
0	45	40	140	80	450	120	1 400	160	4 500
1	46,2	41	145	81	462	121	1 450	161	4 625
2	47,5	42	150	82	475	122	1 500	162	4 750
3	48,7	43	155	83	487	123	1 550	163	4 875
4	50,0	44	160	84	500	124	1 600	164	5 000
5	51,5	45	165	85	515	125	1 650	165	5 150
6	53,0	46	170	86	530	126	1 700	166	5 300
7	54,5	47	175	87	545	127	1 750	167	5 450
8	56,0	48	180	88	560	128	1 800	168	5 600
9	58,0	49	185	89	580	129	1 850	169	5 800
10	60,0	50	190	90	600	130	1 900	170	6 000
11	61,5	51	195	91	615	131	1 950	171	6 150
12	63,0	52	200	92	630	132	2 000	172	6 300
13	65,0	53	206	93	650	133	2 060	173	6 500
14	67,0	54	212	94	670	134	2 120	174	6 700
15	69,0	55	218	95	690	135	2 180	175	6 900
16	71,0	56	224	96	710	136	2 240	176	7 100
17	73,0	57	230	97	730	137	2 300	177	7 300
18	75,0	58	236	98	750	138	2 360	178	7 500
19	77,5	59	243	99	775	139	2 430	179	7 750
20	80,0	60	250	100	800	140	2 500	180	8 000
21	82,5	61	257	101	825	141	2 575		
22	85,0	62	265	102	850	142	2 650		
23	87,5	63	272	103	875	143	2 725		
24	90,0	64	280	104	900	144	2 800		
25	92,5	65	290	105	925	145	2 900		
26	95,0	66	300	106	950	146	3 000		
27	97,5	67	307	107	975	147	3 075		
28	100	68	315	108	1 000	148	3 150		
29	103	69	325	109	1 030	149	3 250		
30	106	70	335	110	1 060	150	3 350		
31	109	71	345	111	1 090	151	3 450		
32	112	72	355	112	1 120	152	3 550		
33	115	73	365	113	1 150	153	3 650		
34	118	74	375	114	1 180	154	3 750		
35	121	75	387	115	1 215	155	3 875		
36	125	76	400	116	1 250	156	4 000		
37	128	77	412	117	1 285	157	4 125		
38	132	78	425	118	1 320	158	4 250		
39	136	79	437	119	1 360	159	4 375		

Appendix 3

RIM DIAMETER CODE TABLE - "d" SYMBOL

Nominal rim diameter code "d" symbol	Value of "d" symbol in millimetres
8	203
9	229
10	254
11	279
12	305
13	330
14	356
14.5*	368
15	381
16	406
16.5*	419
17	432
17.5*	445
18	457
19	482
19.5*	495
20	508
20.5*	521
21	533
22	559
22.5*	572
23	584
24	610
24.5*	622
25	635
26	660
28	711
30	762

NOTE: Rims marked * are 15° tapered bead seat rims. The remainder are 5° tapered bead seat rims.

Appendix 4

RELATIONSHIP BETWEEN THE PSI INDEX CODE AND INFLATION PRESSURE

PSI Index	Bar	KPa
20	1,4	140
25	1,7	170
30	2,1	210
35	2,4	240
40	2,8	280
45	3,1	310
50	3,4	340
55	3,8	380
60	4,1	410
65	4,5	450
70	4,8	480
75	5,2	520
80	5,5	550
85	5,9	590
90	6,2	620
95	6,6	660
100	6,9	690
105	7,2	720
110	7,6	760
115	7,9	790
120	8,3	830
125	8,6	860
130	9,0	900
135	9,3	930
140	9,7	970
145	10,0	1 000
150	10,3	1 030

Annex 1

MANDATORY TYRE REQUIREMENTS FOR ALL TERRITORIES

1 MANUFACTURER REGISTRATION

1.1 Each tyre manufacturer shall apply to the following address for registration and allocation of a manufacturer identification symbol:

United Nations, Economic Commission for Europe (UN ECE),
Transport Division
Palais des Nations,
CH-1211 GENEVE 10
Switzerland

NOTE Existing identification symbols currently applicable in the USA market will be retained but the existing data and any future allocations will be controlled by UN ECE.

1.2 The manufacturer shall declare the following information in the application and shall inform the UN ECE of any changes to the information :

The name and address of the manufacturer;

The addresses of all manufacturing plants;

Details of Brand Names, Trade Names or Trade Marks to be applied to the tyres manufactured, including the address of the holder.

1.3 The UN ECE shall issue a symbol, which identifies the name of the manufacturer and the manufacturing plant, using a multi-digit alpha-numeric code comprising the numbers 0 to 9 and alphabetical characters but excluding the characters G,I,O,Q,S and Z.

2 MARKING (Labelling)

2.1 Unless otherwise stated, the following information, together with any other markings required by provisions in Annexes to this Regulation, shall be legibly and permanently moulded into or onto the sidewall(s):

- in the case of symmetrical tyres on both sidewalls;

- in the case of asymmetric tyres on at least the outer sidewall as viewed when the tyre is fitted to the vehicle;

- in either case, on at least one sidewall, the required markings shall be in a position on the sidewall where they are least susceptible to being "scrubbed" away during use.

2.1.1 The brand name or the trade name or trade mark, in characters not less than 4mm high;

[2.1.2 The Country of Manufacture in characters not less than 4mm high;]

2.1.3 The tyre designation comprising:

- the tyre group identification (car, truck or motorcycle)

- the tyre size designation;

- an indication of the tyre structure;

- the service description;

- an identification of the tyre to rim fitment configuration when it differs from the standard configuration.

The characters shall be not less than 6mm high and arranged as shown in the examples below:

In the case of a car tyre

P 185/70 R 14 89T - CT where:

P is the tyre group "Car tyre"

185 is the nominal section width;

70 is the nominal aspect ratio;

R indicates the structure is radial ply - alternatively B indicates bias belted and D, or the absence of any marking indicates a diagonal ply tyre;

14 is the rim diameter code, "d" symbol;

89 is the load index;

T is the maximum speed capability associated with the load given by the load index;

CT is the tyre to rim fitment configuration - the absence of any marking would indicate suitability for a standard rim.

In the case of tyre to rim fitment configuration "A" the marking shall follow the example:

P 185-590 R 400A 89T where:

P is the tyre group "Car tyre";

185 is the section width;

590 is the nominal outer diameter of the tyre;

R indicates the structure is radial ply;

400 is the nominal rim diameter;

A is the tyre to rim fitment configuration;

89 is the load index;

T is the maximum speed capability associated with the load given by the load index.

In the case of a truck tyre the marking shall follow the example:

T/B 315/75 R 22.5 154/149 L where:

T/B is the tyre group "Truck tyre";

315 is the nominal section width;

75 is the nominal aspect ratio;

R indicates the structure is radial ply;

22.5 is the rim diameter code, "d" symbol;

154 is the load index in single formation;

149 is the load index in dual (twinned) formation;

L is the maximum speed capability associated with the load given by the load index (indices);

In the case of a truck tyre with a tyre to rim fitment configuration "A" the part of the marking "T/B 315/75 R 22.5" given in the example above shall be replaced by:

T/B 235-700 R 450 A where:

T/B is the tyre group "Truck tyre";

235 is the nominal section width expressed in mm;

700 is the outside diameter expressed in mm;

R indicates the structure is radial ply;

450 is the nominal diameter of the rim expressed in mm;

A is the tyre to rim fitment configuration.

In the case of a motorcycle tyre the marking shall follow the example:

M/C140/80 R 17 69 H where:

M/C is the tyre group "Motorcycle tyre";

140 is the nominal section width;

80 is the nominal aspect ratio;

R indicates the structure is radial ply;

17 is the rim diameter code, "d" symbol;

69 is the load index;

H is the maximum speed capability associated with the load given by the load index.

2.1.3.1 for radial ply tyres suitable for speed in excess of 300 km/h, the letter "R" placed in front of the rim diameter code symbol marking shall be replaced by "ZR" and the tyre shall be marked, in parentheses, with a service description consisting of the speed symbol "Y" and a corresponding load index, for example,
P 235/45 ZR 17(90Y).

Note: the actual maximum tyre load and speed capability shall be stated in the tyre manufacturer's technical literature and made available to the public.

2.1.3.2 in the case of truck tyres the service description may consist of two load indices placed adjacent to each other, for example, 150/148 L. The first index indicates the load capability when used singly and the second index the load capability when the tyre is used in twin or dual formation.

2.1.3.3 An additional service description ("Unique Point"), comprising [a single load index] [one or two load index (indices)] and a speed symbol, enclosed in a circle adjacent to the main service description, may be given.

2.1.4 The word "REINFORCED", or "EXTRA LOAD", if applicable, in characters not less than 4mm high;

2.1.5 The word "TUBELESS", if applicable, in characters not less than 4mm high;

2.1.6 The words "BIAS-BELTED" or "RADIAL", if applicable, in characters not less than 4mm high;

2.1.7 For bias (diagonal) ply and bias-belted tyres, the word "RAYON", in characters not less than 4mm high, if the ply cords that extend to the beads are made of rayon;

2.1.8 If applicable, the word "RUN-FLAT" in characters not less than 4mm high or the symbol *not less than 10mm high.*

2.1.9 The word "REGROOVABLE" in characters not less than 4mm high, or the symbol

not less than 20 mm high, if the tyre is suitable for regrooving. Note that car tyres and motorcycle tyres are not permitted to be regrooved;

2.1.10 The symbol "M+S", "M.S.", "M&S", "M-S", or "M/S", in characters not less than 4mm high if the tyre is a snow tyre;

2.1.11 The symbol "MPT", or "ML", "EHT" or "ET" in characters not less than 4mm high, if the tyre is a truck tyre intended for special use or the symbol "MST" in characters not less than 4mm high if the tyre is a motorcycle tyre designed for special service having a wider tread than equivalent sizes with the same tyre size designation;

2.1.12 An easily recognisable arrow symbol with the letters "DoR" immediately adjacent and in characters not less than 4mm high if the tyre is a "Uni-directional" tyre;

2.1.13 A Certification Mark, in characters not less than 6mm high and at least on one sidewall, comprising:

- the number of this Regulation, including the Series of Amendment Number;

- the manufacturer identification symbol - see 1.3

- a 4-digit date of manufacture code where the first two digits identify the week and the second two digits identify the year of production. This marking may be in characters not less than 4mm high.

The Certification Mark shall be arranged in the form:

XXX00R - AC - 4499 where:

XXX is the number of this Regulation;

00 is the Series of Amendment Number, 00 signifying the Regulation in its original form;

AC is the manufacturer identification symbol;

4499 is the date of manufacture code, indicating, in this example, week 44 of 1999.

2.1.14 In the case of temporary use spare tyres:

2.1.14.1 The wording: "TEMPORARY USE ONLY" in upper case letters not less than 12,7mm high

2.1.14.2 In addition, in the case of "T" type temporary use spare tyres:

The letter "T" immediately preceding the tyre size designation and in the same size lettering as given in the examples in paragraph 2.1.3 of this Annex

And the wording:

"INFLATE TO 420 kPa (60 psi)", in upper case characters not less than 12.7 mm high adjacent to the wording given in paragraph 2.1.14.1;

[2.1.15 In the case of truck tyres a "PSI" code indicating the inflation pressure to be used for the load/speed performance tests.] ***Is this necessary or could information be given in another way?***

3 CONSTRUCTION AND PERFORMANCE REQUIREMENTS

3.1 Car tyres

3.1.1 Dimensions requirements

3.1.1.1 Tyres designed for fitting to vehicles first introduced to the market subsequent to the date of entry into force of this Regulation preferably shall comply with the dimensions set out for metric series tyres below;

3.1.1.1.1 Metric series tyres:

The dimensions for metric series tyres shall comply with the Standards drawn up by the International Organisation for Standardisation (ISO) under the Standard Number ISO 4000-1:1994.
NOTE: The Standards and existing UN ECE Regulations will need to be cross checked as the tolerancing appears to be treated differently. For example, ISO refers to maximum dimensions as "Growth in Service" whereas ECE Regulation 30 seems to allow those dimensions for a new tyre. Also the way of quoting allowance for rubbing or kerbing ribs is different.

3.1.1.1.2 Other tyres:

For tyres not within the scope of the ISO Standards given in 3.1.1.1.1 of this section, the dimensions shall comply with those given in standards publications of the following organisations and which were current at the date of manufacture of the tyre or at any later date:

The Tire and Rim Association, Inc.
The European Tyre and Rim Technical Organisation
Japan Automobile Tire Manufacturers Association
The Tyre and Rim Association of Australia
ALAPA (Brazil)
South Africa Bureau of Standards

3.1.1.2 The following requirements apply to metric series tyres and refer to the ISO Standards given in 3.1.1.1.1. The test procedure is given in Appendix 1 to this Annex.

3.1.1.2.1 *The overall width of the tyre shall not exceed the value given in the relevant Standard by* more than the following factor:

3.1.1.2.1.1 For all bias-ply and bias-belted tyres: 1,07;

3.1.1.2.1.2 *For all radial tyres:* 1,04;

3.1.1.2.1.3 For all T-type temporary use spare tyres: use the applicable value in 3.1.1.2.1.1 or 3.1.1.2.1.2 or 10mm whichever is the larger;

3.1.1.2.1.4 *If the tyre has special protective ribs or bands, the figure as increased by the above* tolerances may be exceeded by 8 mm.

3.1.1.2.1.5 For tyres identified by the tyre to rim fitment configuration symbol "A", the overall width of the tyre in the area adjacent to the rim shall, when fitted to a rim of the appropriate designed width, not exceed the nominal rim width by more than 20mm.

3.1.1.2.2 The outer diameter of the tyre, D_o in mm, shall be within the limits:

In the case of normal use tyres: $D_r + (2H \times 0{,}97) \leq D_o \leq D_r + (2H \times f_{max})$

In the case of snow tyres: $D_r + (2H \times 0{,}97) \leq D_o \leq D_r + 1{,}01(2H \times f_{max})$
where:

- D_r is the nominal rim diameter in mm

- H is the nominal section height in mm = $S_n \times A_n/100$, where S_n is the nominal section width and A_n is the nominal aspect ratio.

- f_{max} = 1,04 in the case of radial ply tyres and
  1,08 in the case of bias belted and bias ply tyres

NOTE: This section requires checking as it is not clear between this information and that given in ISO 4000 whether the maximum outer diameter calculated is new production limit or the in-service grown value. ISO 4000 suggests that is the in-service growth diameter, which is unsuitable for checking new tyres.

3.1.1.2.3 For tyres other than metric series tyres, all dimensions shall be controlled to the figures and tolerances given in standards publications of the organisations given in 3.1.1.1.2.

3.1.2 Strength Test requirements

The following requirements shall apply to Bias ply (diagonal) and bias-belted tyres only, when tested in accordance with the test procedure given in Appendix 2 to this Annex.

3.1.2.1 Each tyre shall meet the requirements for minimum breaking energy specified in one of the tables below.

3.1.2.1.1 For diagonal (bias-ply) and bias-belted tyres other than T-type temporary spare tyres:

Minimum Breaking Strength - Joules

Nominal Section Width and Body-Ply Cord Material	Diagonal (bias-ply) tyres			Bias-belted tyres	
	Ply rating			Standard	Reinforced Extra Load
	4	6	8		
Below 160 mm					
Rayon	113	212	282	113	282
Other than rayon	220	330	441	220	441
160 mm & above					
Rayon	186	280	373	186	373
Other than rayon	294	441	588	294	588

3.1.2.1.2 For diagonal (bias-ply) and bias-belted T-type temporary use spare tyres:

Minimum Breaking Strength -- Joules

Body-Ply Cord Material	T-type temporary use spare tyre	
	Maximum Load	
	Below 400 kg	400 kg & above
Rayon	113	186
Other than rayon	220	294

3.1.3 Tubeless Tyre Bead Unseating Resistance Test requirements

The following requirements apply to all Diagonal (bias-ply) tyres and Bias-belted tyres when tested in accordance with the procedure given in Appendix 3 to this Annex. [Up to 31 December 2004 at the latest, the requirements shall also apply to radial ply tyres where it is physically possible to carry out the tests using the blocks referred to in paragraph 2.2 of Appendix 3 to this Annex.]

NOTE: The reason for placing this item in square brackets is that it is subject to further discussion and agreement.

3.1.3.1 Each tubeless tyre shall meet the requirements for minimum force, in Newtons, for bead unseating resistance, specified in one of the tables below:

3.1.3.1.1 For tubeless diagonal (bias-ply), bias-belted, radial ply tyres having a nominal aspect ratio of [55] or above and tyres other than T-type temporary use spare tyres, the applied force required to unseat the tyre bead at the point of contact, in relation to the nominal section width of the tyre, shall not be less than:

Nominal section width, S mm	Force N
S < 160	6 670
160 ≤ S < 205	8 890
S ≥ 205	11 120

Nominal section width, S code	Force N
S < 6.00	6 670
6.00 ≤ S < 8.00	8 890
S ≥ 8.00	11 120

3.1.3.1.2 For tubeless diagonal (bias-ply) and bias-belted T-type temporary use spare tyres, the applied force required to unseat the tyre bead at the point of contact, in relation to the tyre load index, shall not be less than:

Load Index LI	Force N
LI < 76	6 670
76 ≤ LI < 93	8 890
LI ≥ 93	11 120

3.1.4 Low Speed Endurance Test

The following requirements shall be met by Bias ply (diagonal) and bias-belted tyres; [radial tyres speed rated Q or below, only]; and all T-type temporary use spare tyres when tested in accordance with the procedure given in Appendix 4 this Annex.

3.1.4.1 There shall be no visible evidence of tread, sidewall, ply, cord, inner liner, belt or bead separation, chunking, open splices, cracking or broken cords.

3.1.4.2 The tyre pressure, measured no more than 15 minutes after the test, shall not be less than the initial pressure specified in paragraph 1.2 of Appendix 4.

3.1.5 High Speed Endurance Test

The following requirements shall be met when tested in accordance with the procedure given in Appendix 5 to this Annex.

3.1.5.1 There shall be no visible evidence of tread, sidewall, ply, cord, inner liner, belt or bead separation, chunking, open splices, cracking or broken cords. For tyres tested at a speed of 300 km/h or above, superficial blistering in the tyre tread due to localised heat build-up in the test drum is acceptable.

3.1.5.2 The tyre pressure, measured no more than 15 minutes after the test, shall not be less than the initial pressure specified in paragraph 1.1 of Appendix 5., above.

3.1.6 Treadwear Indicators

3.1.6.1 Except as noted below, each tyre shall have at least six traverse rows of treadwear indicators, approximately equally spaced around the circumference of the tyre and situated in the principal grooves of the tread.

3.1.6.2 For tyres designed for mounting on rims of nominal rim diameter code 12 or less, not less than four transverse rows of treadwear indicators is acceptable.

3.1.6.3 The treadwear indicators must provide a means to visually determine when the principal tread grooves are no longer more than 1.6 mm, + 0.6, - 0.0 mm deep.

Appendix 1

TEST PROCEDURE FOR MEASURING TYRE DIMENSIONS

1 Preparation of tyre

1.1 Mount the tyre on the measuring rim specified by the tyre manufacturer or in one of the publications listed in 3.1.1.1.2.

1.1.1 In the case of a car tyre, inflate it to the pressure specified in the table below:

Inflation Pressure -- kPa

Radial and Bias-belted		Diagonal (bias-ply)			T-type temporary use spare
Standard	Reinforced or Extra Load	Ply rating			
		4	6	8	
180	220	170	190	220	420

1.1.2 In the case of a truck tyre, inflate it to the pressure index given by the manufacturer.

1.2 Condition the assembly at ambient test room temperature for not less than 24 hours.

1.3 Readjust the tyre pressure to that specified in 1.1.1 or 1.1.2.

2 Test Procedure

2.1 Measure the overall width by calliper at six points approximately equally spaced around the circumference of the tyre, including the additional thickness of any special protective ribs or bands. The [maximum] of the measurements so obtained is taken as the overall width.

2.2 Determine the outer diameter by measuring the maximum circumference of the tyre and dividing the figure so obtained by π (3,141 6).

Appendix 2

STRENGTH TEST PROCEDURE – CAR TYRES

1 Mount the tyre on a test rim and inflate it to the pressure specified in the table below:

Inflation Pressure -- kPa

"T" type temporary use spare tyres	Diagonal (bias ply) tyres			Bias Belted tyres	
	Ply rating			Standard	Reinforced or Extra Load
	4	6	8		
360	170	190	200	180	220

1.1 Condition the wheel and tyre assembly for at least three hours at the temperature of the test room;

1.2 Adjust the tyre pressure to that specified in the table in paragraph 1;

2 Position a cylindrical steel plunger having a hemispherical end and a diameter of 19 mm ± 0.125 mm as close to the circumferential centreline of the tread breadth as possible, avoiding penetration into the principal tread grooves;

3 The breaking energy, W, in Joules, shall be calculated from:

$$W = (F \times P)/2\,000$$

where

W = Energy in Joules
F = Force in Newtons applied to the plunger
P = Penetration of the plunger in mm

4 Force the plunger radially inwards at a rate of 50mm/min, ± 2,5mm/min and continuously compute the breaking energy using simultaneous readings of the depth of penetration and the corresponding force in N applied to the plunger. Continue the test until either the minimum value of breaking energy given in paragraph 4.1.2.1.2 of this Annex, is achieved or the carcass fails;

5 In the case where there is not any failure, the test shall be repeated at up to a maximum total of five positions, approximately equi-spaced around the circumference of the tyre, and the pressure before each test shall be adjusted to that given in paragraph1 above;

6 If there is not any carcass failure before the plunger is stopped by the underside of the tread area reaching the wheel rim, the tyre shall be considered as having passed the test;

7 In the case where the test machine cannot continuously compute the breaking energy, it shall be permitted for the test to be carried out by recording the instantaneous values of

penetration and force at the point at which the carcass fails and calculating the breaking energy from these values. The conditions given in paragraphs 5 and 6 shall still apply.

8 In the case of Tubeless tyres, equipment may be provided to ensure the retention of the inflation pressure throughout the test provided that such equipment does not adversely affect the test.

Appendix 3

TUBELESS TYRE BEAD UNSEATING RESISTANCE TEST – CAR TYRES

1 Preparation of tyre

1.1 Wash the tyre and dry it at the beads. Mount it without lubricant or adhesive on a clean, painted test rim. The rim contour shall be one of those specified for the fitment of the test tyre.

1.2 Inflate the tyre to the pressure specified in the table in paragraph 1 of Appendix 2.

2 Test Procedure

2.1 *Mount the assembly on a fixture as shown in Figure 1, below.*

2.2 Position the bead unseating block (one of two types shown in Figure 2, below) against the tyre sidewall at a horizontal distance P as shown in Figure 1 and Table 1, below. However, when testing a T-type temporary use spare tyre, use the Type A block shown in Figure 2, below.

2.3 Apply a force through the block to the tyre outer sidewall at a rate of 50 mm/min ± 2.5 mm/min.

2.4 *Increase the force until the bead unseats or until the prescribed value is reached.*

2.5 Repeat the test at least four times at places approximately equally spaced around the tyre circumference.

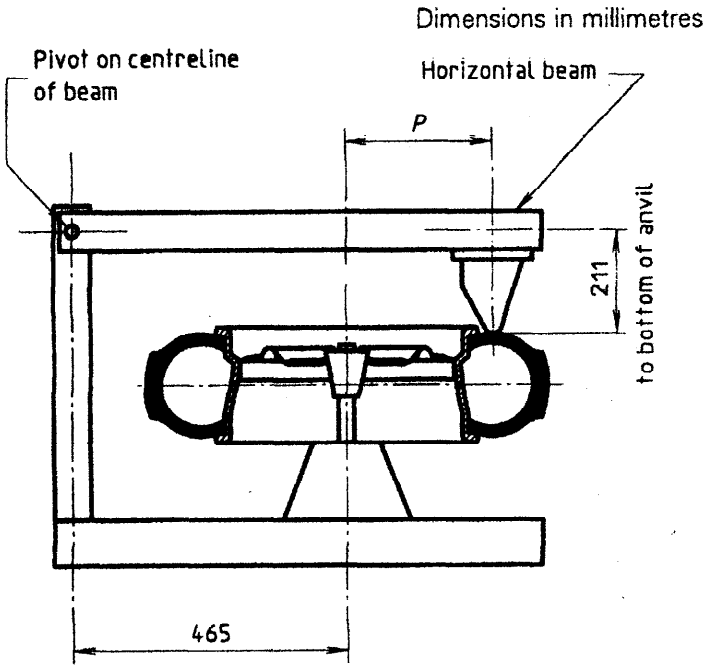

Figure 1 -- Bead unseating fixture

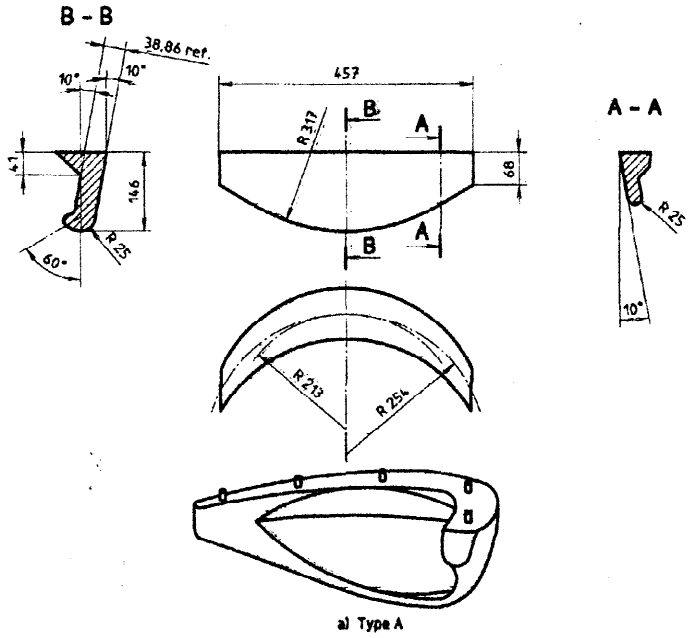

NOTE Part of illustration missing - will be added later

Material Cast Aluminium 355
T - 6 Condition
Finish - 1,3µm (50 Micro Inch)

<u>Figure 2</u> -- Diagrams of bead unseating blocks

Table 1 -- Distance P from bead unseating block

Dimension P in millimetres

Nominal rim diameter code	T-type temporary use spare tyres	All other tyres
10		216
12		241
13		254
14	226	267
15	239	279
16	251	292
17	269	305
18	290	318
19	305	330

Appendix 4

LOW SPEED ENDURANCE TEST PROCEDURE – CAR TYRES

1. Preparation of Tyre

1.2 Mount the tyre on a test rim and inflate it to the pressure specified in the table in paragraph 1 of Appendix 2

1.3 Condition the assembly at an ambient temperature of not less than 35° C for at least three hours.

1.4 Readjust the pressure to the value specified in paragraph 1.2 immediately before testing.

2 Test Procedure

2.1 Mount the assembly on a test axle and press it against the outer face of a smooth wheel having a diameter of 1.70 m ± 1%.

2.2 During the test the ambient temperature, at a distance of not less than 150 mm and not more than 1 m from the tyre, shall be at least 35° C.

2.3 Conduct the test, without interruptions, at not less than 80 km/h test speed with loads and test periods not less than those shown in the appropriate table below:

2.3.1 Bias-ply (diagonal), bias-belted, and all T-type temporary use spare tyres only:

Test period	Duration	Load as a percentage of tyre maximum load rating
1	4 h	85%
2	6 h	90%
3	24 h	100%

2.3.2 Radial tyres

Test period	Duration	Load as a percentage of tyre maximum load rating
1	4 h	100%
2	6 h	110%
3	24 h	115%

2.4 Throughout the test the inflation pressure shall not be corrected and the test loads shall be kept constant at the value corresponding to each test period.

2.5 No more than 15 minutes after running the tyre the required time, measure its inflation pressure. Allow the tyre to cool for one hour. Then deflate the tyre, remove it from the test rim, and inspect it.

3 Equivalent test methods

If a method other than that described in paragraph 2 above is used, its equivalence must be demonstrated.

Appendix 5

HIGH SPEED ENDURANCE TEST – CAR TYRES

1 Preparation of tyre

1.1 Mount the tyre on a test rim and inflate it to the appropriate pressure specified in the table below ; if a T-type temporary use spare tyre has no speed symbol, test as if speec category L):

Inflation Pressure -- kPa

Speed category	Diagonal (bias-ply) tyres			Radial & bias-belted tyres 1/	
	Ply rating			Standard	Reinforced
	4	6	8		
L, M, N	230	270	300	240	280
P, Q, R, S	260	300	330	260	300
T, U, H	280	320	350	280	320
V	300	340	370	300	340
W, Y	-	-	-	320	360

1/For CT tyres, increase test inflation 50 kPa.
Note: For T-type temporary use spare tyres, the tyre shall be inflated to 420 kPa.

1.2 Condition the assembly at test room temperature for at least three (3) hours.

1.3 Before or after mounting the assembly on a test axle, readjust the tyre pressure to that specified in paragraph 1.1 above.

2 Test Procedure

2.1 Press the assembly against the outer face of the test drum.

2.2 Depending upon the speed symbol applicable to the tyre apply to the test axle, a load equal to 80% of the tyre's maximum load capacity or maximum application load capacity, (see paragraphs 3.1.13.1.2 and 3.1.13.1.3 of this Annex and Appendix 1 of Annex 4).

2.3 Throughout the test the inflation pressure shall not be corrected and the test load shall be kept constant.

2.4 During the test the ambient temperature, at a distance of not less than 150 mm and not more than 1 m from the tyre, shall be maintained at 25° C ± 5° C, or at a higher temperature if the tyre manufacturer agrees.

2.5 Carry the test through without interruptions as follows, in relation to the tyre's speed symbol.

2.6 The initial test speed (ITS) is equal to the tyre's speed category,

-less 40 km/h on a 1.70 m ± 1% drum, or
-less 30 km/h on a 2.0 m ± 1% drum.

2.6.1 For tyres of speed symbol L to W, inclusive:

2.6.1.1 Accelerate the equipment at a constant rate such that the initial test speed (ITS) is reached at the end of 10 minutes from start-up.
-then, at the ITS for 10 minutes.
-then, at the ITS plus 10 km/h for 10 minutes.
-then, at the ITS plus 20 km/h for 10 minutes.
-then, at the ITS plus 30 km/h for 20 minutes.

2.6.2 For tyres of speed symbol Y:

2.6.2.1 Accelerate the equipment at a constant rate such that the initial test speed (ITS) is reached at the end of 10 minutes from start-up.
-then, at the ITS for 20 minutes.
-then, at the ITS plus 10 km/h for 10 minutes.
-then, at the ITS plus 20 km/h for 10 minutes.
-then, at the ITS plus 30 km/h for 10 minutes.

2.6.3 For tyres with "ZR" in the size designation intended for use at speeds greater than 300km/h;

2.6.3.1 Test the tyre at the load and inflation for a Y rated tyre according to the procedures specified above in paragraph 2.6.2.

2.6.3.2 Test a further sample of the same type according to:

2.6.3.2.1 Inflate the tyre to 320 kPa. Apply a load to the test axle that is equal to 80 per cent of the load specified by the tyre manufacturer. Accelerate the equipment at a constant rate such that the rated speed of the tyre is reached at the end of 10 minutes from the start-up. Then test at the rated speed for 5 minutes.

Note: 2.6.3.1 and 2.6.3.2 may be carried out on the same tyre sample if the tyre manufacturer agrees.

2.6.3.3 If the tyre has no service description and has a maximum speed rating that is > 240 km/h and < 300 km/h, inflate the tyre to 300 kPa, load the test axle to 80 per cent of the load specified by the tyre manufacturer, and test the tyre according to the procedure specified in paragraph 2.6.1, with the initial test speed (ITS) equal to the tyre's maximum speed rating as specified by the tyre's manufacturer minus the speed specified in paragraph 2.6, depending on the test drum size.

2.6.4 No more than 15 minutes after running the tyre for the required time, measure its inflation pressure. Allow the tyre to cool for one hour. Then deflate the tyre, remove it from the test rim, and inspect it.

3 Equivalent test method

If a method other than that described in paragraph 2 above is used, its equivalence must be demonstrated.

Annex 2A

OPTIONAL HARMONISED REQUIREMENTS FOR WET GRIP (TRACTION)

NOTE: THE DETAILS GIVEN IN THIS ANNEX WILL BE REPLACED BY THE REQUIREMENTS AND PROCEDURES DEVELOPED BY THE GROUP WHICH IS CONSIDERING TYRE WET GRIP. THESE ARE LIKELY TO BE BASED ON A COMPARATIVE PROCEDURE RATHER THAN A MEASUREMENT OF ABSOLUTE VALUES

1 When tested in accordance with the procedure given in Appendix 1 to this Annex, the following values of brake force coefficient shall be obtained:

1.1 Peak

[0,95] at 50km/h and

[0,90] at the maximum speed indicated by the speed symbol of the tyre or [140]km/h whichever is the lesser.

1.2 Locked wheel

[0,6] at 50km/h and

[0,5] at the maximum speed indicated by the speed symbol of the tyre or [140]km/h whichever is the lesser.

1.3 In addition to the marking requirements given in paragraph 2 of Annex 1 of this Regulation, any tyre which conforms to this Annex shall bear the letter A immediately following the Regulation number given in the Certification Mark. The Certification Mark shall be arranged in the form:

XXX00RA - AB02 - 4499 where

XXX –R is the number of this Regulation;

00 is the series of Amendment Number, 00 signifying the Regulation in its original form;

A signifies conformity with the Wet Grip requirements of this Annex, Annex 2A;

AB03 is the manufacturer identification symbol;

4499 is the date of manufacture, indicating, in this example, week 44 of 1999.

Note that tyres which conform to multiple optional harmonised Annexes will have additional letters following the Regulation Number, for example, a tyre conforming to Annex 2A and 2B may be marked XXX00RAB – AB02 – 4499.

Appendix 1

TEST PROCEDURE FOR ESTABLISHING WET GRIP PERFORMANCE

1 General

Tyre wet grip performance shall be established on the basis of determining both the peak and locked wheel brake force coefficient, (BFC), achieved in a straight line braking test. The brake force coefficient is the non-dimensional ratio of the brake force generated at the tyre circumference to the load borne by that tyre.

2 Test Vehicle

Tests may be carried out using:

2.1 Two sample tyres fitted to the front axle of a test vehicle which has been modified to allow graduated braking of the front wheels only with braking force sufficient to obtain the locked wheel condition.

If the vehicle is not equipped with dynamic axle load measuring equipment then data must be available in the form of height of centre of gravity of the loaded vehicle and the wheelbase of the vehicle in order to calculate the value of load transfer at the deceleration obtained.

The vehicle shall be fitted with a longitudinally orientated accelerometer capable of measuring deceleration up to at least 1,2g at an accuracy of ±0,01g which should be coupled with a data logger to record deceleration versus time. It shall be possible to correct for vehicle pitch if this is significant.

The vehicle shall also be fitted with a speed measuring and recording device with an accuracy of 2km/h.

It shall be possible to load the vehicle such that the load borne by each tyre is within ± 2% of either the maximum load capacity of the tyre as given in 3.1.13.1.2 of this Regulation or the maximum application load capacity of the tyre as given in paragraph 3.1.13.1.3 of this Regulation depending upon the speed symbol applicable to the tyre.

2.2 As an alternative the sample tyre may be tested using a tyre test vehicle or trailer which can apply load to a single sample tyre and wheel mounted on an instrumented axle such that brake force coefficient can be measured or obtained by analysis. The accuracy of speed measurement and tyre loading shall be as stated in paragraph 1.1 and, if brake force coefficient is recorded directly, the result shall be accurate to within ± 0,01.

2.3 The vehicle or trailer shall not have any brake faults likely to adversely affect the test results.

3 Test surface

3.1 Tests shall be carried out on two typical types of road surface;

3.1.1 Rough macro structure with harsh micro texture - typically hot rolled asphalt

3.1.2 Smooth macro structure with harsh micro texture - typically fine textured asphalt

Note: Until such time as there are defined standards for surfaces the approval authority shall satisfy itself that the surfaces used for these tests are representative of those in common use for roads and highways and are capable of achieving the necessary friction values.

3.2 The test surface shall be level with a gradient not exceeding 2% in any direction and shall be free from any loose material or deposits likely to affect the results of the tests.

3.3 The test surface shall be wetted to a state of "just wet" with depth of water not exceeding 0,5mm.

The surface may be wetted from the track side or by a wetting system incorporated into the test vehicle or test trailer.

3.4 There shall be a control system in operation to ensure that the frictional properties of the test surface are consistent.

4 Tyre preparation

4.1 The sample tyre(s) shall be free from all moulding sprues and shall be run in for approximately 200km before test.

4.2 The tyre shall be inflated to the pressure recommended by the tyre manufacturer for the load prescribed in paragraph 2.1.

4.3 The tyre shall be tested at a static load equivalent to 80% ± 2% of that given by the load index of the tyre.

5 Ambient conditions

5.1 The ambient temperature shall be between 278°K and 308°K.

5.2 The wind speed in any direction shall not exceed $3 m.s^{-1}$.

6 Procedure

6.1 The sample tyre(s) shall be run under similar conditions to those existing on the test site for a sufficient time to have reached normal running temperature. The run shall include braking of the wheel and tyre(s) in order to stabilise the brake performance, but without intentionally locking the wheels.

6.2 Tyre pressure shall be recorded before and after test and the pressure after test shall not be less than that recorded before test.

6.3 Test runs

6.3.1 *A test run in one direction along the test surface shall be followed by a run in the* opposite direction.

6.3.2 There shall be ten test runs at each of the speeds given in paragraph 6.3.3.

6.3.3 *For car tyres the initial test speed shall be 50km/h which shall be followed by tests at* 90km/h and [140]km/h or the maximum speed given by the speed symbol of the tyre whichever is the lesser. If the maximum test speed is less than 110km/h then the intermediate speed may be reduced to 80km/h.

For truck tyres with a load index ≤ 121 AND a speed symbol ≥ N, the initial test speed shall be 50km/h which shall be followed by tests at 90km/h and [140]km/h. If the maximum test speed is less than 90km/h then the intermediate test speed may be reduced to 60km/h.

For light truck tyres with a load index ≤ 121 AND a speed symbol ≤ M plus truck tyres with a load index ≥ 122, the initial test speed shall be 40km/h which shall be followed by tests at 70km/h and [100]km/h or the maximum speed indicated by the speed symbol of the tyre whichever is the lesser. If the maximum test speed is less than 90km/h then the intermediate test speed may be reduced to 60km/h.

The test speeds shall be within ± 10% of those quoted above.

6.3.4 The tests shall be carried out without any significant delay between each run or series of runs.

6.3.5 The test vehicle, or trailer, shall be driven so as to approach the test surface area at a speed in excess of the test speed. The drive shall be disconnected as appropriate and when the test speed is reached the brakes shall be applied quickly and smoothly up to the point of wheel lock. The wheel lock condition shall be maintained for approximately 1s to 1,5s before releasing the brakes.

6.3.6 Data sufficient to measure or calculate the brake force coefficient shall be collected on each test run. The calculation shall take account of rolling resistance of the test vehicle or trailer and any dynamic weight transfer.

6.4 The brake force coefficient shall be the average of the obtained or calculated values for the ten runs at each test speed.

Annex 3

REQUIREMENTS FOR UN ECE TYPE APPROVAL SYSTEM

1 Introduction

The system of Type Approval was set up as part of the "Agreement concerning the adoption of uniform technical prescriptions for wheeled vehicles, equipment and parts which can be fitted and/or be used on wheeled vehicles and the conditions for reciprocal recognition of approvals granted on the basis of these prescriptions" done at Geneva on 20 March 1958 and generally referred to as "the 1958 Agreement".

Under the terms of the type approval system the manufacturer submits a product to a Type Approval Authority to assess that the product conforms to the relevant Regulation(s) before the product is released on to the market. A Type Approval Authority is officially designated by the Administrative Authorities of any country which is a signatory or Contracting Party to the UN ECE 1958 Agreement.

A country which is a Contracting Party to the 1958 Agreement may elect to become a signatory to any particular Regulation, following which the Type Approval Authority of that country may carry out approval testing to that Regulation. On becoming a signatory to a particular Regulation a Contracting Party must allow free entry to the market for any products type approved to the Regulation by other Contracting Parties which are signatory to the Regulation and may require conformity of products to the Regulation in its national legislation.

To ensure that testing requirements are not excessive, products of similar design are classed as "types" and the definition of "type" is given in each Regulation. The characteristics of the product, or range of similar products, which appear in the definition of "type" are such that any changes made to these characteristics by the manufacturer shall be notified to the Type Approval Authority which shall assess whether the changes made are sufficiently significant as to require a new approval or whether the original approval can be extended.

Following approval, the manufacturer is granted an approval number and is required to apply the approval mark, the "E" mark, and the approval number to every example of the product made. The Type Approval Authority is also committed to carrying out Conformity of Production checks during the production lifetime of the product, to ensure that it continues to conform to the original type which was approved.

Failure of a product to conform to the original type approved may result in the approval being withdrawn.

2 A Contracting Party to the 1958 Agreement shall inform the United Nations Transport Section Secretariat of the name and address of its Type Approval Authority and of any laboratories or technical services authorised to carry out tests on its behalf.

The laboratories or test facilities of the manufacturer may be used by a Type Approval Authority but the manufacturer may not be a designated technical service and any tests carried out using the manufacturer's facilities shall be witnessed by the Authority.

3 Application for approval for a type of pneumatic tyre:

The application for approval of a pneumatic tyre shall be submitted to the notified Type Approval Authority of a Contracting Party to the 1958 Agreement by the tyre manufacturer or by his duly accredited representative. It shall contain the information required in the relevant Information Document detailed in Appendix 2, 2A, 2B and so on, and the Type Approval Authority shall request a number of samples sufficient to carry out the approval.

4 The definition of "type" in connection with the approval of a tyre to a particular Annex, means tyres which do not differ in such essential characteristics as declared by the manufacturer in the relevant Information Document.

5 The procedures for initial assessment for type approval shall follow, unless stated otherwise in this Annex, those given in Appendix 2 to Revision 2 of the 1958 Agreement, UN ECE Document E/ECE/TRANS/505 Rev.2.

6 If the type of pneumatic tyre submitted for approval to the Mandatory Requirements given in Annex 1 of this Regulation. or to any of the Optional Requirements contained in Annex 2A, 2B and so on, of this Regulation, meets those requirements then approval of that type to the relevant Annex shall be granted. It shall not be possible for a tyre to be placed on the market which is approved to any Annex 2 series (2A, 2B and so on) requirement unless it is also approved to Annex 1.

7 Where a manufacturer submits application for type approval of a range of tyres, it may not be necessary to carry out the performance tests on every type of tyre in the range. Worst case selection may be made at the discretion of the Type Approval Authority.

8 An approval number shall be assigned to each type approved and in respect of each relevant Annex. Approval may be granted to different Annexes by different Contracting Parties but the same Contracting Party shall not assign the same number to another type of pneumatic tyre or to an approval to another Annex.

9 Notice of approval or of refusal of approval shall be communicated to the Contracting Parties to the Agreement which apply this Regulation, by means of a Communication Form outlined in Appendix 1 of this Annex.

10 The Contracting Party which has granted approval to Annex 1 shall be considered as the reference authority for that tyre type. Approval numbers assigned by a Contracting Party in respect of approvals to Annex 2A, 2B and so on, need not be applied to the tyre but on receipt of notification of such approvals (see 9 above) the reference authority shall authorise the manufacturer to apply the appropriate suffix to the Annex 1 approval mark as shown in 11 below.

11 Circumferentially adjacent to the Certification Mark referred to in 3.1.12 of Annex 1, there shall be moulded into or on to at least one sidewall, a permanent and legible international approval mark comprising:

- a circle not less than 12mm diameter, surrounding the letter "E" not less than 6mm high, followed by the distinguishing number of the country which has granted approval in letters not less than 4mm high*. This shall be followed outside the circle by

- the approval number referred to in 8 and 11 above, in letters not less than 6mm high and in the form:

XXX00R 2439 where

XXX -- is the number of this Regulation;

00 is the Series of Amendment Number, 00 signifying the Regulation in its original form, and

2439 is the approval number relative to Annex 1 of this Regulation, for the type of tyre.

In the case where approval has been granted to an Annex 2 series, 2A, 2B and so on, the reference authority which has responsibility for the Annex 1 approval shall authorise the manufacturer to add the Annex suffix to the Regulation Number in the form:

XXX00RA or

XXX00RB or

XXX00RAB and so on.

* The distinguishing number shall be:

1 for Germany, 2 for France, 3 for Italy, 4 for the Netherlands, 5 for Sweden, 6 for Belgium, 7 for Hungary, 8 for the Czech Republic, 9 for Spain, 10 for Yugoslavia, 11 for the United Kingdom, 12 for Austria, 13 for Luxembourg, 14 for Switzerland, 15 (vacant), 16 for Norway, 17 for Finland, 18 for Denmark, 19 for Romania, 20 for Poland, 21 for Portugal, 22 for the Russian Federation, 23 for Greece, 24 for Ireland, 25 for Croatia, 26 for Slovenia, 27 for Slovakia, 28 for Belarus, 29 for Estonia, 30 (vacant) 31 Bosnia and Herzegovina, 32 for Latvia, 33 to 36 (vacant), 37 for Turkey, 38 and 39 (vacant), 40 for the former Yugoslav Republic of Macedonia, 41 (vacant), 42 for the European Community [each Member State granting approval uses its own number as in this list], 43 for Japan.

Further numbers shall be assigned to other countries in the chronological order in which they ratify the 1958 Agreement, or in which they accede to the 1958 Agreement, and the numbers thus assigned shall be communicated by the Secretary- General of the United Nations to the Contracting Parties to the 1958 Agreement.

12 Any change to the information provided on the application form for approval, Appendix 2, 2A , 2B and so on, shall be notified to the Type Approval Authority which granted the approval. *The Type Approval Authority may then:*

12.1 Consider that the changes made are unlikely to have any significant adverse effect and that the tyre still meets the requirements, or

12.2 *Require further tests of the modified tyre.*

13 Confirmation of extension of approval or of refusal of extension, specifying the changes to the tyre and an assigned extension series number, if applicable, shall be communicated to the other Contracting Parties applying this Regulation, by means of the *form in*
Appendix 1.

14 The Conformity of Production procedures shall follow those given in Appendix 2 to Revision 2 of the 1958 Agreement, UN ECE Document E/ECE/TRANS/505 Rev.2 and *the normal frequency of inspections shall be one per year.*

15 Approval granted to either Annex 1 or Annex 2 series of this Regulation may be withdrawn if the tyre is found not to be in conformity with any of the requirements. Withdrawal of approval shall be communicated to the other Contracting Parties applying *this Regulation by means of the form in Appendix 1.*

16 The manufacturer shall inform the Type Approval Authority if production of an approved tyre is ended and the Type Approval Authority shall, in turn, inform the other Contracting Parties applying this Regulation by means of the form in Appendix 1.

Appendix 1

COMMUNICATION

issued by :
Name of administration :
.....
.....

E... [1] .....

XXXR

concerning [2]
- Approval Granted
- Approval Extended
- Approval Refused
- Approval Withdrawn
- Production Definitely Discontinued

of a tyre pursuant to Regulation XXX or an Annex thereto :

Approval No : ..... Extension No.....

0 *Annex(es) covered by this approval* .....

1. Manufacturer's name, Brand Name, Trade Name or Trade Mark:

.....

2. Name and address of production unit: .....
3. If applicable, name and address of manufacturer's representative .....
4. Details of tyres approved(confirmation of the information given in the information document accompanying the application for approval):.....
5. Technical service(s) approved for purposes of approval or verification of conformity:

.....

6. Date of report issued by that service .....
7. Number of report issued by that service .....
8. Reason(s) of extension (if applicable) .....
9. Any remarks .....
10. Place .....
11. Date .....
12. Signature .....

13. Annexed to this communication is a list of documents in the approval file deposited at the Approval Authority which has considered this approval and which can be obtained upon request.

---

1 Distinguishing number of the country which has granted/extended/refused/withdrawn approva (see approval provisions in the Regulation).

2 Delete that which does not apply

Appendix 2

INFORMATION DOCUMENT IN RESPECT OF APPLICATION FOR APPROVAL TO ANNEX 1 AND/OR ANNEX 2A

NOTE: The following information will be used by the Type Approval Authority to determine "worst case" selection and the necessity for further testing to allow extension of the approval.

1 General:

1.1 The name and address of the manufacturer and any brand name, trade name or trade mark to be applied to the tyre;

1.2 The name and address of the accredited representative, if applicable;

1.3 The address of the plants in which the tyre is to be produced;

2 Details of the tyre(s) concerned:

2.1 The tyre size designation(s);

2.2 Whether car tyre, truck tyre or motorcycle tyre;

2.3 The category of use (normal, snow, special or temporary use);

2.4 The service description(s) including all load indices and "Unique Point" if applicable;

2.5 Whether the tyre(s) is(are) designed to be used without an inner tube (TUBELESS);

2.6 Whether the tyre(s) is (are) REINFORCED or EXTRA LOAD or an S type or T type temporary use spare tyre;

2.7 The ply rating number(s) for diagonal ply (bias ply) tyres and the ply material if Rayon;

2.8 The overall section width(s) and overall diameter(s);

2.9 The rims on which the tyre(s) shall be mounted;

2.10 Details of the "theoretical rim" and "measuring rim" to enable the type approval authority to check the dimensions of the finished tyre;

2.11 In the case of a truck tyre, the pressure index for test purposes;

2.12 In the case of a car tyre intended for use at speeds greater than 300km/h, the maximum speed and the applicable load capacity at that speed;

2.13 The application shall be accompanied, in triplicate, by details of the major features of the tread pattern which, if changed, may have an effect on the results of the test requirements. This may be by drawing, photograph or description but must be sufficient to allow the Type Approval Authority or technical service to determine the likely effect of any changes. The effect of any minor changes will normally be determined during the Conformity of Production checks.

The application shall also include, in triplicate, a sketch of the envelope of the inflated tyre mounted on the measuring rim, showing the dimensions required in 2.8 above.

Drawings or photographs of the sidewall and tread shall be submitted once production has been established, but no longer than one year after the date of issue of the type approval.

Annex 4

[ISSUES RELATED TO THE SELECTION AND INSTALLATION OF TYRES FOR NEW VEHICLES]

1 The tyre for any particular vehicle shall be determined by the vehicle manufacturer and the choice between tyre groups will be related to the duty and performance requirements of the tyre in service.

2 All of the tyres shall have the same structure. However, in the case where a temporary use spare tyre is supplied or used, the structure of this tyre may be different from that of the other tyres fitted.

3 All of the tyres fitted to the same axle shall be the same in all respects, for example tyre designation as given in paragraph 2.1.3 of Annex 1 to this regulation, manufacturer and *manufacturer's type reference.*

4 The space in which the wheel and tyre assembly revolves shall be sufficient to allow unrestricted movement under all conditions of suspension and steering position, using tyres produced to the maximum dimensions relative to the size designation, including the *allowance for growth in service, as given in this Regulation. For a given tyre size* designation it shall not be permissible for a vehicle manufacturer to specify tyres to be produced to closer dimensional tolerances than those given in this Regulation.

5 The load capacity of each tyre shall, at the maximum design speed of the vehicle and at the inflation pressure specified by the vehicle manufacturer and multiplied by the number *of tyres on the axle, be equal to, or greater than, the maximum permissible mass for the* axle.

In addition, the load capacity of any tyre shall be such that 88% of this value shall be equal to, or greater than, the mass borne by the tyre in the normal vehicle load condition, *this being the sum of:*

- the mass of the vehicle in running order (including coolant, oils, fuel, tools and spare wheel (if supplied) but not including the driver,

PLUS EITHER:

- in the case of a vehicle designated as having up to four passenger seats, two masses of 68kg each, located one on each of the front seats,

OR:

- in the case of a vehicle designated as having five or more passenger seats, three masses of 68kg each, located one on each of the front seats and one on any other seat,

PLUS:

- an additional mass of 7kg for each mass of 68kg, located in the luggage compartment of the vehicle.

Note that in the case of car tyres with speed ratings V, W and Y, the load capacity as indicated by the Load Index will vary according to the maximum design speed of the vehicle and the percentage of maximum load capacity versus vehicle speed is given in Appendix 1.

[6 In the case where a tyre primarily designed for use on a passenger car is fitted to a multi-purpose vehicle the load capacity shall be 10% greater than that required in accordance with paragraph 5.]

[7 In the case where a tyre primarily designed for use on a passenger car is fitted to a trailer having a maximum permissible laden mass less than 3500kg and where that trailer is subject to a maximum operating speed not exceeding 100km/h (60mph), the load capacity may be increased by 10%. The inflation pressure shall be increased by 20kPa above the basic recommendation for the normal load capacity.]

8 In the case of a vehicle fitted with car tyres in twin or dual formation, the load capacity of each tyre shall be 0,27 times the maximum permissible mass for the axle

9 The load capacity of any tyre supplied or fitted as a spare tyre shall be equal to or greater than the relevant share of the mass borne by the most heavily laden axle at the maximum permissible vehicle mass.

10 Subject to any allowance given by this Regulation with regard to Maximum application load capacity as defined in 3.1.13.4 or Variation of load capacity with speed as defined in 3.1.13.5 of this Regulation, the speed capability of each tyre, with the exception of any temporary use spare tyre supplied or fitted, shall be equal to, or greater than the maximum design speed of the vehicle.

However, in the case of a vehicle fitted with special occasional use tyres such as snow or special use tyres, as defined in 3, the speed capability may be the lesser of either the maximum design speed of the vehicle and:

- 160km/h in the case of car tyres

If the maximum designed speed is greater than that indicated by the speed symbol applied to the snow or special tyre, a warning label, specifying the maximum speed capability of the snow or special tyres, shall be permanently and prominently displayed in a position visible to the driver.

11 Tyres shall be fitted to appropriate rims as given in the publications listed in 3.1.1.1.2 of Annex 1 to this Regulation. In the case of tubeless car tyres fitted on 5° tapered bead seat rims these shall incorporate features which prevent the tyre bead from being dislodged from the rim in the event of loss of inflation pressure [or side thrust during cornering].

12 In the case of vehicles fitted with "run flat" tyres , these shall only be fitted in conjunction with inflation pressure monitoring devices to warn the driver of any significant loss of pressure in the tyre.

13 A "Uni-Directional" tyre shall not be supplied as a spare tyre.

14 In addition to the case of temporary use spare tyres as defined in 3.1.7 of this Regulation, any spare tyre which differs in terms of size designation or structure from those fitted to the other wheels or where the wheel to which the spare tyre is fitted has a different offset from that of the other wheels, the spare tyre and wheel assembly shall be considered to be a temporary use spare tyre and wheel assembly, or temporary use spare unit. The spare tyre and wheel assembly and the vehicle for which it is supplied or on which it is fitted, shall satisfy the following requirements:

15.1 When tested in accordance with the procedure given in Appendix 2, the stopping distance prescribed below shall be obtained without any wheel locking, deviation of the vehicle from its intended course, abnormal vibration, abnormal wear of the tyre during the test or without any excessive steering correction being necessary during the test. The stopping distance shall not exceed 50,7m from 80km/h.

15.2 The tyre shall have a minimum speed capability of symbol "L", corresponding to a speed of 120km/h;

15.3 The tyre and wheel assembly shall be permanently and legibly marked with an 80km/h (50mph) maximum speed warning notice as shown below, displayed in a prominent position on the outer face as fitted to the vehicle.

TEMPORARY USE ONLY MAXIMUM SPEED

80 km/h / 50 mph

Upper case letters of the text shall be at least 5mm high and the numbers "80" and "50" shall be at least 20mm high with the elements which make up each character of the number at least 3mm line thickness. Lower case text shall be at least a line height of 5mm. All text shall be enclosed in a border and be on a background of contrasting colour.

NOTE: The layout of the notice may need further consideration as to its practicality.

15.4 There shall be either a warning notice permanently affixed near the spare wheel stowage area and clearly visible to the user or a warning instruction in the driver's handbook indicating the conditions of use of the temporary use spare tyre including an instruction to drive with care when the unit is in use, to install a normal tyre and wheel assembly as soon as possible, not to use more than one temporary use spare tyre and wheel assembly at any one time and details of the inflation pressure for the temporary use spare tyre.

16 Where a spare tyre is carried in an uninflated or "folded" condition, the vehicle shall be equipped with an inflation device capable of inflating the spare tyre in a maximum of five minutes and clear instructions on the use of the device shall be given, together with details of the inflation pressure.

17 A temporary use spare tyre and wheel assembly shall only be supplied and fitted to a vehicle primarily designed as a passenger vehicle for the carriage of up to a maximum of eight passengers, plus the driver, and a maximum permissible mass not exceeding [2 500kg]. A temporary use spare tyre and wheel assembly shall not be supplied or fitted to a motor bicycle or motor tricycle. Only one temporary use spare tyre and wheel assembly shall be supplied for, and fitted to, any vehicle at any one time.

Appendix 1

MAXIMUM APPLICATION LOAD CAPACITY – CAR TYRES

Percentage of Maximum Load Capacity versus Vehicle Speed

Speed capability of Vehicle km/h	**Speed symbol of Tyre**			
	H %	V %	W %	Y %
210	100	100	100	100
220	-	97	100	100
230	-	94	100	100
240	-	91	100	100
250	-	-	95	100
260	-	-	90	100
270	-	-	85	100
280	-	-	-	95
290	-	-	-	90
300	-	-	-	85

NOTE:

1 For intermediate vehicle speeds, linear interpolation of the Percentage of Maximum Load Capacity is permitted.

2 For all tyres with a speed symbol H and below, the tyre's maximum application load capacity is equal to the maximum load indicated by the load index at the maximum speed indicated by the speed symbol.

3 For tyres identified as ZR , that is with speed capability greater than 300km/h, the load capability at the relevant speed will be specified by the tyre manufacturer.