97723

Prepared for NHTSA-00-7013-38

DOT/NATIONAL HIGHWAY TRAFFIC SAFETY ADMINISTRATION
OFFICE of CONTRACTS and PROCUREMENT, NAD-30
400 SEVENTH STREET, SW
WASHINGTON, D.C. 20590

FINAL REPORT

VOLUME 1

Task Order 005

Contract No. DTNH22-96-D-12003
Project No. NPS –30-0-02034

Comparison of Results
Task Order 001 & Task Order 003

"Advanced Air Bag Systems – Cost, Weight, and Lead Time Analysis: Tear Down Analysis of Advanced Technology Air Bag Systems"

Bruce C. Spinney COTR

May 28, 2000

Prepared by

LUDTKE & ASSOCIATES
6200 29 Mile Road

Washington, MI. 48094-1311

Phone: 810-752-5645

00 MAR -7 AM 11:31

TABLE of CONTENTS

TASK Order 005

COMPARISON: OCCUPANT RESTRAINT SYSTEMS, TASK 01 vs TASK 03

DESCRIPTION	PAGE NO.
VOLUME I -	
ACKNOWLEDGEMENT	i
ABSTRACT	ii
LIST of FIGURES	iv
LIST of TABLES	vii
1.0 - INTRODUCTION	1-1
2.0 - EXECUTIVE SUMMARY, COMPARISON: - TASK ORDER 001 (BMW 528i &CHRYSLER CIRRUS OCCUPANT RESTRAINT SYSTEMS) vs TASK ORDER 003 COMPONENT UPGRADES (FORD TAURUS DRIVER & FRT PASSENGER AIR BAGS, SEAT BELT WITH PRETENSIONER, FRT PASSENGER OCCUPANT DETECTION SENSOR, BMW Z3 AIR BAGS, VOLVO HEAD AIR BAG, KIA KNEEBOLSTER AIR BAG)	2-1
3.0 - DISCUSSION - DESIGN DIFFERENCES; TASK ORDER 001 vs TASK ORDER 003 (as outlined in SECTION 2.0, EXECUTIVE SUMMARY)	3-1
VOLUME II -	
4.0 - APPENDIX - A: OPERATIONAL SCHEMATICS AND DECRIPTIONS OF OCCUPANT RESTRAINT SYSTEMS	A-1
5.0 - APPENDIX - B: PHOTOS & MICELLEANEOUS DATA of COMPONENTS ANALYZED IN TASK ORDER 001 & TASK ORDER 003	B-1
VOLUME III -	
6.0 - APPENDIX - C: ASSET CENTER COSTING METHODOLOGY	C-1
7.0 - APPENDIX - D: STOCK LIST, ADVANCED AIR BAG SYSTEM COMPONENTS; TASK 0RDER 001 & TASK ORDER 003	D-1

ACKNOWLEDGMENT

The principals conducting this Project would like to acknowledge the leadership; support and contribution of Barbara Faigin, Division Leader, and Bruce C. Spinney, Project COTR; Planning & Analysis Division, NHTSA, toward the Advanced Air Bag Projects; i.e., Task 01, Task 03, and this one Task 05. It was very enjoyable working with Ms. Faigin and Mr. Spinney and it was a combination of their effort and that of the contract team (Ludtke & Associates) that made it possible to generate the necessary data for the successful conclusion for this report. N. F. Ludtke and R. F. Heitsch, W. Lieberman, W. Osen, and R. Gladstone were the key principals of Ludtke & Associates who where contracted to conduct this study.

On a sadder note; Mr. Heitsch passed mid-way during the Task 03 effort. Mr. Heitsch had worked on NHTSA cost analysis projects since 1985, when he joined us at Pioneer Engineering. He brought to the NHTSA projects a wealth of knowledge relative to automotive manufacturing methods and processes. The results of his efforts were highly regarded and unquestioned. This was true, not only at NHTSA, but with people at the Gas Research Institute (GRI), the Department of Energy (DOE), Teledyne, American Institute of Steel and Iron (AISI), Ford, General Motors, Chrysler and many other organizations that we conducted projects for. He was also a good friend and will be missed by all who had the pleasure of working with him.

ABSTRACT

NHTSA has conducted two cost, weight and lead time studies of advanced occupant restraint systems. The purpose was to develop data for support of future rule making initiatives as new technology emerges. The objective of this Task (005) is to present a comparison of the results and bracket representative costs of these systems and their major components.

The first study,Task 001, analyzed the following occupant restraint systems:

- BMW 528i MY 1998 - Driver and passenger air bag systems with single stage inflators, side door air bag systems, front seatbelt systems with pretensioners, a passenger seat occupant sensor, and a head air bag system (tubular type), kneebolster, front and side crash sensors, and control module electronics.
- Chrysler Cirrus MY 1998 - Driver and passenger air bag systems with single stage inflators, front seat belt systems (no pretensioner), kneebolster, front crash sensor, and control module electronics.

The second study, Task 003, analyzed the following occupant restraint systems:

- BMW Z3 MY 2000 - Driver and passenger air bag systems with dual stage Inflators, the passenger seat occupant sensor, control module electronics, and front crash sensor.
- Ford Taurus MY 2000 - Driver and passenger air bag systems with duel stage inflators, front seat belt systems with pretensioners, control module, and front crash sensors.
- Volvo MY 1999 - Head air bag system (curtain type).
- KIA MY 1999 - Driver side kneebolster air bag system

The results of these two studies are presented in the Chart on page iii. Variable manufacturing costs, dealer costs, and estimated manufacturers (suggested) retail costs are listed for each major subsystem.

The costs between similar subsystems vary within a relatively small bracket. This is due to design and material differences and any inflation that occurred during the period between the two studies. These data also bracket the cost range that could be expected for similar units sold within the U.S. in the near future.

The costs for similar subsystems can also be interchanged to test for the potentail impacts of different restraint system combinations. As manufacturers delegate more responsibility to suppliers for the packaging of occupant restraint systems, this kind of "mixing and matching" will become more prevalent. It should be noted that all costs are based on U.S. Automotive (Detroit area) labor and material rates.

Summary - Variable Manufacturing Costs, Dealer Costs, & Retail Price Impacts

Task/Vehicle	Driver A/B	Pass-enger A/B	Head A/B	Door A/B	Seat Belt	Seat Sensor	Kneebolster & KIA A/B Kneebolster	Control Module & Elect	Total Per Vehicle		
Notes =	(a)	(a)	(b)	(c)			(d)	(e)			
Qty/Veh =	1	1	2	2	2	1	1				
	Var. Mfg Cost	Var. Mfg Cost	Var. Mfg Cost	Var. Mfg Cost	Var. Mfg Cost	Var. Mfg Cost	Var. Mfg Cost	Var. Mfg Cost	Var. Mfg Cost	Dealer Cost	Retail Price (MSRP)
Task Order 001-											
BMW 528i	41.34	63.70	85.00	40.82	46.20	2.44	3.10	200.87	483.47	657.52	729.85
Chrysler Cirrus	45.36	72.72	---	---	36.22	---	2.16	78.04	234.50	318.92	354.00
Task Order 003 -											
BMW Z3	47.59	73.20	---	---	---	3.56	---	115.12	239.47	325.68	361.50
Ford Taurus	56.06	68.53	---	---	58.26	---	---	63.70	246.55	335.31	372.19
Volvo	---	---	78.20	---	---	---	---	---	78.20	106.35	118.05
KIA	---	---	---	---	---	---	19.26	---	19.26	26.19	29.07

Notes:

(a) As noted earlier, the Task Order 001 driver and passenger air bag systems employed a single stage inflator. Task Order 003 driver and passenger air bag systems employed two stage inflators.

(b) The BMW vehicles use a tubular type head air bag system with a solid propellant inflator. Volvo uses a curtain type head air bag system with a pressurized inflator system. The costs are based on two per vehicle.

(c) The Chrysler Cirrus seat belt reflects a typical seat belt system found in most vehicles to date: The BMW 528i and the Ford Taurus seat belt systems employ pretensioner units that fire a solid propellant charge to take up any slack in the seat belt at crash impact.

(d) The BMW 528i and Chrysler Cirrus driver side kneebolsters are typical of these found in most most vehicles to date. The costs have been prorated to reflect that portion of the design incorporated to reduce lower extremity injuries. The KIA kneebolster contains an air bag for protection of lower extremities. The BMW 528i and Chrysler Cirrus kneebolster costs include both driver and passenger sides. The KIA air bag kneebolster is for driver side only.

(e) The BMW 528i Control Module & Electrical costs include the control module, front and side crash sensors, wiring attributed to the occupant restraint system, and a battery disconnect unit. The Chrysler Cirrus costs include a control module, frontal crash sensor, and wiring. The Ford Taurus costs include a control module. The BMW Z3 costs include a control module, wiring harness and switch pad.

LIST of FIGURES

Page 1

DESCRIPTION	FIGURE NO.	PAGE NO.
VOLUME I		
ILLUSTRATIONS-		
BMW 528i & Chrysler Cirrus MY 1998 Occupant Restrain Safety System	2-1	2-2
BMW Z3 & Ford Taurus MY 2000 Occupant Restraint Safety Systems	2-2	2-3
BMW 528i and Volvo Head Air Bag Systems	2-3	2-4
KIA Kneebolster Air Bag System & Chrysler Cirrus (Passive) Kneebolste	2-4	2-5
BMW 528i MY 1998 Occupant Restrain Safety Systems	3-1	3-2
Chrysler Cirrus MY 1998 Occupant Restrain Safety Systems	3-2	3-3
Ford Taurus MY 2000 Occupant Restraint Safety Systems	3-3	3-4
BMW Z3 MY 2000 Occupant Restraint Safety Systems	3-4	3-5
Volvo Head Air Bag System	3-5	3-6
KIA Kneebolster Air Bag System	3-6	3-7
Chrysler Cirrus MY 1998 Driver Air Bag System	3-7	3-10
BMW 528i MY 1998 Driver Air Bag System	3-8	3-11
Chrysler Cirrus MY 1998 Passenger Air Bag System	3-9	3-12
BMW 528i MY 1998 Passenger Air Bag System	3-10	3-13
Ford Taurus MY 2000 Driver Air Bag System	3-11	3-14
Ford Taurus MY 2000 Passenger Air Bag System	3-12	3-15
BMW Z3 MY 2000 Driver Air Bag System	3-13	3-16
BMW Z3 MY 2000 Passenger Air Bag System	3-14	3-17
BMW 528i MY 1998 Seat Belt & Pretensioner System	3-15	3-20
Ford Taurus MY 2000 Seat Belt & Pretensioner System	3-16	3-21
Chrysler Cirrus MY 1998 Seat Belt System	3-17	3-22
Volvo Head Air Bag System	3-18	3-25
BMW 528i Head Air Bag System	3-19	3-26
KIA Kneebolster Air Bag System (Photograph of Assembly)	3-20	3-29
KIA Kneebolster Air Bag System (Photograph of Disassembled Parts)	3-21	3-30
Chrysler Cirrus MY 1998 Kneebolster (Photograph)	3-22	3-31
BMW 528i MY 1998 & BMW Z3 MY 2000 Pass. Seat Occupant Sensor	3-23	3-33

LIST of FIGURES

Page 2

DESCRIPTION	FIGURE NO.	PAGE NO.
VOLUME II -APPENDIX A		
BMW 528i Occupant Restraint System	A-1	A-4
Schematic - BMW 528i Occupant Restraint System	A-2	A-5
Photo - Hardware, BMW 528i Occupant Restraint System	A-3	A-6
BMW 528i Door Air Bag Location	A-4	A-8
BMW Head & Door Air Bag Location & Operational Schematic	A-5	A-9
BMW 528i Belt Tensioner Operational Schematic	A-6	A-10
BMW 528i Seat Occupant Sensor	A-7	A-11
BMW 528i Battery Cable Disconnect Safety Terminal	A-8	A-12
BMW 528i Driver Side Air Bag Components Schematic	A-9	A-13
BMW 528i Passenger Side Air Bag Components Schematic	A-10	A-17
BMW 528i Passenger Air Bag Lid	A-11	A-18
BMW 528I Door Air Bag Components	A-12	A-19
BMW 528i Head Air Bag Components	A-13	A-21
BMW 528i Seat Belt System with Pretensioner	A-14	A-22
BMW 528i Seat Occupant Sensor	A-15	A-24
BMW 528i Knee Bolster	A-16	A-25
BMW 528i Wire Harness Assembly	A-17	A-27
BMW 528i Control Module	A-18	A-28
BMW 528i Side Crash Sensor	A-19	A-29
Chrysler Cirrus Occupant Restraint Safety System	A-20	A-31
Schematic - Chrysler Cirrus Occupant Restraint System Operation	A-21	A-32
Sketch - Chrysler Cirrus DriverAir Bag Module	A-22	A-33
Sketch - Chrysler Cirrus Driver and Passenger Air Bag Modules	A-23	A-34
Sketch - Chrysler Cirrus Instrument Panel Components	A-25	A-35
Sketch - Chrysler Cirrus Control Module Location	A-26	A-36
Sketch - Chrysler Cirrus Seat Belt Location	A-27	A-37
Chrysler Cirrus Driver Side Air Bag Components	A-28	A-40
Chrysler Cirrus Passenger Side Air Bag Components	A-29	A-42
Chrysler Cirrus Control Module	A-30	A-43
Chrysler Cirrus Knee Bolster	A-31	A-44
Chrysler Cirrus Seat Belt System	A-32	A-46
Chrysler Cirrus Wire Harness	A-33	A-47

LIST of FIGURES

Page 3

DESCRIPTION	FIGURE NO.	PAGE NO.
VOLUME II - Appendix B		
Photographs, Vehicle Occupant Restaint System Components	B-1 to B-51	B-3 to B-53
VOLUME III - Appendix C		
None		
VOLUME III - Appendix D		
None		

LIST of TABLES

Page 1

DESCRIPTION	TABLE NO.	PAGE NO.
VOLUME I		
DRIVER AND PASSENGER AIR BAG ASSY COMPARISON,---------- TASK ORDER 001 AND 003	2-1	2-6
SEAT BELT & PRETENSIONER ASSY COMPARISON, ---------- TASK ORDER 001 AND TASK ORDER 003	2-2	2-7
HEAD AIR BAG COMPARISON - TASK ORDER 001 vs TASK---------- ORDER 003	2-3	2-8
KNEEBOLSTER & KNEEBOLSTER AIR BAG ASSY COMPARISON,---- TASK ORDER 001 AND TASK ORDER 003, DRIVER SIDE ONLY	2-4	2-9
PASSENGER SEAT OCCUPANT SENSOR COMPARISON,---------- TASK ORDER 001 AND TASK ORDER 003	2-5	2-10
DRIVER AND PASSENGER AIR BAG ASSY COMPARISON,---------- TASK ORDER 001 AND 003	3-1	3-9
SEAT BELT & PRETENSIONER ASSY COMPARISON, ---------- TASK ORDER 001 AND TASK ORDER 003	3-2	3-19
HEAD AIR BAG COMPARISON - TASK ORDER 001 vs TASK ---------- ORDER 003	3-3	3-24
KNEEBOLSTER & KNEEBOLSTER AIR BAG ASSY COMPARISON,----	3-4	3-28
PASSENGER SEAT OCCUPANT SENSOR COMPARISON,----------	3-5	3-32
OCCUPANT RESTRAINT SYSTEM COMPONENT LEAD TIME ESTIMA	3-6	3-34
CAPITAL INVESTMENT ESTIMATES FOR DEVELOPING OCCUPANT-SAFETY SYSTEMS	3-7	3-36

LIST of TABLES

Page 2

DESCRIPTION	TABLE NO.	PAGE NO.
VOLUME II		
Appendix A & B - None		
VOLUME III - APPENDIX C		
Process Sheet	C-1	C-4
Flow Chart - Cost Build Up, Basic Part to Final Assembly	C-2	C-9
Flow Chart - Determination of Mfg. and Component Cost	C-3	C-10
Process Sheet	C-4	C-11
Manufacturing Cost Analysis	C-5	C-12
Burden Factors	C-6	C-14
VOLUME III - APPENDIX D		
Stock Lists (Costs) of Components, Occupant Restaint Systems Air Bag Systems Seat Belt Systems, Control Modules, etc. for Task 001 and Task 003	D-1 to D-144	D-3 to D-146

1.0 - INTRODUCTION

The National Highway Traffic Safety Administration (NHTSA) recently completed two comprehensive cost studies on advanced occupant restraint systems. The objectives of those efforts were to develop data for support of future rule making initiatives as new technology emerges. The objective of this task is to compare the results of these studies and to present the bracket within which the systems, and their components, costs lie.

The systems studied under Task Order 001 are:

- BMW 528i MY 1998 driver, passenger, head and door air bag systems, the seat belt system with a pretensioner, and kneebolsters. Also included were a passenger seat occupant sensor, a control module that controls both the front and side air bags, a battery disconnect unit, and front and side crash sensors. All air bag systems contained single stage inflators.

- Chrysler Cirrus MY 1998 driver and passenger air bag systems with single stage inflators, a "typical" seat belt system, and kneebolsters.

Those systems evaluated under Task Order 003 are:

- Ford Taurus MY 2000 driver and passenger air bag systems, frontal crash sensors, a control module, and the front seat belt systems with a pretensioner. The Ford system responds to different crash conditions by offering dual stage inflators.

- BMW, MY 2000, Z3 driver and passenger air bag systems with dual stage inflators, and an occupant detection system (does not include the front seat belt systems).

- Volvo head (curtain) air bag system

- KIA Motors knee bolster air bag system

The resulting costs and lead-time estimates are based on U.S., Detroit area, automotive practices, material costs and labor rates. The Following Sections discuss the results and other supporting information conducted under this phase.

2.0 - EXECUTIVE SUMMARY

This Section summarizes the costs and lead-time estimates for occupant restraint systems that were developed in two previous Task Orders. The estimates presented herein are confined to frontal impact systems, except for the BMW and Volvo head air bag systems which are designed to the head in side impacts. Task Order 001 also included a tear down analysis of the BMW door mounted side impact air bag system and associated satellite crash sensors. However, comparable systems were not evaluated in Task 003. Analysis of side impact systems will likely be conducted at a later date.

The systems evaluated under Task Order 001 were:

- The BMW 528i MY 1998 front occupant protection system including driver and passenger air bag systems with single stage inflators, head and door air bag systems, front passenger seat occupant sensor, seat belt systems with pretensioners, knee bolster modifications, front/side crash sensors, electronic control module, wiring harness modifications, and a battery disconnect system (Figure 2-1).

- The Chrysler Cirrus MY 1998 driver and passenger air bag systems with single stage inflators, a "typical" seat belt system, knee bolster modifications, a control module, and wiring harness modifications (Figure 2-1).

Those systems evaluated under Task Order 003 were:

- The Ford Taurus MY 2000 driver and passenger air bag systems with two stage inflators, front seat belt systems with pretensioners, frontal crash sensor, a control module, and wiring harness modifications (Figure 2-2).

- The BMW Z3 MY 2000 driver and passenger air bag systems with two stage inflators, and a passenger seat occupant detection sensor. The analysis did not include the front seat belt systems, control module, or crash sensors (Figure 2-2).

- The Volvo MY 1999 head (curtain type) air bag system (Figure 2-3).

- The KIA Motors MY 1999 knee bolster air bag system (Figure 2-4).

Cost comparisons of like systems; i.e., driver and passenger air bag systems, head air bag systems, seat belt systems, seat sensor, and knee bolsters are presented in Tables 2-1 through 2-5. These systems present a range of designs from the basic Chrysler Cirrus MY 1998 frontal only air bag / 3 point belt system, to advanced systems which could combine the Ford Taurus MY 2000 frontal air bag, the Volvo MY 1999 head air bag, and the KIA MY 1999 knee bolster air bag.

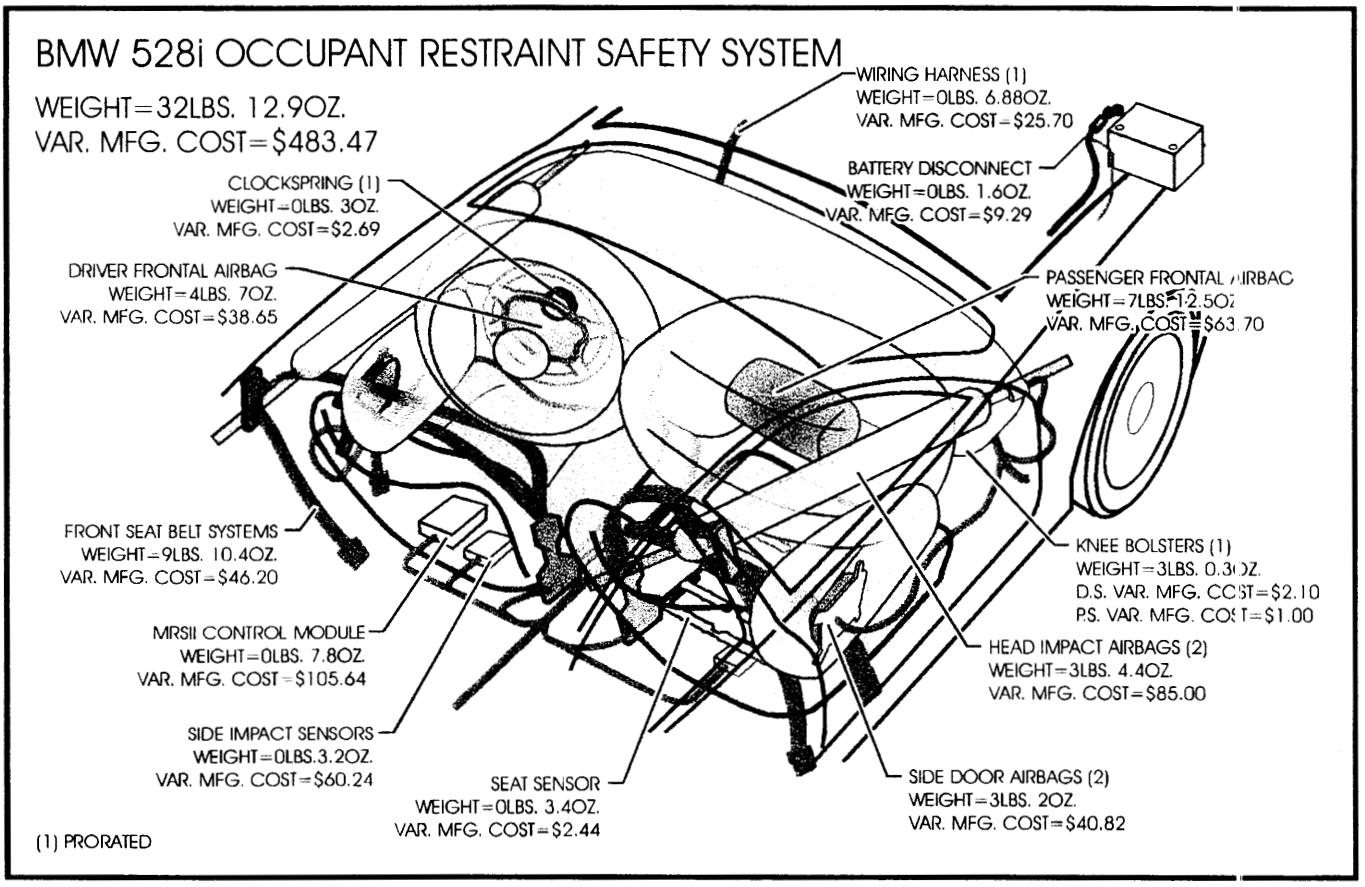
BMW 528i OCCUPANT RESTRAINT SAFETY SYSTEM
WEIGHT=32LBS. 12.9OZ.
VAR. MFG. COST=$483.47
WIRING HARNESS (1)
WEIGHT=0LBS. 6.88OZ.
VAR. MFG. COST=$25.70
BATTERY DISCONNECT
WEIGHT=0LBS. 1.6OZ.
VAR. MFG. COST=$9.29
CLOCKSPRING (1)
WEIGHT=0LBS. 3OZ.
VAR. MFG. COST=$2.69
DRIVER FRONTAL AIRBAG
WEIGHT=4LBS. 7OZ.
VAR. MFG. COST=$38.65
PASSENGER FRONTAL AIRBAG
WEIGHT=7LBS. 12.5OZ.
VAR. MFG. COST=$63.70
FRONT SEAT BELT SYSTEMS
WEIGHT=9LBS. 10.4OZ.
VAR. MFG. COST=$46.20
KNEE BOLSTERS (1)
WEIGHT=3LBS. 0.3OZ.
D.S. VAR. MFG. COST=$2.10
P.S. VAR. MFG. COST=$1.00
MRSII CONTROL MODULE
WEIGHT=0LBS. 7.8OZ.
VAR. MFG. COST=$105.64
HEAD IMPACT AIRBAGS (2)
WEIGHT=3LBS. 4.4OZ.
VAR. MFG. COST=$85.00
SIDE IMPACT SENSORS
WEIGHT=0LBS.3.2OZ.
VAR. MFG. COST=$60.24
SEAT SENSOR
WEIGHT=0LBS. 3.4OZ.
VAR. MFG. COST=$2.44
SIDE DOOR AIRBAGS (2)
WEIGHT=3LBS. 2OZ.
VAR. MFG. COST=$40.82
(1) PRORATED

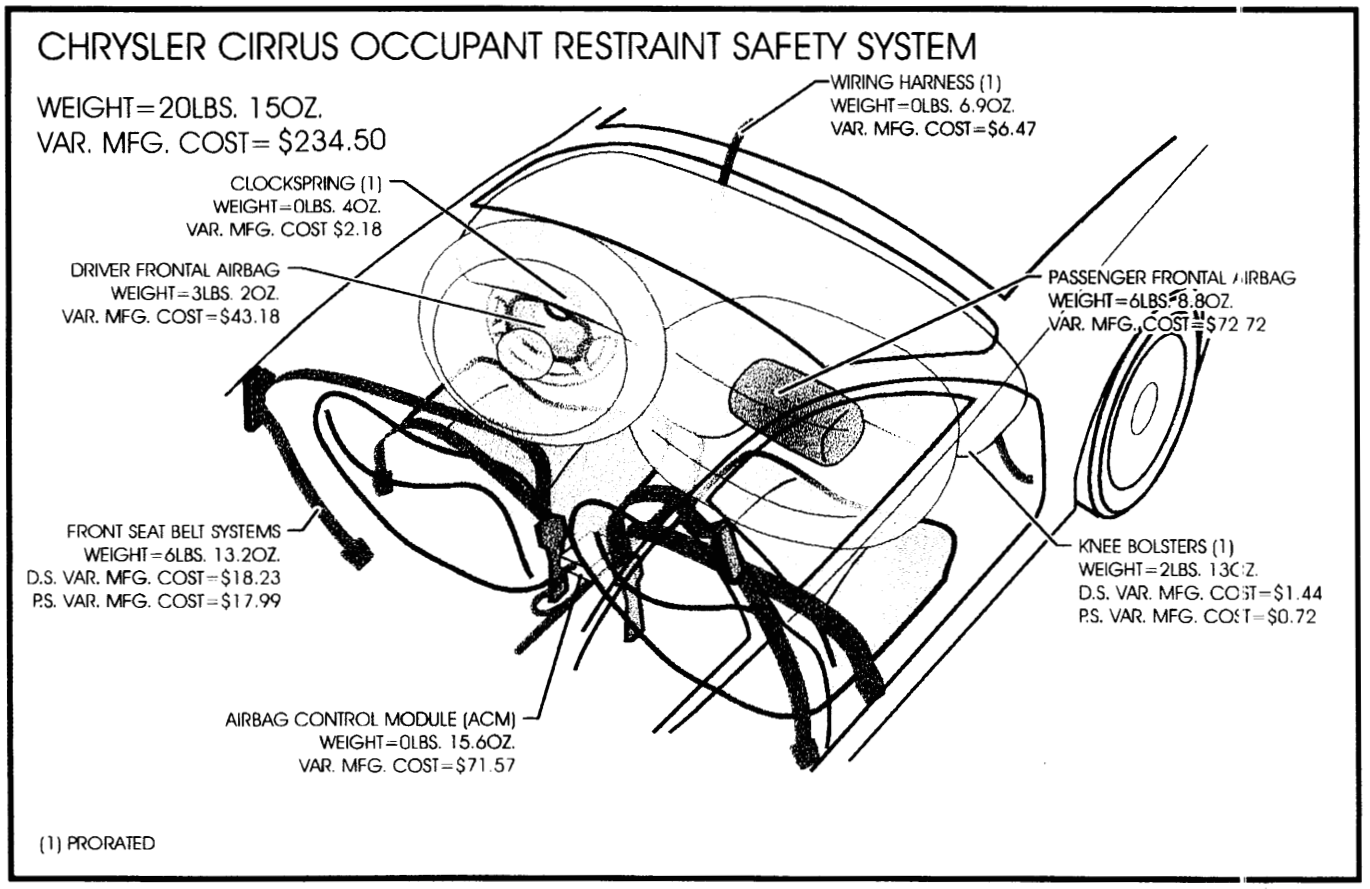
CHRYSLER CIRRUS OCCUPANT RESTRAINT SAFETY SYSTEM
WEIGHT=20LBS. 15OZ.
VAR. MFG. COST= $234.50
WIRING HARNESS (1)
WEIGHT=0LBS. 6.9OZ.
VAR. MFG. COST=$6.47
CLOCKSPRING (1)
WEIGHT=0LBS. 4OZ.
VAR. MFG. COST $2.18
DRIVER FRONTAL AIRBAG
WEIGHT=3LBS. 2OZ.
VAR. MFG. COST=$43.18
PASSENGER FRONTAL AIRBAG
WEIGHT=6LBS. 8.8OZ.
VAR. MFG. COST=$72.72
FRONT SEAT BELT SYSTEMS
WEIGHT=6LBS. 13.2OZ.
D.S. VAR. MFG. COST=$18.23
P.S. VAR. MFG. COST=$17.99
KNEE BOLSTERS (1)
WEIGHT=2LBS. 13OZ.
D.S. VAR. MFG. COST=$1.44
P.S. VAR. MFG. COST=$0.72
AIRBAG CONTROL MODULE (ACM)
WEIGHT=0LBS. 15.6OZ.
VAR. MFG. COST=$71.57
(1) PRORATED

Figure 2-1

Ford Taurus MY 2000 Occupant Restraint System

Weight: 24.48 lbs
Var. Mfg. Cost: $246.55

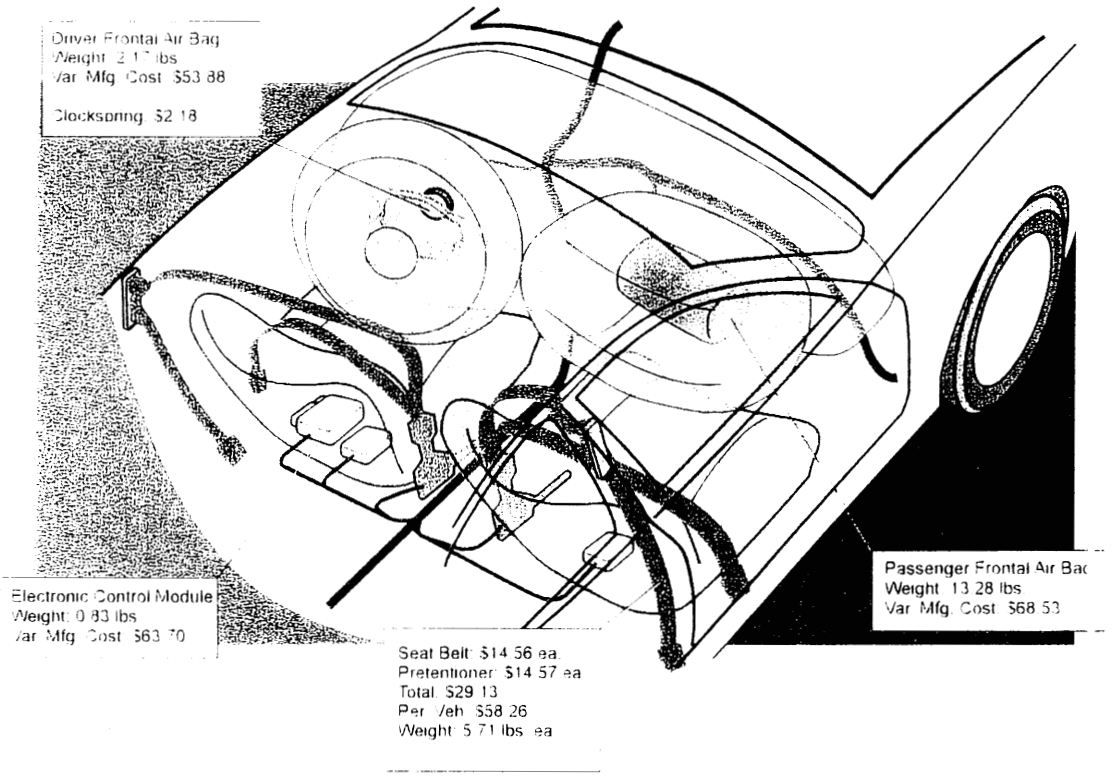

BMW Z3 MY 2000 Air Bag Restraint System

Weight: 12.40 lbs.
Var. Mfg. Cost: $239.41

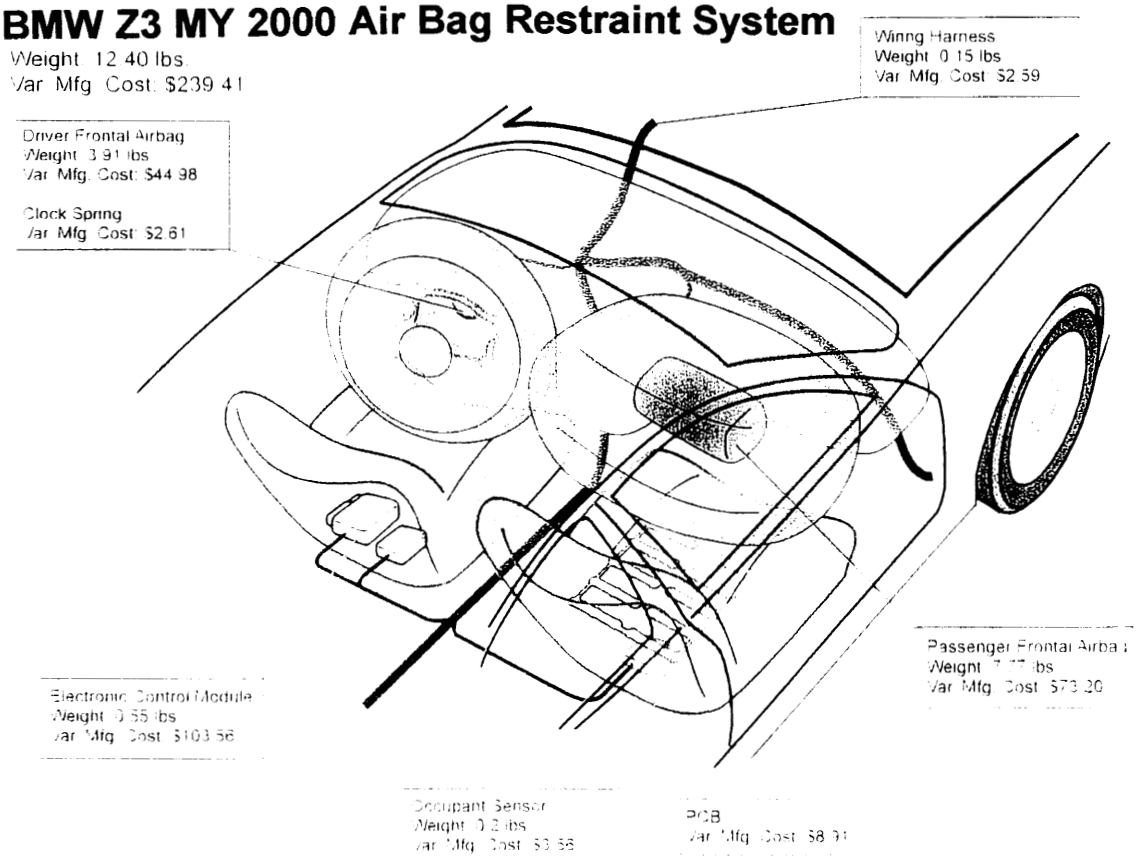

Figure 2-2

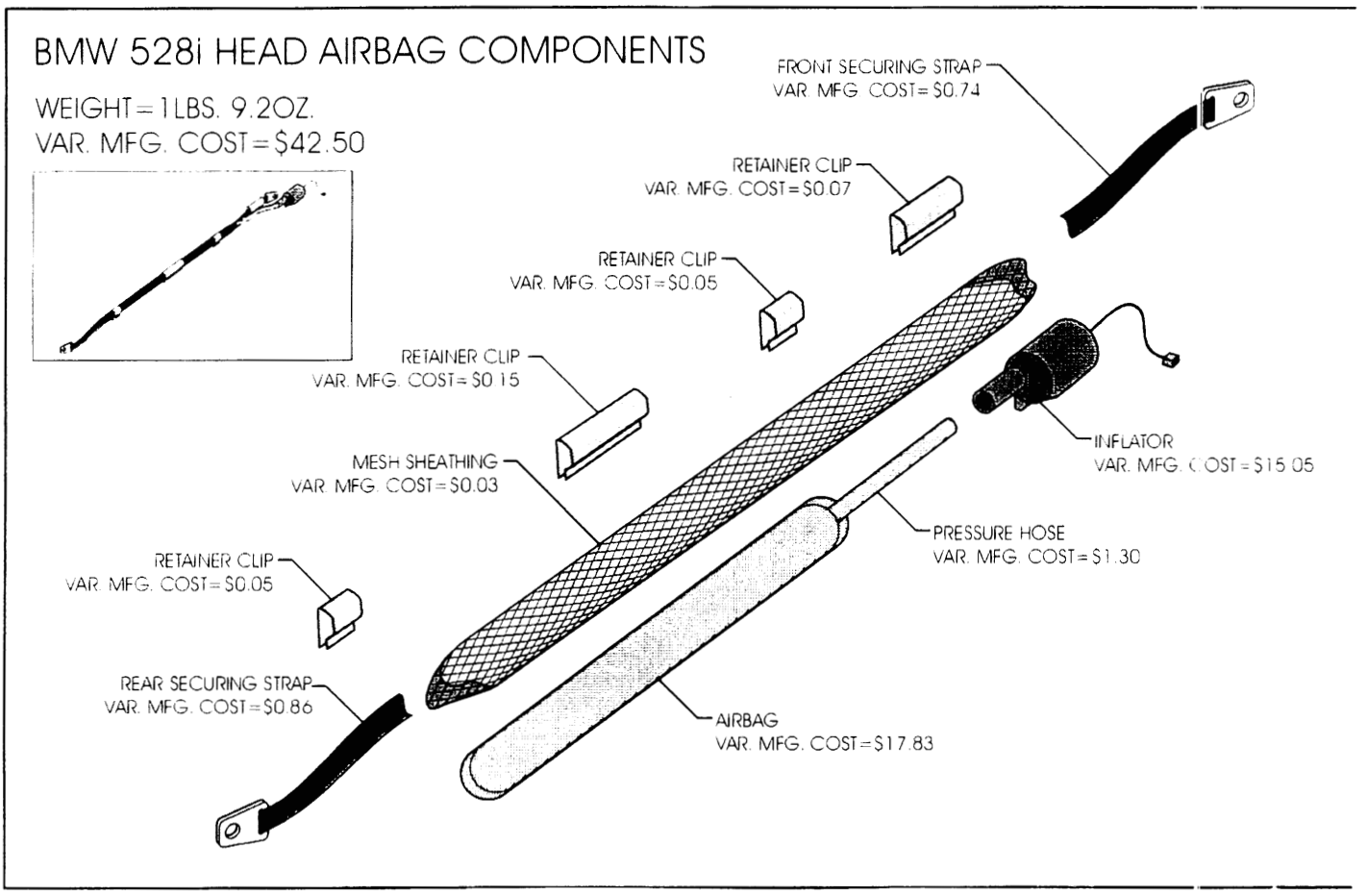
BMW 528i HEAD AIRBAG COMPONENTS
WEIGHT = 1 LBS. 9.2OZ.
VAR. MFG. COST = $42.50
FRONT SECURING STRAP
VAR. MFG. COST = $0.74
RETAINER CLIP
VAR. MFG. COST = $0.07
RETAINER CLIP
VAR. MFG. COST = $0.05
RETAINER CLIP
VAR. MFG. COST = $0.15
MESH SHEATHING
VAR. MFG. COST = $0.03
INFLATOR
VAR. MFG. COST = $15.05
PRESSURE HOSE
VAR. MFG. COST = $1.30
RETAINER CLIP
VAR. MFG. COST = $0.05
REAR SECURING STRAP
VAR. MFG. COST = $0.86
AIRBAG
VAR. MFG. COST = $17.83

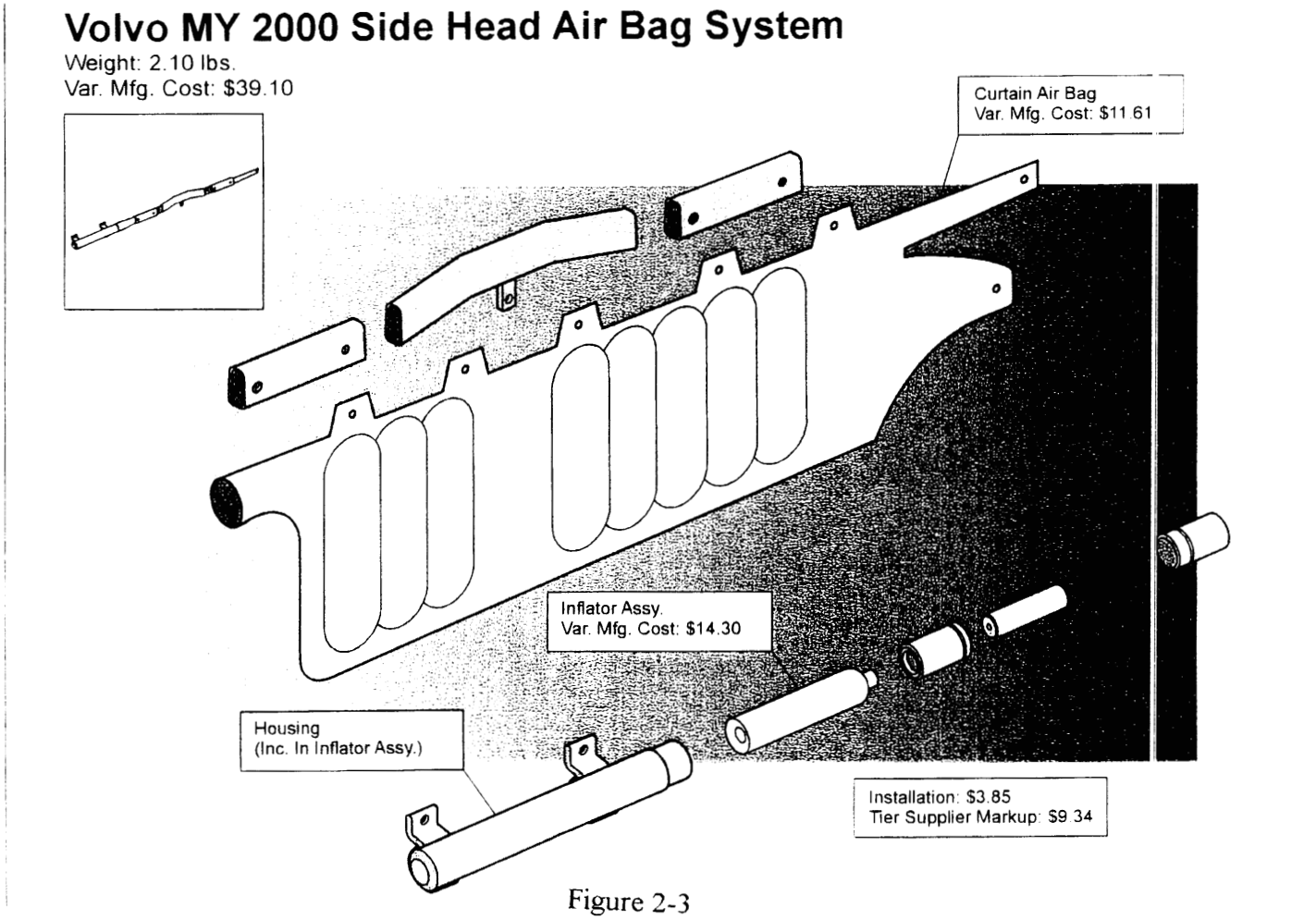
Volvo MY 2000 Side Head Air Bag System
Weight: 2.10 lbs.
Var. Mfg. Cost: $39.10
Curtain Air Bag
Var. Mfg. Cost: $11.61
Inflator Assy.
Var. Mfg. Cost: $14.30
Housing
(Inc. In Inflator Assy.)
Installation: $3.85
Tier Supplier Markup: $9.34

Figure 2-3

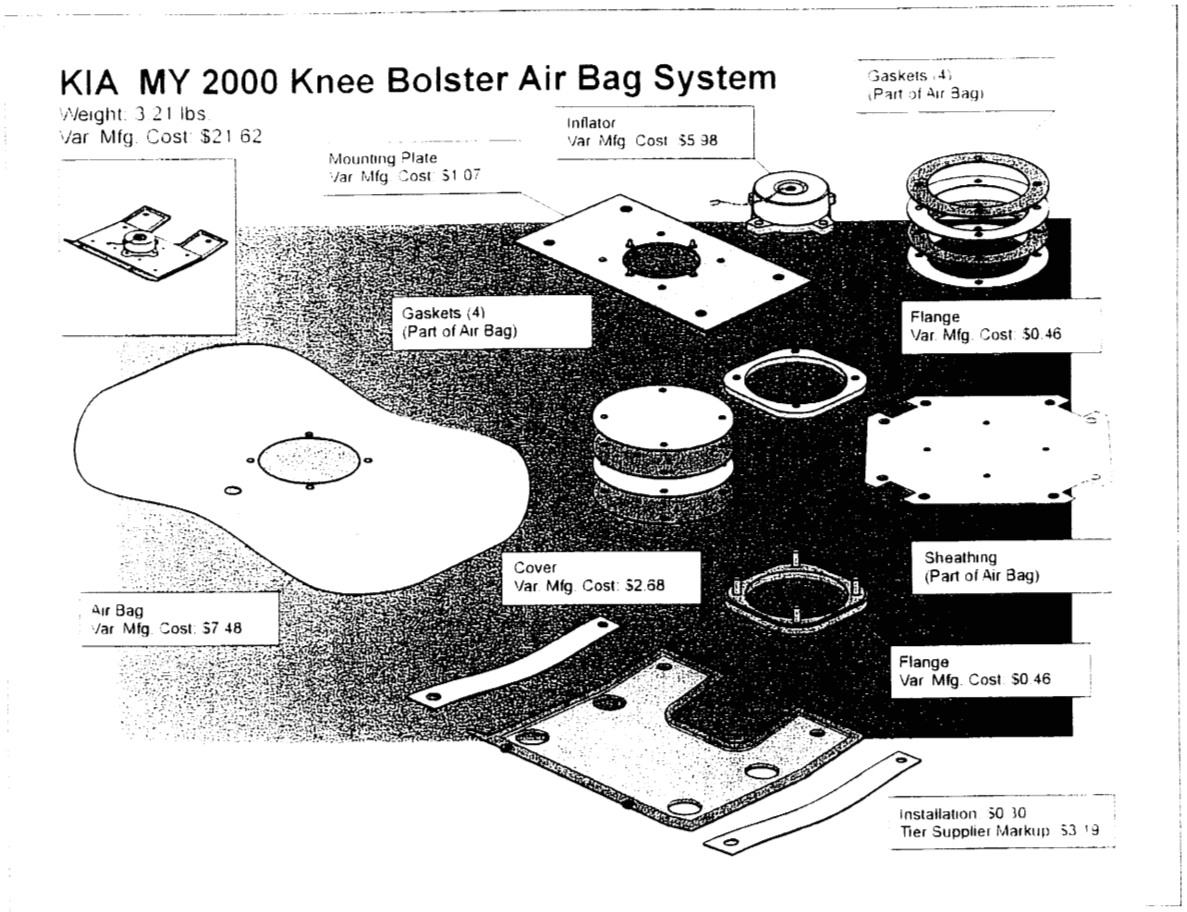

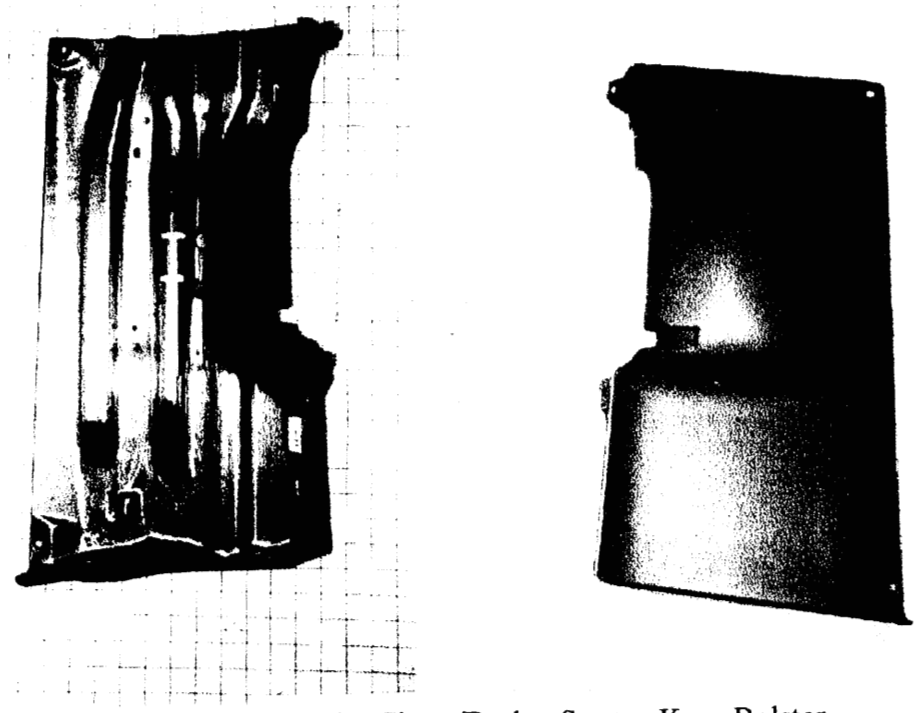

Chrysler Cirrus/Dodge Stratus Knee Bolster

Figure 2-4

DRIVER AND PASSENGER AIR BAG ASSY COST ($) COMPARISON - TASK ORDER 001 vs TASK ORDER 003 (TWO STAGE VS SINGLE STAGE INFLATORS)

Description	Direct Mat'l	Direct Labor	Vari-able Burd-en	Tier Three Mar	Tier Two Mar	Tier One Mar	Vari-able Mfg. Cost	Mfg. Mar (36%x Var)	Dealer Mar (11%x (V+M))	End User Cost	Tooling Cost x1,000	Capital Eq. Cost x1,000
TASK ORDER 003 - AIR BAG SYSTEMS WITH TWO STAGE INFLATORS (PASSENGER A/B INFLATORS ARE PRESSURIZED GAS VESSELS WITH TWO INITIATORS; DRIVER A/B INFLATORS CONTAIN TWO SOLID PROPELLANT COMPARTMENTS WITH AN IGNITER IN EACH OMPARTMENT)												
Ford Taurus, MY 2000, Driver*	22.85	4.78	8.24	0.17	7.09	12.93	56.06	20.18	7.62	83.87	938.3	4,562.0
Ford Taurus, MY 2000, Pass	34.74	4.90	7.08	0.22	10.66	10.93	68.53	24.67	9.32	102.52	1,342.0	6,948.4
BMW Z3, MY 2000, Driver*	29.24	3.68	5.28	0.62	3.96	4.81	47.59	17.13	6.47	71.19	1,055.3	4,607.0
BMW Z3, MY 2000, Pass	43.56	3.27	6.20	3.55	5.19	11.43	73.20	26.35	9.96	109.51	1,304.0	5,781.7
TASK ORDER 001 - AIR BAG SYSTEMS WITH SINGLE STAGE SOLID PROPELLANT INFLATORS												
BMW 528i, MY 1998, Driver*	22.01	3.47	5.46	0.69	4.47	5.24	41.34	14.88	5.62	61.84	1,080.8	2,311.0
BMW 528i, MY 1998, Pass	35.37	4.00	7.49	2.92	4.27	9.65	63.70	22.93	8.66	95.30	1,266.0	4,439.0
Chrysler Cirrus, MY 1998, Driver*	22.15	3.05	4.32	0.13	5.56	10.15	45.36	16.33	6.17	67.86	1,115.0	2,627.0
Chrysler Cirrus, MY 1998, Pass	39.93	4.54	9.51	0.19	9.16	9.39	72.72	26.18	9.89	108.79	1,309.0	4,219.0

* Includes Clock Spring Assy

Table 2-1

SEAT BELT & PRETENSIONER ASSY COMPARISON - TASK ORDER 001 vs. TASK ORDER 003

Description	Direct Mat'l	Direct Labor	Vari-able Burden	Tier Three Mar	Tier Two	Tier One Mar	Vari-able Mfg. Cost	Mfg. Mar (36%x Var)	Dealer Mar (11%x (V+M))	End User Cost	Tooling Cost x1,000	Capital Eq. Cost x1,000
TASK ORDER 003 - FORD MY2000 FORD TAURUS - SEAT BELT & PRETENSIONER SYSTEM												
D/S or P/S Seat Belt Assy - Total Incl. Tier Sup Markup	6.16	3.47	3.68	0.00	0.19	1.06	14.56	5.24	2.18	21.98	1,833.0	1,558.0
D/S or P/S Pretentioner Assy Total Incl. Tier Sup Markup	3.39	4.62	5.20	0.01	0.37	0.98	14.57	5.25	2.18	21.99	414.3	423.8
TASK ODER 001 - BMW 528i MY 1998 SEAT BELT & PRETENSIONER SYSTEMS												
D/S or P/S Seat Belt Assy - Total Incl. Tier Sup Markup	4.93	2.33	2.38	0.00	0.42	2.14	12.20	4.39	1.83	18.42	406.0	104.0
D/S or P/S Pretentioner Assy Total Incl. Tier Sup Markup	3.70	1.78	3.16	0.02	0.61	1.63	10.90	3.92	1.63	16.45	419.3(1)	748.8(1)
TASK ORDER 001 - CHRYSLER CIRRUS MY 1998 SEAT BELT ASSEMBLY												
Frt Driv. Seat Belt Assy - Total Incl. Tier Sup. Markup	6.61	4.14	4.44	0.16	0.30	2.58	18.23	6.56	2.73	27.52	624.5	318.0
Frt. Pass Seat Belt Assy - Total Incl. Tier Sup Markup	6.36	4.20	4.47	0.16	0.22	2.58	17.99	6.48	2.69	27.16	82.5	59.0

(1) Note: Tooling & Equipment shared by both Driver and Passenger Systems

Table 2-2

HEAD AIR BAG ASSY COST ($) COMPARISON - TASK ORDER 001 vs TASK ORDER 003

Description	Direct Mat'l	Direct Labor	Vari-able Burden	Tier Three Mar	Tier Two	Tier One Mar	Vari-able Mfg. Cost	Mfg. Mar (36%x Var)	Dealer Mar (11%x (V+M))	End User Cost	Tooling Cost x1,000	Capital Eq. Cost x1,000
TASK ORDER 003 - VOLVO MY 1999 HEAD AIR BAG (CURTAIN TYPE) ASSEMBLY												
Head Air Bag (Curtain) Assy Total Includ. Tier Sup. Markup -	21.36	1.89	6.51	0.30	3.00	6.04	39.10	14.08	5.85	59.03	473.0	1,384.0
TASK ORDER 001 - BMW SERIES 7 MY 1998 HEAD AIR BAG (TUBULAR TYPE) ASSEMBLY												
Head Air Bag (Tubular) Assy Total Includ. Tier Sup. Markup -	27.98	2.24	4.31	0.25	2.56	5.16	42.76	15.39	6.40	64.55	808.0	198.0

Table 2-3

KNEE BOLSTER & KNEE BOLSTER AIR BAG ASSY COMPARISON - TASK ORDER 001 vs TASK ORDER 003 (DRIVER SIDE ONLY)

Description	Direct Mat'l	Direct Labor	Vari-able Burden	Tier Three Mar	Tier Two Mar	Tier One Mar	Vari-able Mfg. Cost	Mfg. Mar (36%x Var)	Dealer Mar (11%x (V+M))	End User Cost	Tooling Cost x1,000	Capital Eq. Cost x1,000
TASK ORDER 003 - KIA MY 1999 KNEE BOLSTER AIR BAG ASSEMBLY												
Total Incl. Tier Sup Markup	13.69	1.80	2.94	0.20	0.30	2.69	21.62	7.78	3.23	32.64	889.9	2,215.0
TASK ORDER 001 - BMW 528i KNEE BOLSTER ASSEMBLY (NO AIR BAG, COSTS PRO-RATED, SEE NOTE)												
Driver Knee bolster (3)	0.90	0.20	0.70	0.00	0.00	0.30	2.10	0.76	0.31	3.17	220.0	653.0
TASK ORDER 001 - CHRYSLER CIRRUS KNEE BOLSTER ASSEMBLY (NO AIR BAG, COSTS PRO-RATED, SEE NOTE)												
Driver Knee bolster	0.58	0.16	0.49	0.00	0.00	0.21	1.44	0.52	0.22	2.17	150.0	567.0

Note: The Knee bolster design includes a protection for the lower extremities of the driver. However; a panel would be used in this area for esthetic purposes even if the knee bolster protection was not included in the design. Therefore, the total cost of the Knee bolster was adjusted to reflect the cost related to the lower extremity protection.

Question - What is the cost penalty for the Knee Bolster Air Bag over a padded Knee Bolster?

Estimated Cost Penalty -
The KIA Knee bolster Air Bag area would have a panel for aesthetic purposes even if the Air Bag was not included. Using the same pro-rated ratio as above for the cover and plate we can subtract a similar amount from the KIA Air Bag Assembly costs to arrive at an estimated increase in cost for the additional air bag feature.

Delete Pro-Rated Cost for Aesthetic Panel	1.30	0.28	0.44				2.02					
Estimated Additional Cost for Air Bag Feature	12.39	1.52	2.50	0.18	0.27	2.40	19.26	6.93	2.88	29.07	889.9	2,215.0

Table 2-4

PASSENGER SEAT OCCUPANT SENSOR COMPARISON - TASK ORDER 001 vs. TASK ORDER 003

Description	Direct Mat'l	Direct Labor	Vari-able Burden	Tier Three Mar	Tier Two Mar	Tier One Mar	Vari-able Mfg. Cost	Mfg. Mar (36%x Var)	Dealer Mar (11%x (V+M))	End User Cost	Tooling Cost x1,000	Capital Eq. Cost x1,000
TASK ORDER 003 - BMW Z3 MY 2000 OCCUPANT SENSOR, PASSENGER SEAT												
Occupant Sensor Assy	1.58	0.84	0.72	0.00	0.00	0.42	3.56	1.28	0.53	5.37	8.0	620.0
TASK ODER 001 - BMW 528i MY 1998 OCCUPANT SENSOR, PASSENGER SEAT												
Occupant Sensor Assy	0.96	0.54	0.52	0.00	0.00	0.42	2.44	0.88	0.37	3.68	0.0	640.0

Table 2-5

Differences in cost reflect variances in design and cost inflation. These costs bracket the range that could be expected for various vehicles sold in the US at this period in time.

The cost comparisons, and major reasons for any differences, are discussed in the following paragraphs.

DRIVER AND PASSENGER AIR BAG SYSTEMS

The costs of the four systems, the Chrysler Cirrus, BMW 528i, Ford Taurus and the BMW Z3 are presented in Table 2-1 and Figures 2-1 and 2-2. The main difference in the systems is that the Cirrus and BMW 528i use single stage inflators and the Taurus and BMW Z3 use two stage hybrid inflators.

The driver air bag systems employ pyrotechnic devices using sodium azide for both the single stage and two stage inflators. These units require stainless steel filter screens to trap the particulate by-products of sodium azide combustion.

The BMW 528i and Chrysler Cirrus passenger side air bag systems employ pyrotechnic single stage inflators. The BMW Z3 and Ford Taurus 2000 passenger air bag utilize stored gas with pyrotechnic boosters for dual stage inflation. This is called a hybrid inflator. The sodium azide is more expensive than stored gas and also requires filters. Stored gas inflators require a more expensive container for the stored pressurized gas.

The average variable manufacturing cost of the two-stage pyrotechnic driver side air bag is approximately 20% higher than the average variable manufacturing cost of the single stage pyrotechnic driver side air bag system. The inflator designs utilize similar technology and materials. However, dual stage inflators require a container large enough for two distinct propellant charges versus one for the smaller single stage design. A similar comparison of the passenger side air bag systems, indicate that the costs for two stage systems are approximately 5% higher than the single stage systems. The latter difference reflects the offsetting costs of the sodium azide and filters in the single stage with the pressurized container for the hybrid two-stage system.

SEAT BELT SYSTEMS

The costs of three seat belt systems, Chrysler Cirrus, BMW 528i and the Ford Taurus are presented in Table 2-2 and Figures 2-1 and 2-2. The BMW 528i and Ford Taurus systems are similar in design in that both employ pretensioners. Therefore, costs have been developed separately for the belts and pretensioners in these two systems for comparative purposes. The Chrysler Cirrus does not include a pretensioner and is considered as one system.

3.0 - DISCUSSION - DESIGN DIFFERENCES; TASK ORDER 001 vs. TASK ORDER 003

This Section presents a discussion of the major differences in the selected occupant restraint systems and components that were evaluated in Task Orders 001 and 003. As discussed in the Introduction, these two Tasks were conducted to develop costs of selected systems; i. e., BMW 528i (MY 1998) Occupant Restraint System, Chrysler Cirrus/Doge Stratus (MY 1998) Occupant Restraint System, Ford Taurus (MY 2000) Frontal Air Bag Systems and Seat Belt/pretensioner System, BMW Z3 (MY 2000) Frontal Air Bag and Front Passenger Seat Occupant Sensor, Volvo (1999) Head Air Bag Assembly, and the KIA (1999) knee bolster Air Bag Assembly.

The BMW 528i and Chrysler Cirrus/Dodge Stratus units (Task 001) were complete front driver/passenger occupant restraint systems (see Figures 3-1 and 3-2). That is, for the vehicle involved, they included all of the components offered by the manufacturer for the safety of the front occupants. Specifically, the BMW 528i system included frontal, side door, and head air bags, seat belt/pretensioner assemblies, passive knee bolsters, a front passenger occupant detection sensor, front and side crash sensors, a battery safety terminal, and a control module with a diagnostic system. The BMW 528i system was the most comprehensive approach to occupant safety on the market at the time of the analysis. The Chrysler Cirrus/Dodge Stratus system included frontal air bags, the seat belt systems (without pretensioners), and passive knee bolsters, a front crash sensor, and a control module. The Chrysler Cirrus system represented the typical approach to occupant safety found in most vehicles at the time of the study.

Schematics of the BMW 528i and Chrysler system operation are presented in Appendix A along with brief descriptions of their hardware. This information was included in the previous Task 001 Final Report but is repeated here to provide a comparison of different levels of occupant protection and the associated cost and weight therein.

The Ford Taurus, BMW Z3, Volvo, and KIA components (Task 003) are partial systems and were evaluated to present the cost of upgrades in technology incorporated into production vehicles since the earlier Task (001). The analyses of these upgrades provide a cost for current design trends as well as cost comparisons of similar components with different capabilities (see Figures 3-3, 3-4, 3-5 and 3-6).

The following Sections discuss the major differences between these systems and their components.

3.1 - DRIVER AND PASSENGER AIR BAG SYSTEMS:

The basic difference between the Task Order 001 and Task Order 003 frontal air bag systems is

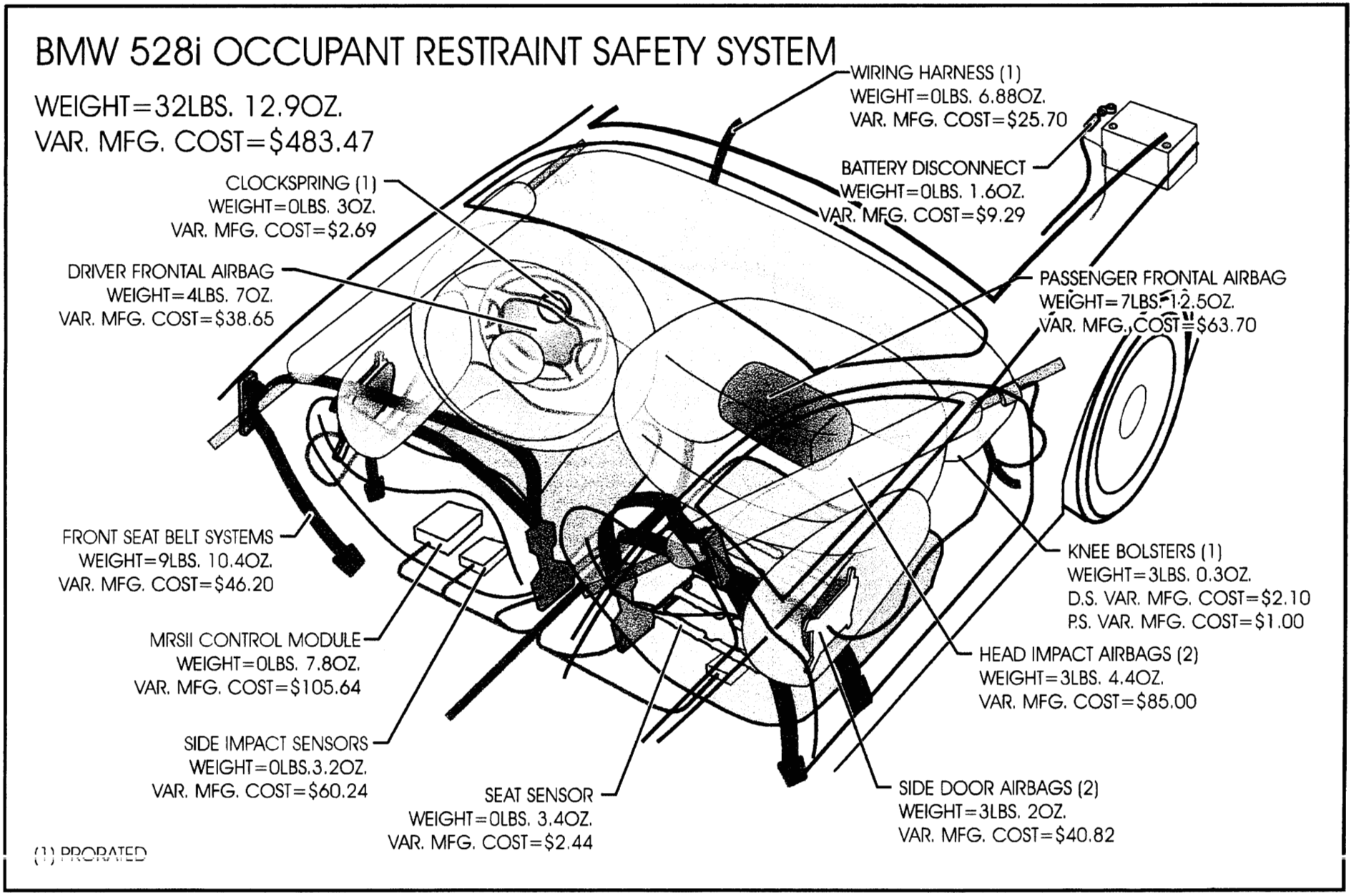
BMW 528i OCCUPANT RESTRAINT SAFETY SYSTEM
WEIGHT=32LBS. 12.9OZ.
VAR. MFG. COST=$483.47
WIRING HARNESS (1)
WEIGHT=0LBS. 6.88OZ.
VAR. MFG. COST=$25.70
BATTERY DISCONNECT
WEIGHT=0LBS. 1.6OZ.
VAR. MFG. COST=$9.29
CLOCKSPRING (1)
WEIGHT=0LBS. 3OZ.
VAR. MFG. COST=$2.69
DRIVER FRONTAL AIRBAG
WEIGHT=4LBS. 7OZ.
VAR. MFG. COST=$38.65
PASSENGER FRONTAL AIRBAG
WEIGHT=7LBS. 12.5OZ.
VAR. MFG. COST=$63.70
FRONT SEAT BELT SYSTEMS
WEIGHT=9LBS. 10.4OZ.
VAR. MFG. COST=$46.20
KNEE BOLSTERS (1)
WEIGHT=3LBS. 0.3OZ.
D.S. VAR. MFG. COST=$2.10
P.S. VAR. MFG. COST=$1.00
MRSII CONTROL MODULE
WEIGHT=0LBS. 7.8OZ.
VAR. MFG. COST=$105.64
HEAD IMPACT AIRBAGS (2)
WEIGHT=3LBS. 4.4OZ.
VAR. MFG. COST=$85.00
SIDE IMPACT SENSORS
WEIGHT=0LBS.3.2OZ.
VAR. MFG. COST=$60.24
SEAT SENSOR
WEIGHT=0LBS. 3.4OZ.
VAR. MFG. COST=$2.44
SIDE DOOR AIRBAGS (2)
WEIGHT=3LBS. 2OZ.
VAR. MFG. COST=$40.82
(1) PRORATED

Figure 3-1

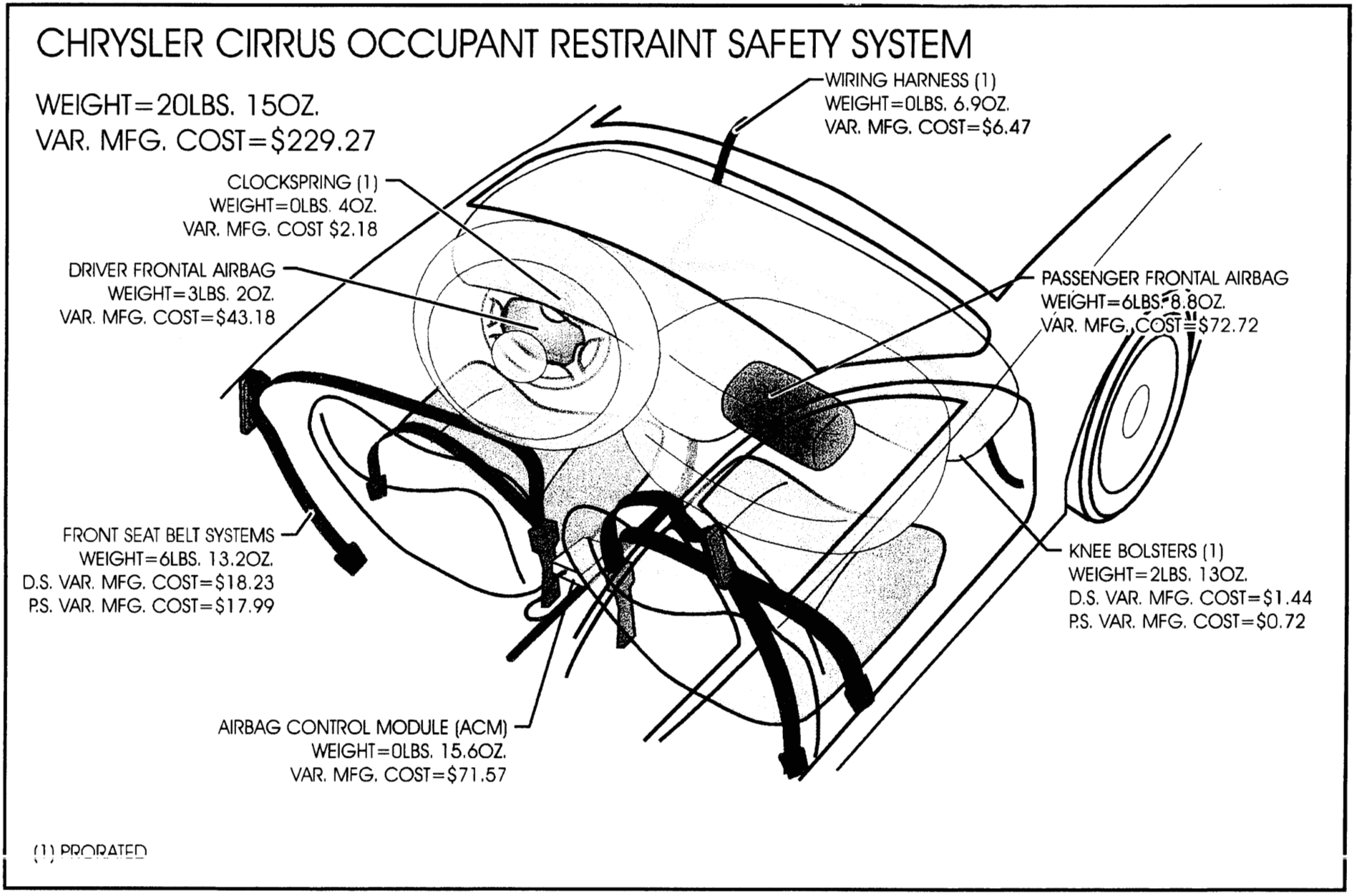
CHRYSLER CIRRUS OCCUPANT RESTRAINT SAFETY SYSTEM
WEIGHT=20LBS. 15OZ.
VAR. MFG. COST=$229.27
WIRING HARNESS (1)
WEIGHT=0LBS. 6.9OZ.
VAR. MFG. COST=$6.47
CLOCKSPRING (1)
WEIGHT=0LBS. 4OZ.
VAR. MFG. COST $2.18
DRIVER FRONTAL AIRBAG
WEIGHT=3LBS. 2OZ.
VAR. MFG. COST=$43.18
PASSENGER FRONTAL AIRBAG
WEIGHT=6LBS. 8.8OZ.
VAR. MFG. COST=$72.72
FRONT SEAT BELT SYSTEMS
WEIGHT=6LBS. 13.2OZ.
D.S. VAR. MFG. COST=$18.23
P.S. VAR. MFG. COST=$17.99
KNEE BOLSTERS (1)
WEIGHT=2LBS. 13OZ.
D.S. VAR. MFG. COST=$1.44
P.S. VAR. MFG. COST=$0.72
AIRBAG CONTROL MODULE (ACM)
WEIGHT=0LBS. 15.6OZ.
VAR. MFG. COST=$71.57
(1) PRORATED

Figure 3-2

Ford Taurus MY 2000 Occupant Restraint System

Weight: 24.48 lbs.
Var. Mfg. Cost: $246.55

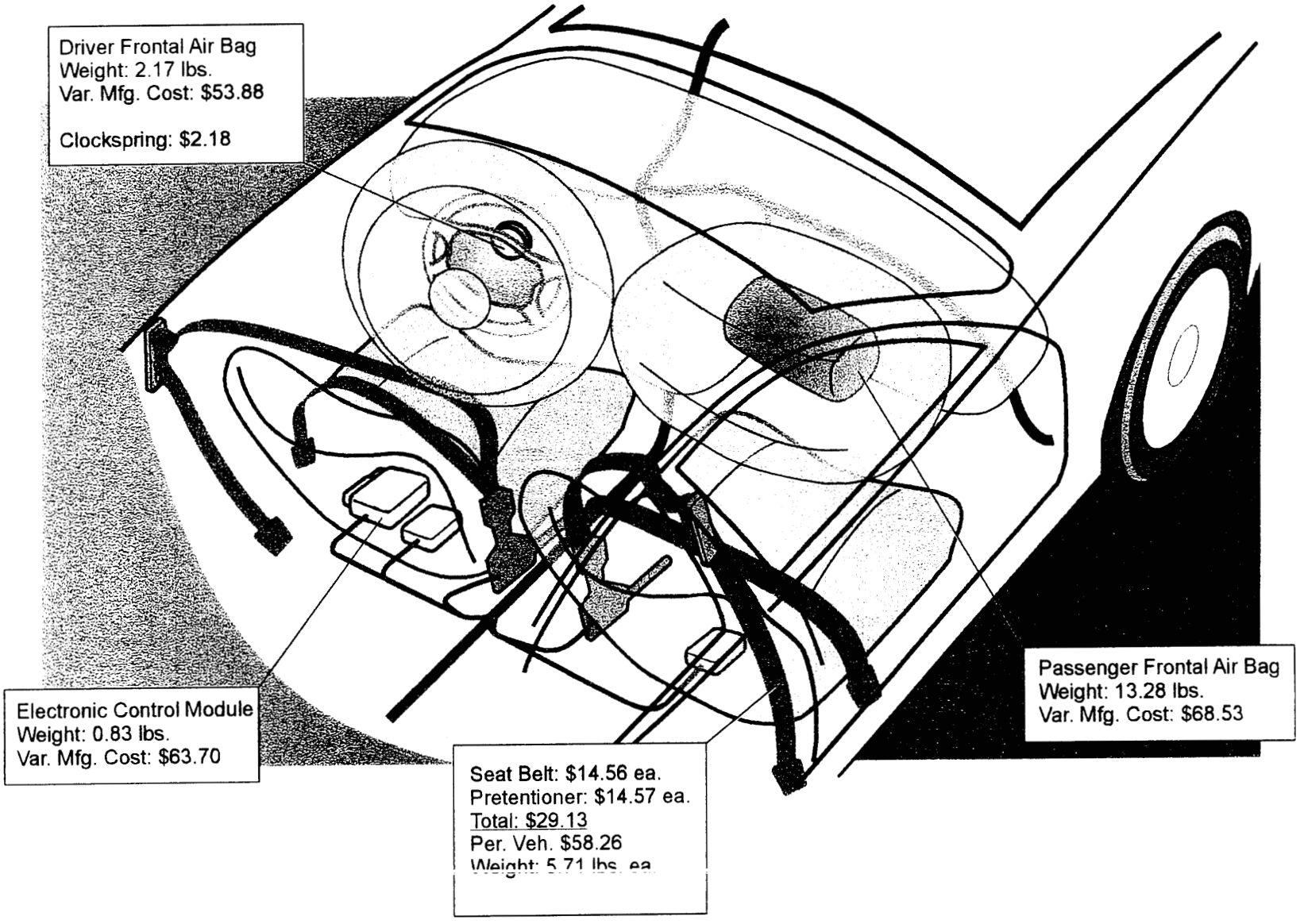

Figure 3-3

BMW Z3 MY 2000 Occupant Restraint System

Weight: 12.40 lbs.
Var. Mfg. Cost: $239.41

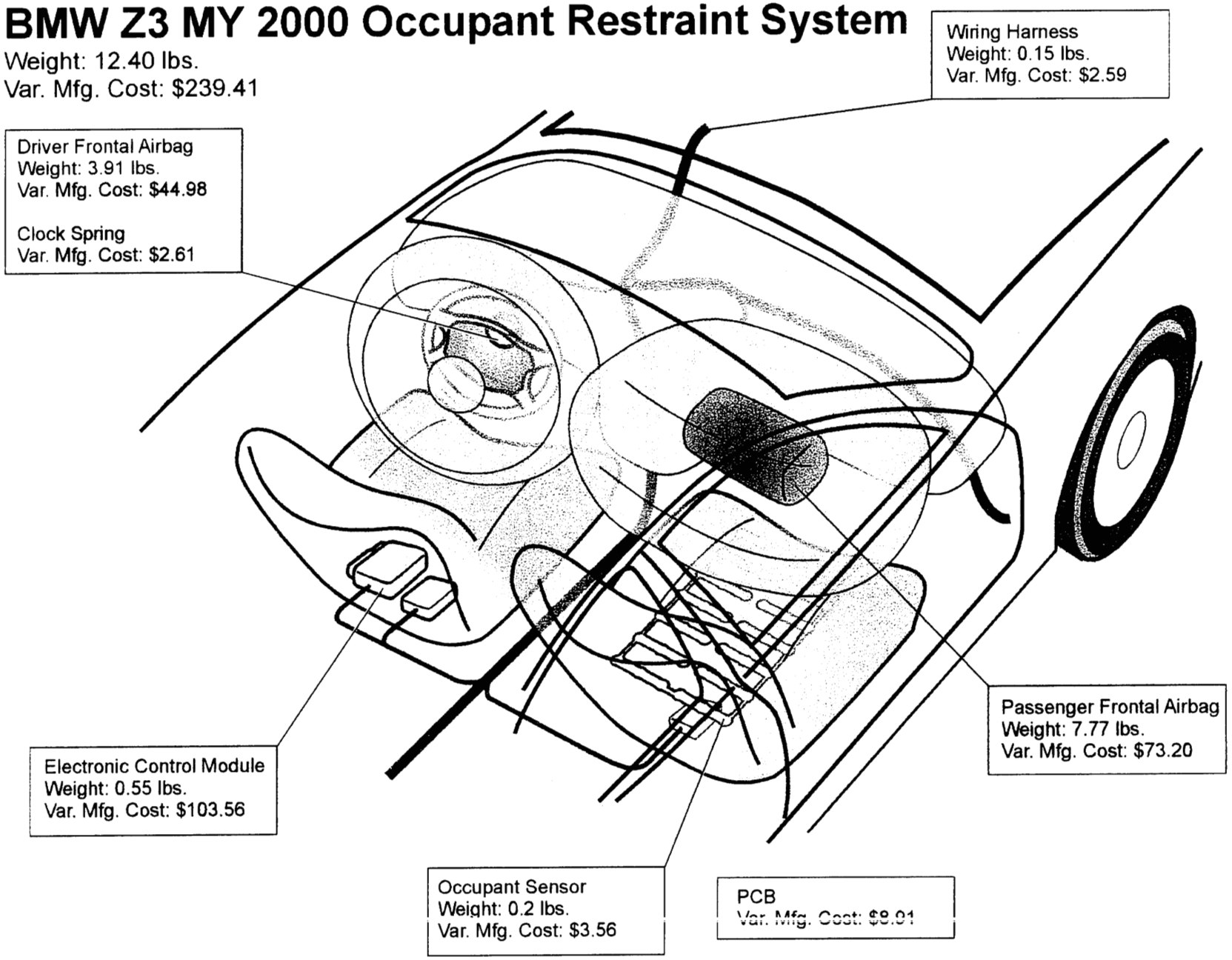

Figure 3-4

Volvo MY 2000 Side Head Air Bag System

Weight: 2.10 lbs.
Var. Mfg. Cost: $39.10

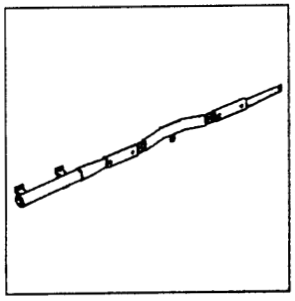

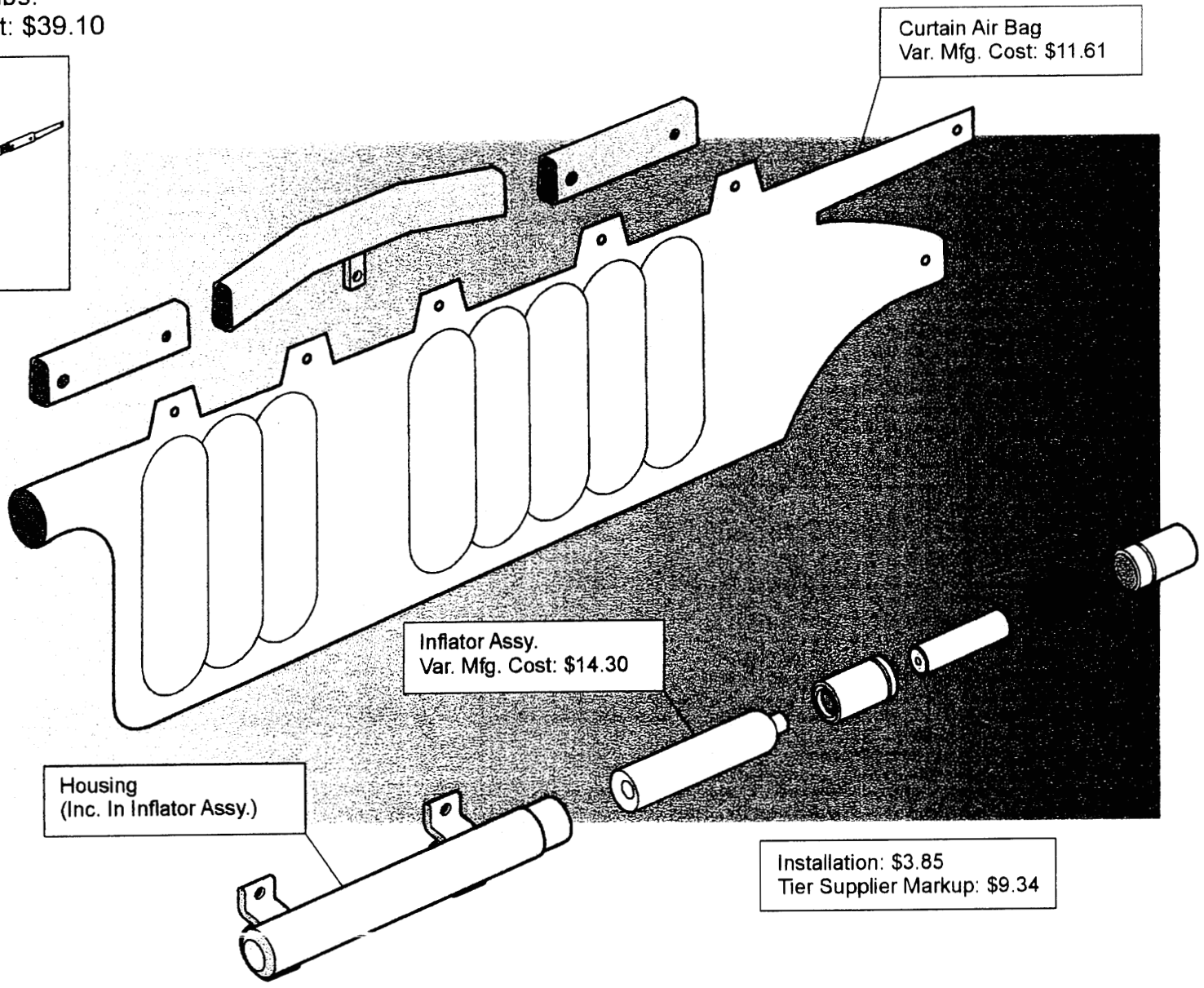

Figure 3-5

KIA MY 2000 Knee Bolster Air Bag System

Weight: 3.21 lbs.
Var. Mfg. Cost: $21.62

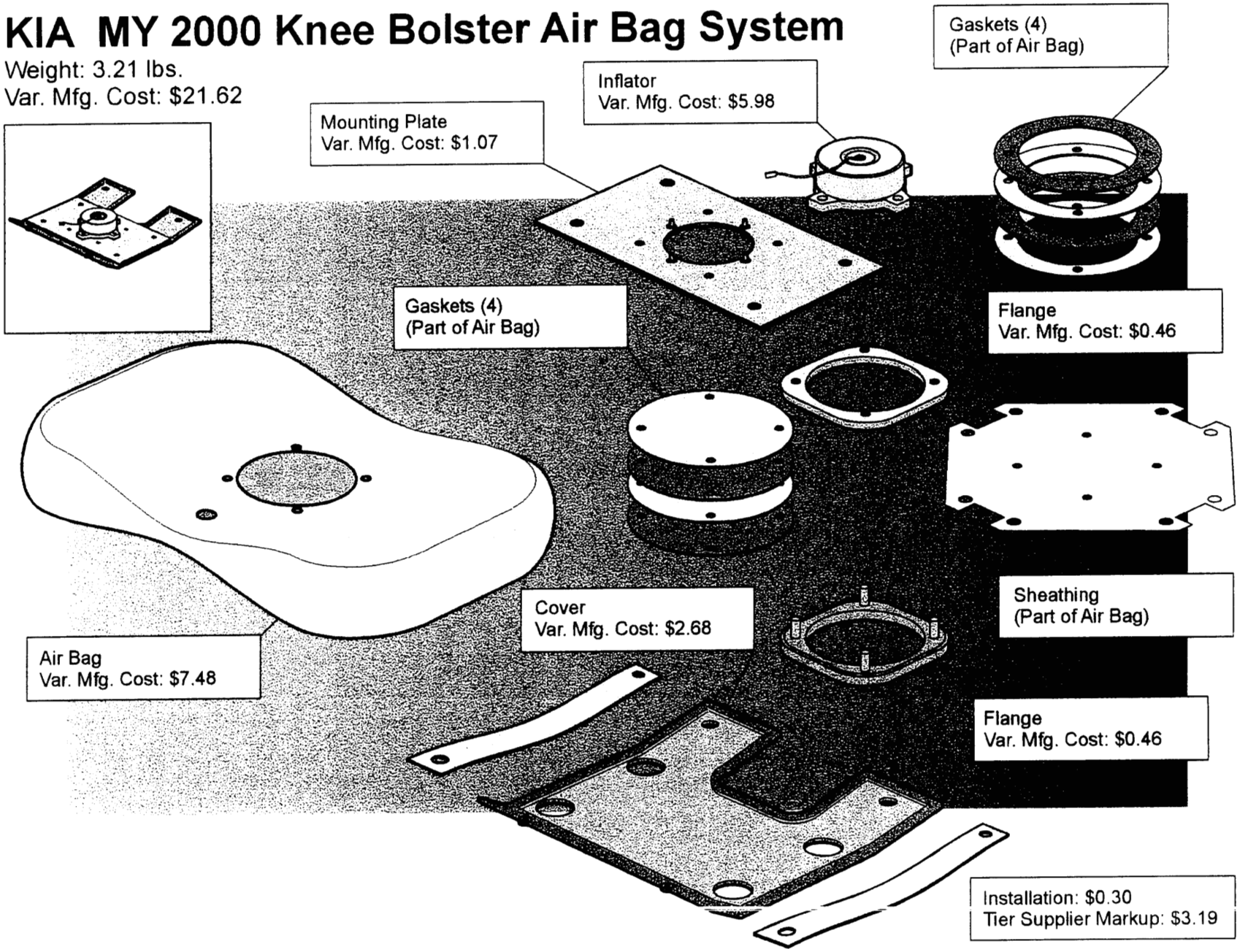

Figure 3-6

the changeover from single to dual stage inflators for both the driver and passenger positions. The BMW 528i and the Chrysler Cirrus frontal air bag systems utilized single stage inflators while the BMW Z3 and the Ford Taurus utilized dual stage inflators. The dual stage inflators were incorporated to provide the ability to vary the air bag inflation pressure depending upon the severity of the crash and, also, the size of the passenger (as determined by weight).

Protecting various size occupants throughout a wide range of crash scenarios is a complex problem. Utilization of dual stage inflators is only one step toward employment of an ideal system that protects all people in any severity of crash.

The costs of the four different driver and passenger air bag systems, the Chrysler Cirrus, BMW 528i, Ford Taurus and the BMW Z3, are presented in Table 3-1 and Figures 3-7, 3-8, 3-9, 3-10, 3-11, 3-12, 3-13, and 3-14. The main difference in the systems, as stated above, is that the Cirrus and BMW 528i use single stage pyrotechnic inflators for both driver and passenger air bags whereas the Taurus and BMW Z3 use dual stage pyrotechnic inflators for the driver bag and dual stage hybrid inflators for the passenger bag.

Pyrotechnic inflators require stainless steel filter screens that trap residues from the burning solid material before the gases inflate the air bags. Dual staging is accomplished by igniting one or both sodium azide propellant charges depending upon the crash scenario. The cost difference between the single stage and the dual stage air bag systems is in the use of one versus two sodium azide propellant charges, additional wiring, and other associated electronic components.

The driver air bag dual stage inflator presents a different outer surface envelope than that of its single stage counterpart. In both cases, the inflator is packaged inside the steering wheel hub. A redesign of the steering wheel to accommodate the larger dual stage inflator envelope is required. However, accommodation of the dual stage inflator means only a reshaping of the wheel, not an increase in material or change in the basic design. Manufacturing processes of the steering wheel remain the same. Therefore, there is no additional cost in this area. There is no change in the basic air bag design; only a reshaping of the interface with the inflator/bag interface. Consequently, any difference in the air bag cost from a single to dual stage inflation system is not significant. The cover remains relatively the same in both cases. Any change in costs would result from a change in styling.

The average variable manufacturing cost of the dual stage pyrotechnic driver side air bag is approximately 20% higher than a single stage pyrotechnic driver system when utilizing similar materials and design concepts.

The BMW 528i and Chrysler Cirrus passenger side air bag systems employ single stage pyrotechnic inflators. The BMW Z3 and Ford Taurus 2000 passenger air bag systems utilize hybrid dual stage inflators consisting of a stored-gas container with two pyrotechnic initiators and two boosters for deployment. This is called a hybrid inflator. The stored gas consists of

DRIVER AND PASSENGER AIR BAG ASSY COST ($) COMPARISON - TASK ORDER 001 vs TASK ORDER 003 (TWO STAGE VS SINGLE STAGE INFLATORS)

Description	Direct Mat'l	Direct Labor	Vari-able Burd-en	Tier Three Mar	Tier Two Mar	Tier One Mar	Vari-able Mfg. Cost	Mfg. Mar (36%x Var)	Dealer Mar (11%x (V+M))	End User Cost	Tooling Cost x1,000	Capital Eq. Cost x1,000
TASK ORDER 003 - AIR BAG SYSTEMS WITH TWO STAGE INFLATORS (PASSENGER A/B INFLATORS ARE PRESSURIZED GAS VESSELS WITH TWO INITIATORS; DRIVER A/B INFLATORS CONTAIN TWO SOLID PROPELLANT COMPARTMENTS WITH AN IGNITER IN EACH OMPARTMENT)												
Ford Taurus, MY 2000, Driver*	22.85	4.78	8.24	0.17	7.09	12.93	56.06	20.18	7.62	83.87	938.3	4,562.0
Ford Taurus, MY 2000, Pass	34.74	4.90	7.08	0.22	10.66	10.93	68.53	24.67	9.32	102.52	1,342.0	6,948.4
BMW Z3, MY 2000, Driver*	29.24	3.68	5.28	0.62	3.96	4.81	47.59	17.13	6.47	71.19	1,055.3	4,607.0
BMW Z3, MY 2000, Pass	43.56	3.27	6.20	3.55	5.19	11.43	73.20	26.35	9.96	109.51	1,304.0	5,781.7
TASK ORDER 001 - AIR BAG SYSTEMS WITH SINGLE STAGE SOLID PROPELLANT INFLATORS												
BMW 528i, MY 1998, Driver*	22.01	3.47	5.46	0.69	4.47	5.24	41.34	14.88	5.62	61.84	1,080.8	2,311.0
BMW 528i, MY 1998, Pass	35.37	4.00	7.49	2.92	4.27	9.65	63.70	22.93	8.66	95.30	1,266.0	4,439.0
Chrysler Cirrus, MY 1998, Driver*	22.15	3.05	4.32	0.13	5.56	10.15	45.36	16.33	6.17	67.86	1,115.0	2,627.0
Chrysler Cirrus, MY 1998, Pass	39.93	4.54	9.51	0.19	9.16	9.39	72.72	26.18	9.89	108.79	1,309.0	4,219.0

* Includes Clock Spring Assy

Table 3-1

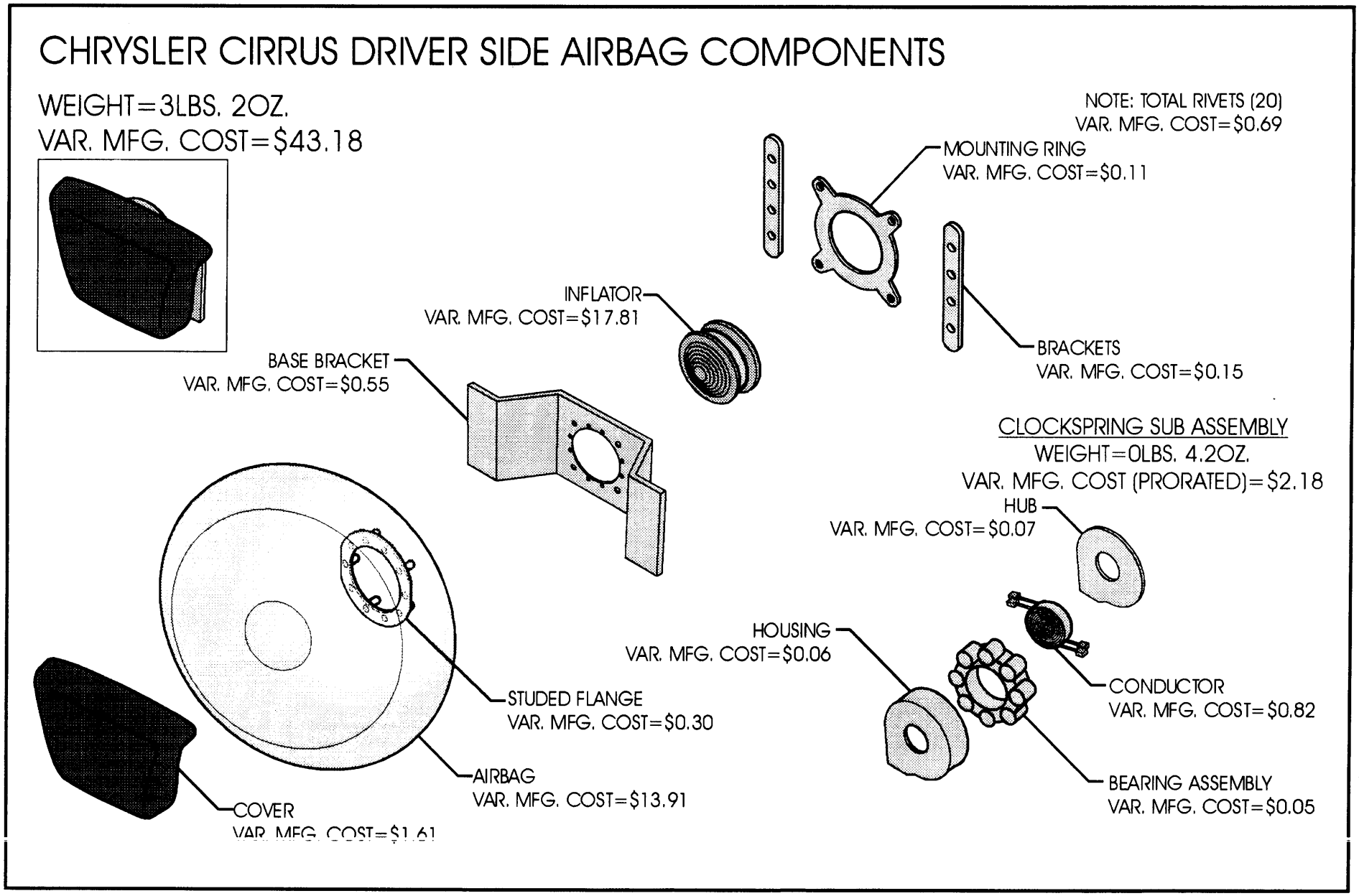
CHRYSLER CIRRUS DRIVER SIDE AIRBAG COMPONENTS
WEIGHT=3LBS. 2OZ.
VAR. MFG. COST=$43.18
NOTE: TOTAL RIVETS (20)
VAR. MFG. COST=$0.69
MOUNTING RING
VAR. MFG. COST=$0.11
INFLATOR
VAR. MFG. COST=$17.81
BRACKETS
VAR. MFG. COST=$0.15
BASE BRACKET
VAR. MFG. COST=$0.55
CLOCKSPRING SUB ASSEMBLY
WEIGHT=0LBS. 4.2OZ.
VAR. MFG. COST (PRORATED)=$2.18
HUB
VAR. MFG. COST=$0.07
HOUSING
VAR. MFG. COST=$0.06
CONDUCTOR
VAR. MFG. COST=$0.82
STUDED FLANGE
VAR. MFG. COST=$0.30
AIRBAG
VAR. MFG. COST=$13.91
BEARING ASSEMBLY
VAR. MFG. COST=$0.05
COVER
VAR. MFG. COST=$1.61

Figure 3-7

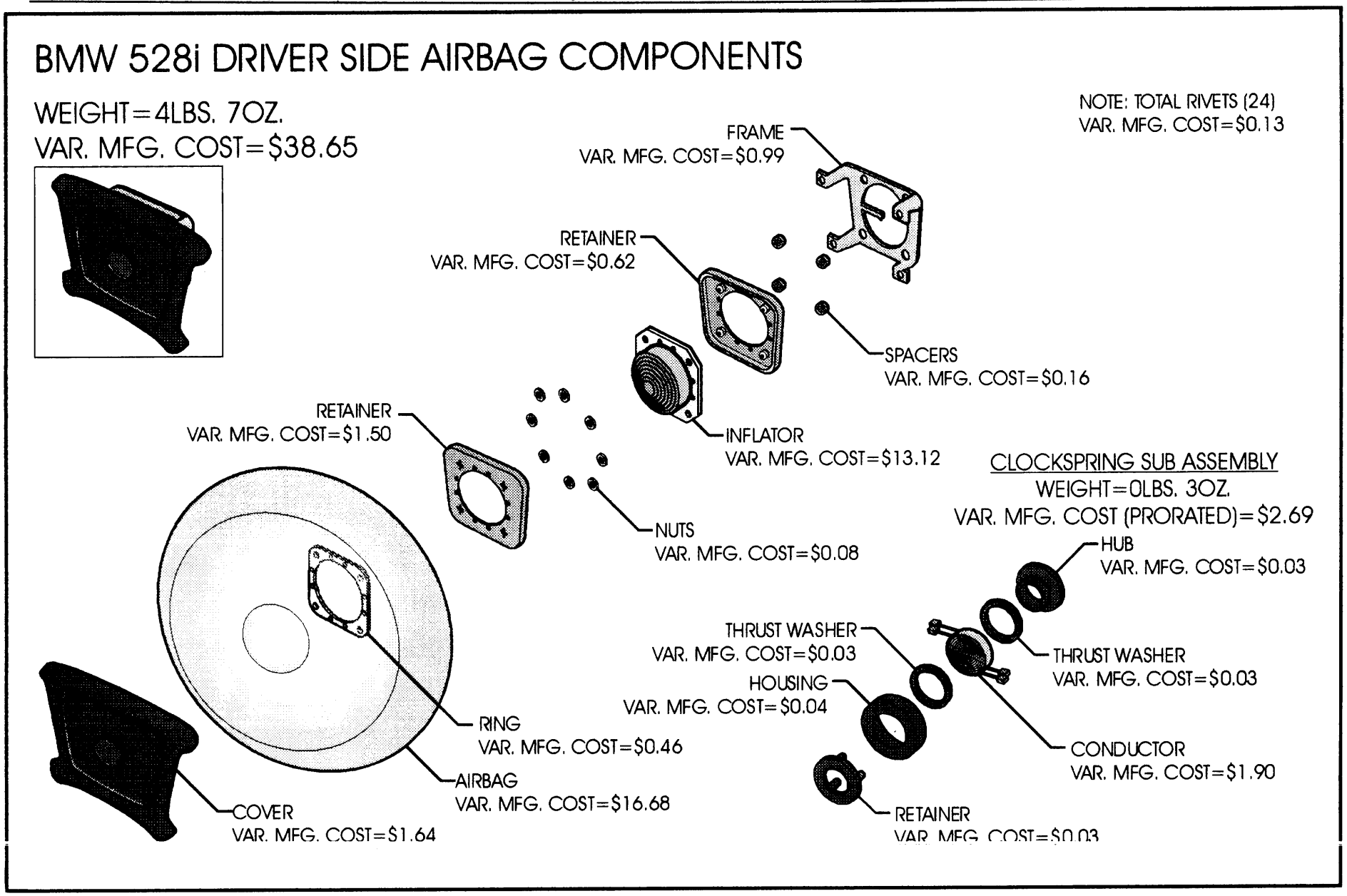
BMW 528i DRIVER SIDE AIRBAG COMPONENTS
WEIGHT=4LBS. 7OZ.
VAR. MFG. COST=$38.65
NOTE: TOTAL RIVETS (24)
VAR. MFG. COST=$0.13
FRAME
VAR. MFG. COST=$0.99
RETAINER
VAR. MFG. COST=$0.62
SPACERS
VAR. MFG. COST=$0.16
INFLATOR
VAR. MFG. COST=$13.12
RETAINER
VAR. MFG. COST=$1.50
NUTS
VAR. MFG. COST=$0.08
CLOCKSPRING SUB ASSEMBLY
WEIGHT=0LBS. 3OZ.
VAR. MFG. COST (PRORATED)=$2.69
HUB
VAR. MFG. COST=$0.03
THRUST WASHER
VAR. MFG. COST=$0.03
THRUST WASHER
VAR. MFG. COST=$0.03
HOUSING
VAR. MFG. COST=$0.04
RING
VAR. MFG. COST=$0.46
CONDUCTOR
VAR. MFG. COST=$1.90
AIRBAG
VAR. MFG. COST=$16.68
COVER
VAR. MFG. COST=$1.64
RETAINER

Figure 3-8

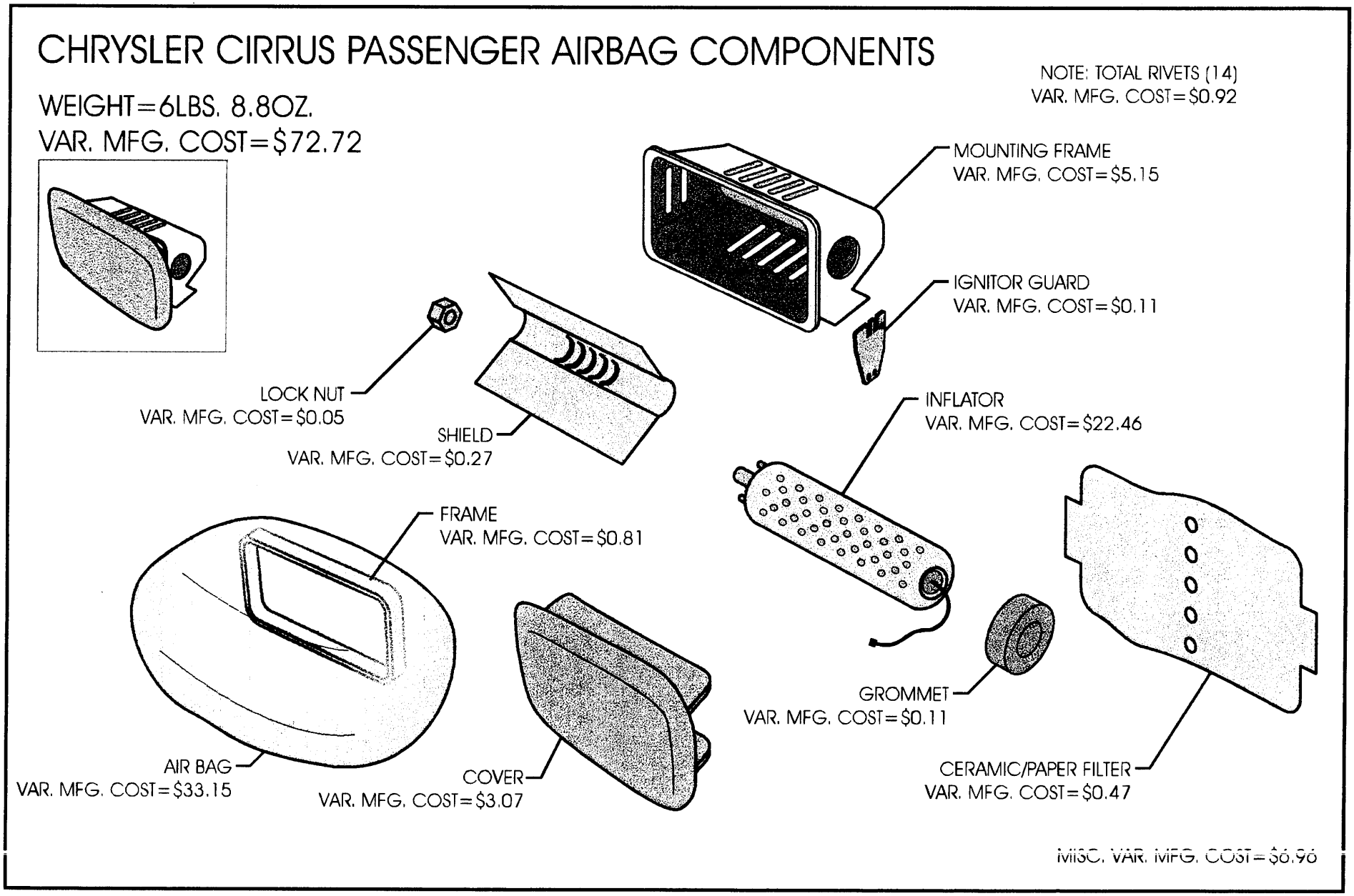
CHRYSLER CIRRUS PASSENGER AIRBAG COMPONENTS
WEIGHT=6LBS. 8.8OZ.
VAR. MFG. COST=$72.72
NOTE: TOTAL RIVETS (14)
VAR. MFG. COST=$0.92
MOUNTING FRAME
VAR. MFG. COST=$5.15
IGNITOR GUARD
VAR. MFG. COST=$0.11
LOCK NUT
VAR. MFG. COST=$0.05
SHIELD
VAR. MFG. COST=$0.27
INFLATOR
VAR. MFG. COST=$22.46
FRAME
VAR. MFG. COST=$0.81
GROMMET
VAR. MFG. COST=$0.11
AIR BAG
VAR. MFG. COST=$33.15
COVER
VAR. MFG. COST=$3.07
CERAMIC/PAPER FILTER
VAR. MFG. COST=$0.47
MISC. VAR. MFG. COST=$6.96

Figure 3-9

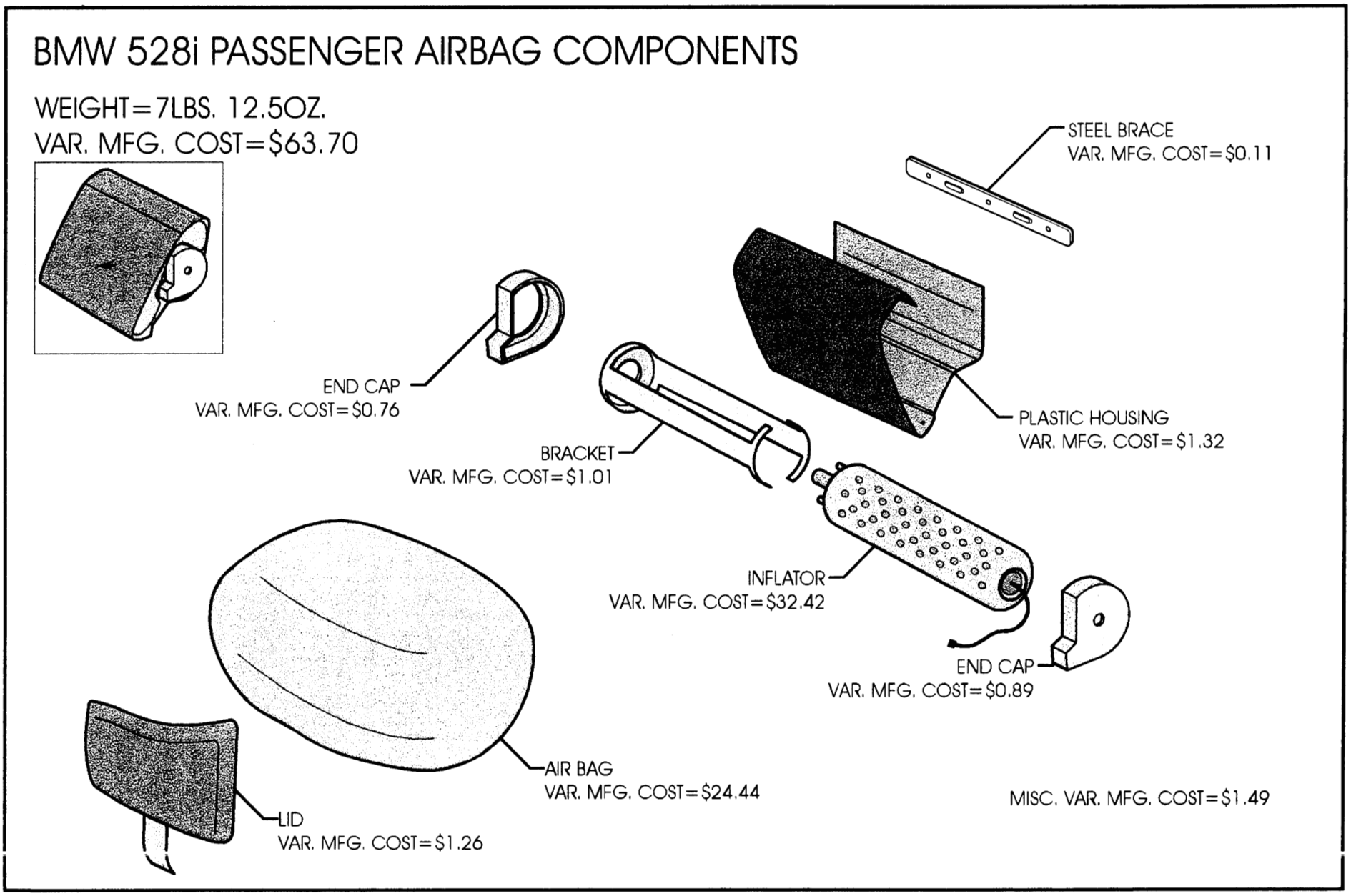
BMW 528i PASSENGER AIRBAG COMPONENTS
WEIGHT=7LBS. 12.5OZ.
VAR. MFG. COST=$63.70
STEEL BRACE
VAR. MFG. COST=$0.11
END CAP
VAR. MFG. COST=$0.76
PLASTIC HOUSING
VAR. MFG. COST=$1.32
BRACKET
VAR. MFG. COST=$1.01
INFLATOR
VAR. MFG. COST=$32.42
END CAP
VAR. MFG. COST=$0.89
AIR BAG
VAR. MFG. COST=$24.44
LID
VAR. MFG. COST=$1.26
MISC. VAR. MFG. COST=$1.49

Figure 3-10

Ford Taurus MY 2000 Driver Air Bag System

Weight: 2.17 lbs.
Var. Mfg. Cost: $56.06 (incl. clock spring)

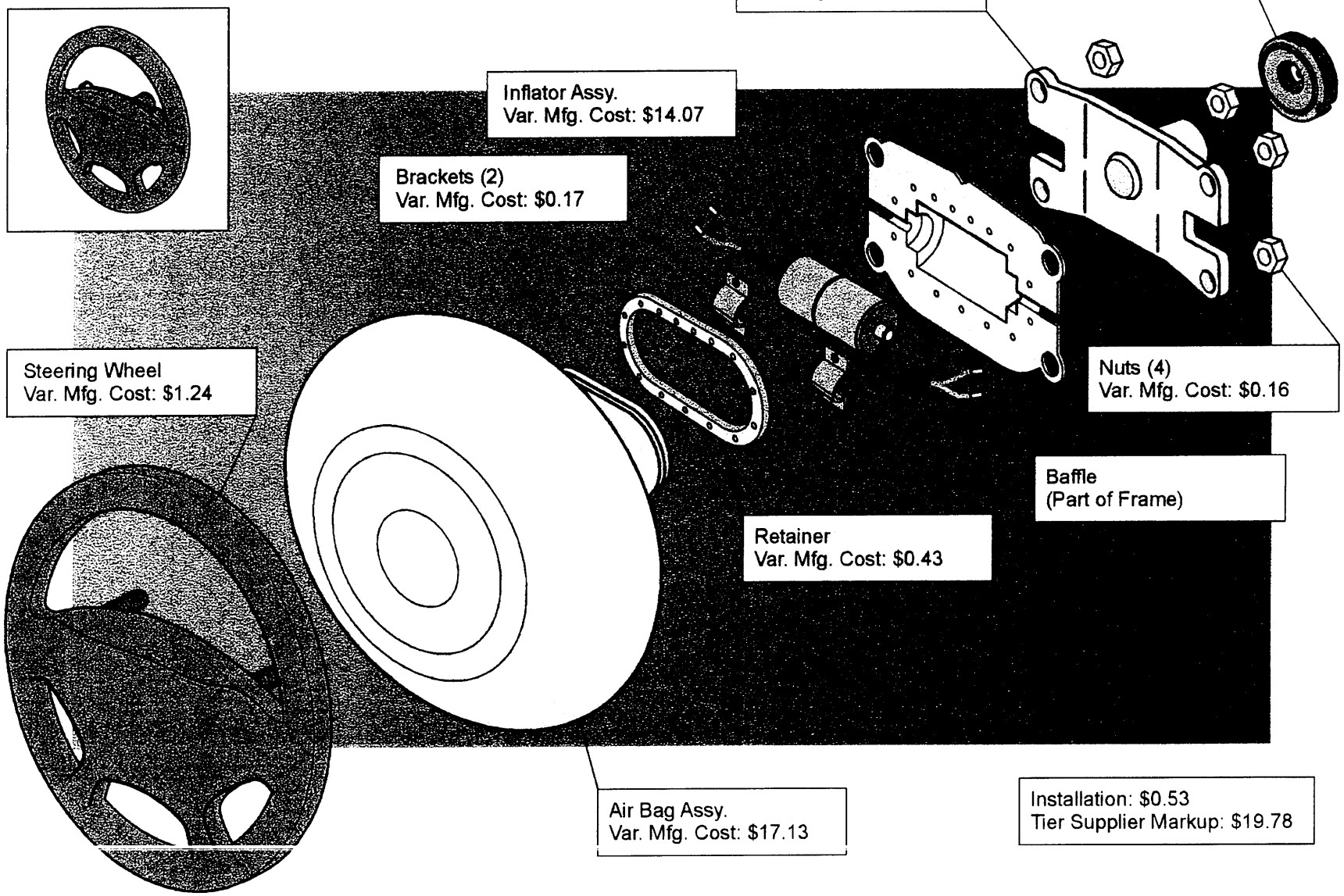

Figure 3-11

Ford Taurus MY 2000 Passenger Air Bag System

Weight: 13.28 lbs.
Var. Mfg. Cost: $68.53

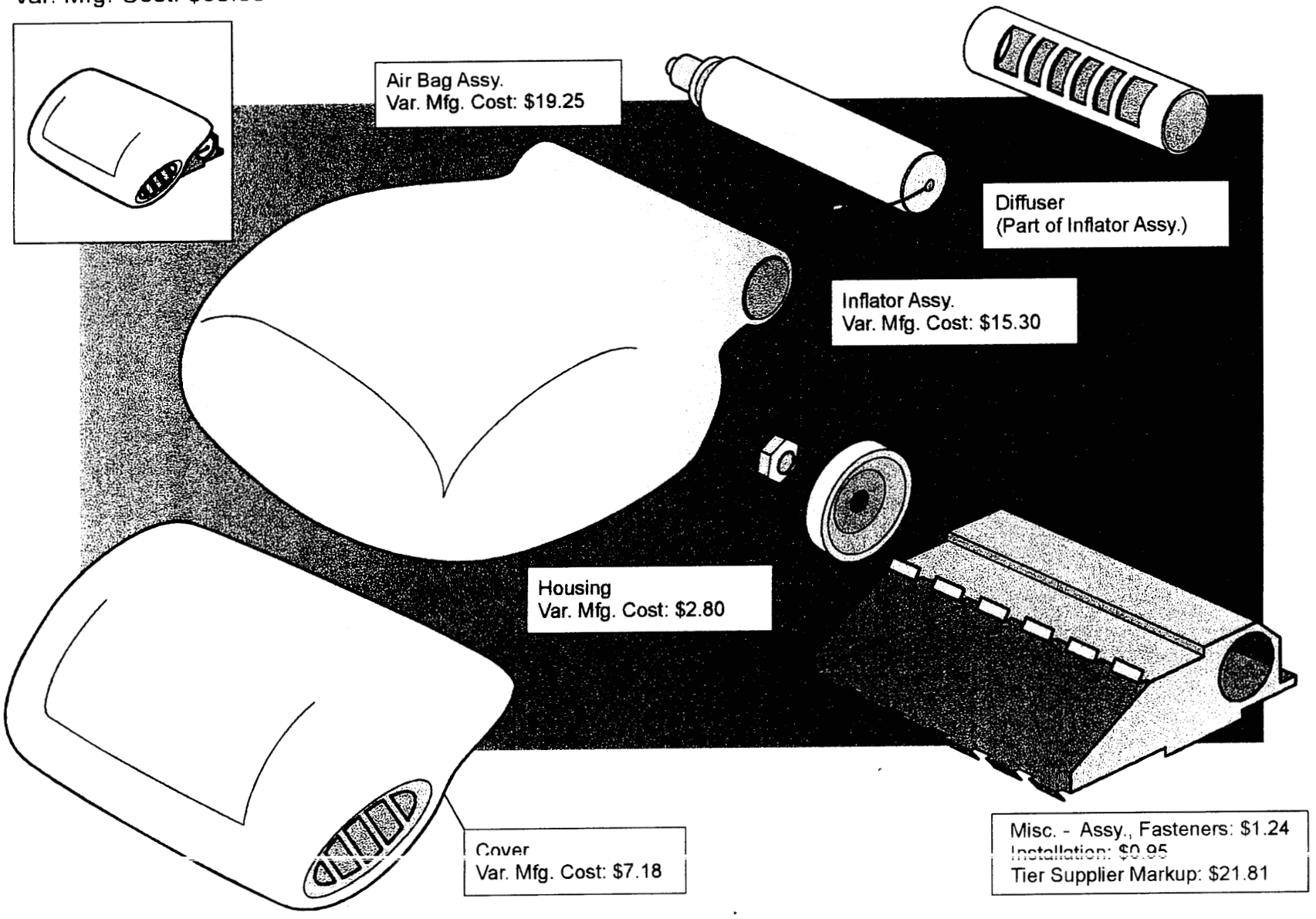

Figure 3-12

BMW Z3 MY 2000 Driver Air Bag System

Weight: 3.91 lbs.
Var. Mfg. Cost: $47.59 (incl. Clock Spring)

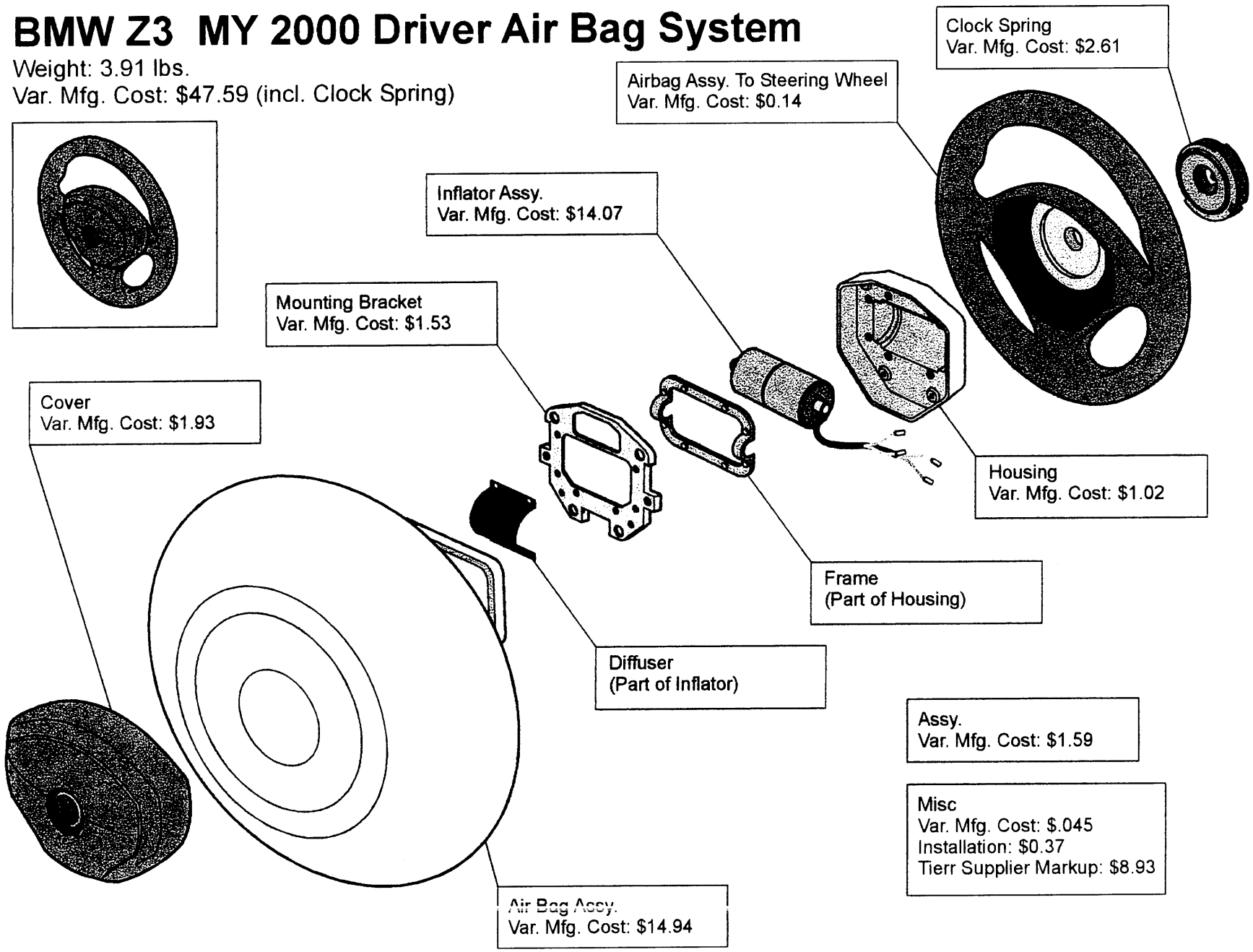

Figure 3-13

BMW Z3 MY 2000 Passenger Air Bag System

Weight: 7.77 lbs.
Var. Mfg. Cost: $73.20

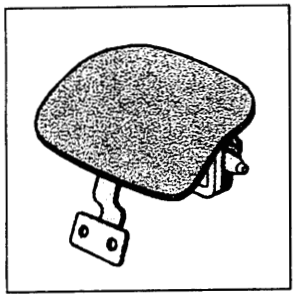

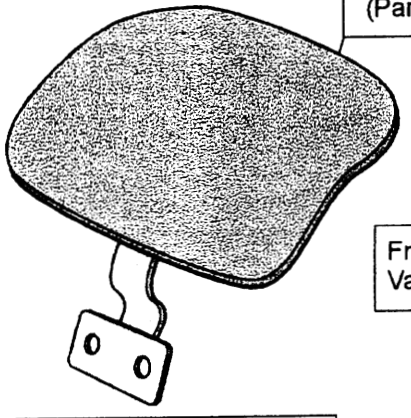

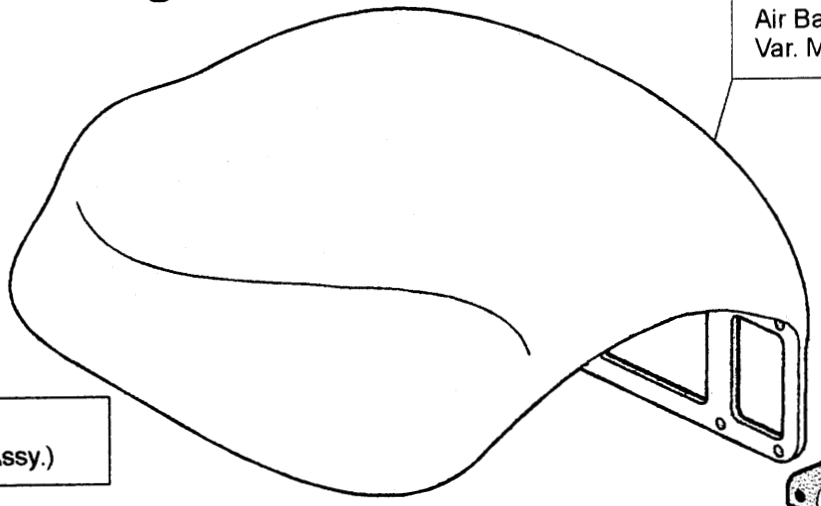

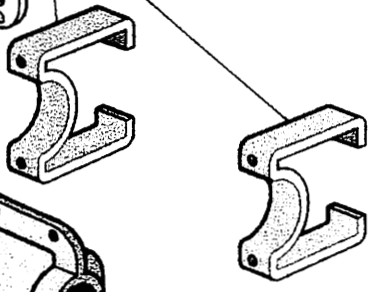

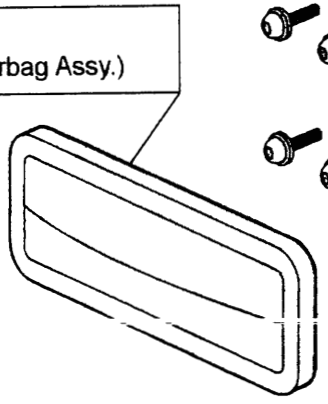

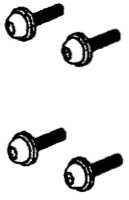

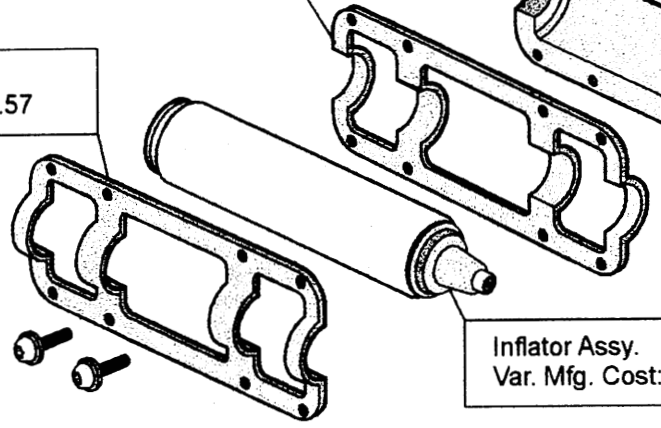

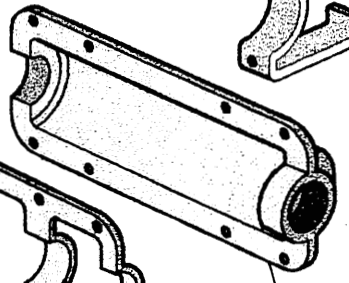

Air Bag Assy.
Var. Mfg. Cost: $18.59

Brackets (2)
Var. Mfg. Cost: $1.15

Lid
(Part of Airbag Assy.)

Frame
Var. Mfg. Cost: $0.57

Frame
Var. Mfg. Cost: $0.57

Housing
Var. Mfg. Cost: $0.94

Cover
(Part of Airbag Assy.)

Inflator Assy.
Var. Mfg. Cost: $29.15

Tier Supplier Markup: $20.17

Bolts (8)
Var. Mfg. Cost: $0.32

Assy.
Var. Mfg. Cost: $1.38

Figure 3-14

Argon, Oxygen, and Helium pressurized to a relatively high level. Consequently, the hybrid requires a stronger, and more expensive, container than that needed for the pyrotechnic inflator.

There are two offsetting costs in these air bag inflator systems. The all-pyrotechnic inflators require relatively expensive, and heavy, stainless steel filters to remove the particulate by-products of sodium azide combustion. Stored gas inflators require a more expensive container for the pressurized gas than that required for the sodium azide material. These different design features are result in offsetting costs between the two types of inflators.

The passenger side air bag support housing and brackets are different because of the different inflator exterior envelopes. There isn't any significant difference in costs in this area mainly because it is a reshaping of materials to accommodate the different inflator envelopes. One system is not significantly larger than the other. There are also some other differences due to packaging within the instrument panel mounting support structure. The air bag design is basically the same except for the interface with the inflator, and its cost is not significantly changed. The cover also remains the same in design and cost except for easthetic considerations.

A comparison of the passenger side air bag systems, indicates that the two stage systems are approximately 5% higher in costs than the single stage systems. This difference primarily reflects the offsetting of the sodium azide and filter screen in the single stage inflator with the pressurized container and dual boosters of the hybrid system.

3.2 - SEAT BELT SYSTEMS

The costs of BMW 528i, Ford Taurus, and Chrysler Cirrus seat belt systems are listed in Table 3-2 and in Figures 3-15, 3-16 and 3-17. The BMW 528i and Ford Taurus systems are similar in design in that both employ pretensioners. Therefore, costs have been developed separately for the belts and pretensioners in these two systems for comparative purposes. The Chrysler Cirrus does not include a pretensioner and the two assemblies (belt assembly and lower latch assembly) are considered as one system.

Although the BMW 528i and Ford Taurus seat belt systems are similar in design concept, there are some variations between the two. For example, the Taurus seat belt system contains 50 discrete components while the BMW contains approximately 38 discrete components. There is also a difference in the webbing design. The BMW belt webbing is of a simple one-piece design whereas the Taurus utilizes a two-piece swaged webbing design that requires an additional assembly operation. This accounts for the difference in costs.

The BMW 528i and Ford Taurus pretensioners are also similar in design. There are some

SEAT BELT & PRETENSIONER ASSY COMPARISON - TASK ORDER 001 vs. TASK ORDER 003

Description	Direct Mat'l	Direct Labor	Vari-able Burden	Tier Three Mar	Tier Two	Tier One Mar	Vari-able Mfg. Cost	Mfg. Mar (36%x Var)	Dealer Mar (11%x (V+M))	End User Cost	Tooling Cost x1,000	Capital Eq. Cost x1,000
TASK ORDER 003 - FORD MY2000 FORD TAURUS - SEAT BELT & PRETENSIONER SYSTEM												
D/S or P/S Seat Belt Assy - Total Incl. Tier Sup Markup	6.16	3.47	3.68	0.00	0.19	1.06	14.56	5.24	2.18	21.98	1,833.0	1,558.0
D/S or P/S Pretentioner Assy Total Incl. Tier Sup Markup	3.39	4.62	5.20	0.01	0.37	0.98	14.57	5.25	2.18	21.99	414.3	423.8
TASK ODER 001 - BMW 528i MY 1998 SEAT BELT & PRETENSIONER SYSTEMS												
D/S or P/S Seat Belt Assy - Total Incl. Tier Sup Markup	4.93	2.33	2.38	0.00	0.42	2.14	12.20	4.39	1.83	18.42	406.0	104.0
D/S or P/S Pretentioner Assy Total Incl. Tier Sup Markup	3.70	1.78	3.16	0.02	0.61	1.63	10.90	3.92	1.63	16.45	419.3(1)	748.8(1)
TASK ORDER 001 - CHRYSLER CIRRUS MY 1998 SEAT BELT ASSEMBLY												
Frt Driv. Seat Belt Assy - Total Incl. Tier Sup. Markup	6.61	4.14	4.44	0.16	0.30	2.58	18.23	6.56	2.73	27.52	624.5	318.0
Frt. Pass Seat Belt Assy - Total Incl. Tier Sup Markup	6.36	4.20	4.47	0.16	0.22	2.58	17.99	6.48	2.69	27.16	82.5	59.0

(1) Note: Tooling & Equipment shared by both Driver and Passenger Systems

Table 3-2

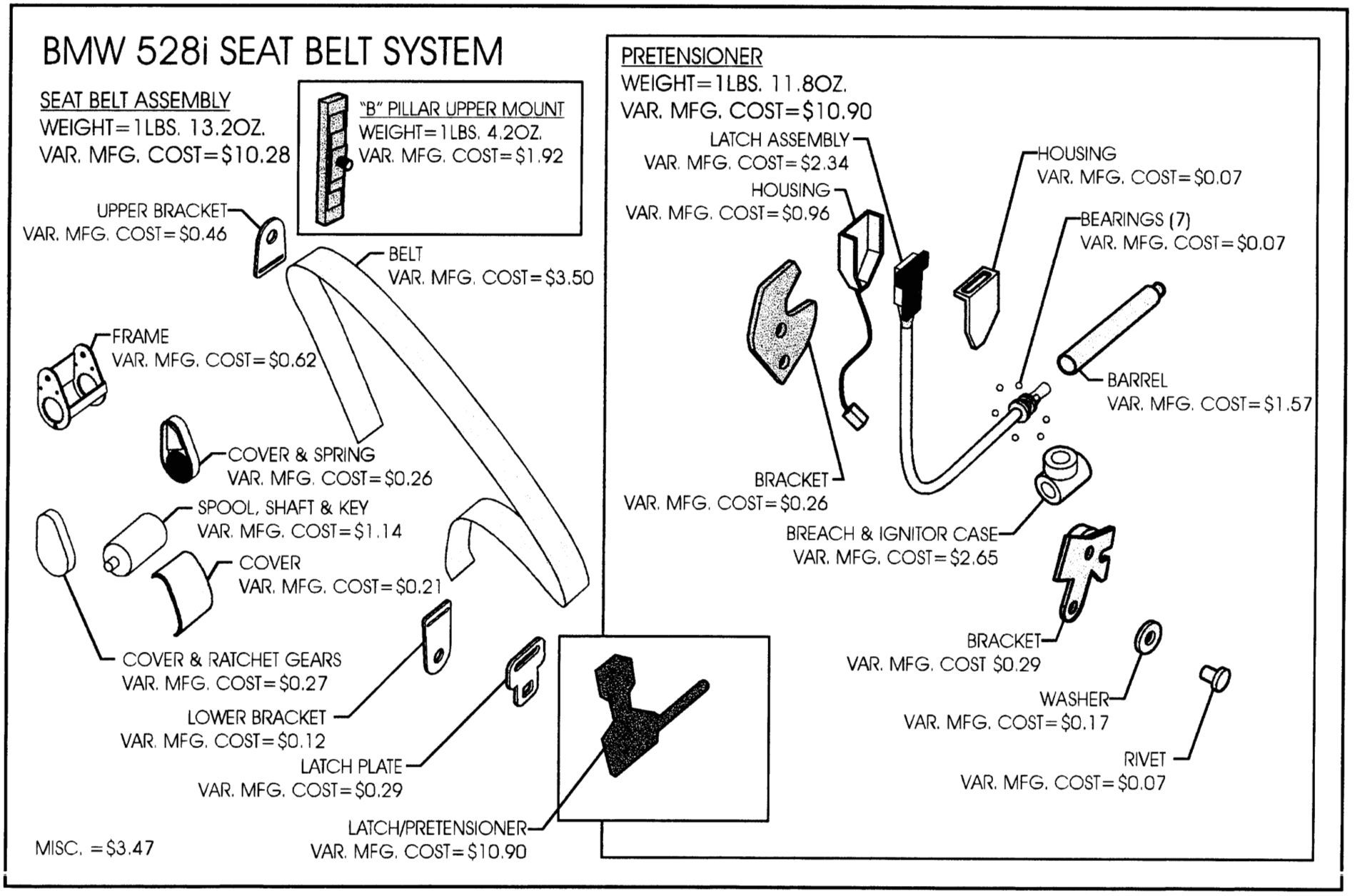
BMW 528i SEAT BELT SYSTEM
SEAT BELT ASSEMBLY
WEIGHT=1LBS. 13.2OZ.
VAR. MFG. COST=$10.28
"B" PILLAR UPPER MOUNT
WEIGHT=1LBS. 4.2OZ.
VAR. MFG. COST=$1.92
UPPER BRACKET
VAR. MFG. COST=$0.46
BELT
VAR. MFG. COST=$3.50
FRAME
VAR. MFG. COST=$0.62
COVER & SPRING
VAR. MFG. COST=$0.26
SPOOL, SHAFT & KEY
VAR. MFG. COST=$1.14
COVER
VAR. MFG. COST=$0.21
COVER & RATCHET GEARS
VAR. MFG. COST=$0.27
LOWER BRACKET
VAR. MFG. COST=$0.12
LATCH PLATE
VAR. MFG. COST=$0.29
LATCH/PRETENSIONER
VAR. MFG. COST=$10.90
MISC. =$3.47
PRETENSIONER
WEIGHT=1LBS. 11.8OZ.
VAR. MFG. COST=$10.90
LATCH ASSEMBLY
VAR. MFG. COST=$2.34
HOUSING
VAR. MFG. COST=$0.96
HOUSING
VAR. MFG. COST=$0.07
BEARINGS (7)
VAR. MFG. COST=$0.07
BARREL
VAR. MFG. COST=$1.57
BRACKET
VAR. MFG. COST=$0.26
BREACH & IGNITOR CASE
VAR. MFG. COST=$2.65
BRACKET
VAR. MFG. COST $0.29
WASHER
VAR. MFG. COST=$0.17
RIVET
VAR. MFG. COST=$0.07

Figure 3-15

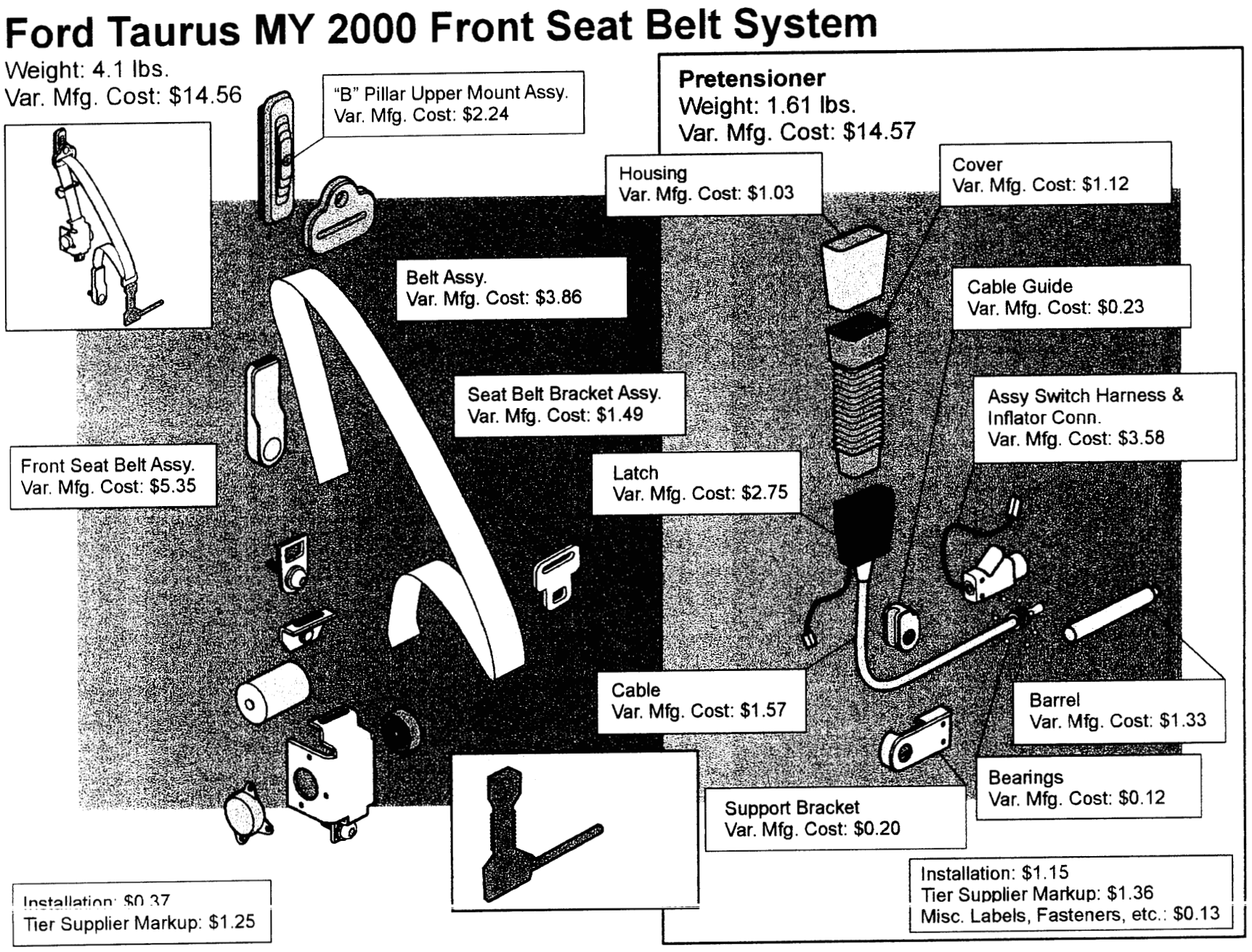
Ford Taurus MY 2000 Front Seat Belt System
Weight: 4.1 lbs.
Var. Mfg. Cost: $14.56
"B" Pillar Upper Mount Assy.
Var. Mfg. Cost: $2.24
Belt Assy.
Var. Mfg. Cost: $3.86
Seat Belt Bracket Assy.
Var. Mfg. Cost: $1.49
Front Seat Belt Assy.
Var. Mfg. Cost: $5.35
Installation: $0.37
Tier Supplier Markup: $1.25
Pretensioner
Weight: 1.61 lbs.
Var. Mfg. Cost: $14.57
Housing
Var. Mfg. Cost: $1.03
Cover
Var. Mfg. Cost: $1.12
Cable Guide
Var. Mfg. Cost: $0.23
Assy Switch Harness &
Inflator Conn.
Var. Mfg. Cost: $3.58
Latch
Var. Mfg. Cost: $2.75
Cable
Var. Mfg. Cost: $1.57
Barrel
Var. Mfg. Cost: $1.33
Bearings
Var. Mfg. Cost: $0.12
Support Bracket
Var. Mfg. Cost: $0.20
Installation: $1.15
Tier Supplier Markup: $1.36
Misc. Labels, Fasteners, etc.: $0.13

Figure 3-16

CHRYSLER CIRRUS SEAT BELT SYSTEM

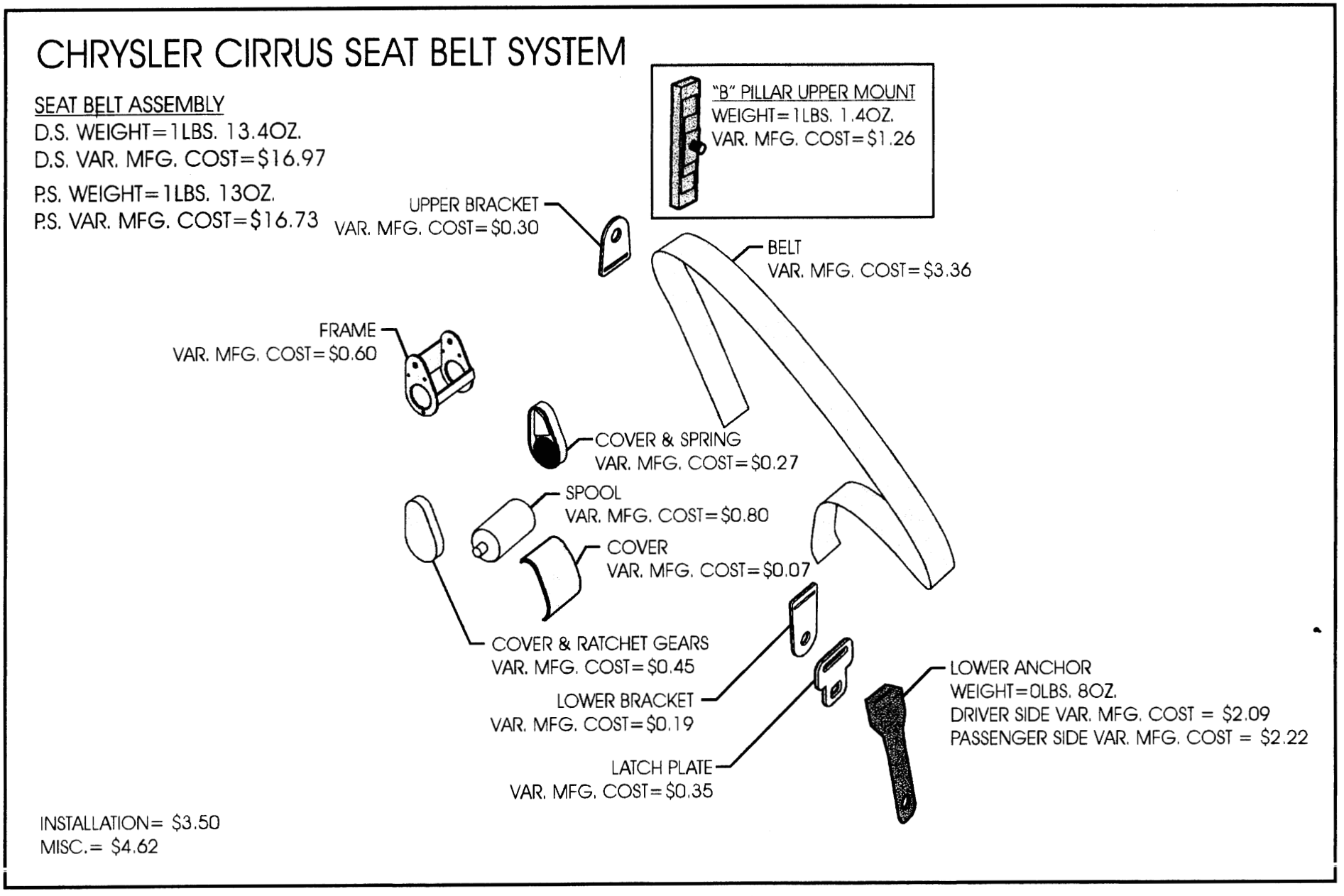

Figure 3-17

differences in that the Taurus has 29 discrete parts and the BMW 528i has 33. The Taurus has an embossed bottom cover for the latch that the BMW 528i does not have which adds more cost. Also, assembly labor content is greater for the Taurus. When the differences in material and assembly costs are considered, the Taurus pretensioner is approximately 3% greater in cost than that of the BMW.

The Chrysler Cirrus seat belt system is typical of most systems found in the U.S. marketplace. The difference in cost between this system and those discussed above provides a good indication of the incremental costs likely to be incurred when adding a pretensioner to the standard 3-point belt system

Percentage wise the cost for this type of upgrade to the Chrysler system would be approximately 61% for the Ford Taurus pretensioner and 28% for that of the BMW 528i.

3.3 - HEAD AIR BAG SYSTEMS

The costs for the Volvo and BMW 528i head air bag systems are presented in Table 3-3 and Figures 3-18, and 3-19. The difference in the systems is that the BMW unit is a tubular shaped air bag with a pyrotechnic inflator and the Volvo air bag system is shaped like a curtain with a stored gas pressurized inflator.

The BMW unit consists of a tubular bag stored above the head-liner. Upon inflation, the unit breaks down through the head-liner and comes to rest in an area adjacent to the front driver/passenger's head. As the tube inflates, it also shortens and when fully filled, it extends diagonally from the window frame just forward of the C pillar to a position on the A pillar above the instrument panel. This location results in the tube resting above the driver/passenger's shoulder when inflated.

The Volvo unit is also stored above the head-liner. It contains a bag in the shape of a "curtain" when inflated. The curtain is 55 inches in length and 13 inches from top to bottom when inflated. It extends from just a few inches aft of the **A** pillar to the **C** pillar and is intended to protect both the front driver/passenger and the rear passengers. The bag contains two sets of small pillows; each pillow is 3 inches wide and 10 inches high, and 3 inches deep. The first set is located in the area of the front driver/passenger's head when deployed. The second set is located in the area of the rear passenger's head when deployed. A stored pressurized gas (80% Argon, 15% Oxygen and 5% Helium) inflator is fired by a small charge upon a side impact.

The cost differences reflect design, material and assembly differences. Costs of a sodium azide inflator versus a pressurized gas inflator were discussed in a previous Section on driver/passenger air bags. Also, the Volvo curtain type head air bag protects both front and rear passengers while the BMW protects only the driver and right front passenger.

HEAD AIR BAG ASSY COST ($) COMPARISON - TASK ORDER 001 vs TASK ORDER 003

Description	Direct Mat'l	Direct Labor	Vari-able Burden	Tier Three Mar	Tier Two	Tier One Mar	Vari-able Mfg. Cost	Mfg. Mar (36%x Var)	Dealer Mar (11%x (V+M))	End User Cost	Tooling Cost x1,000	Capital Eq. Cost x1,000
TASK ORDER 003 - VOLVO MY 1999 HEAD AIR BAG (CURTAIN TYPE) ASSEMBLY												
Head Air Bag (Curtain) Assy Total Includ. Tier Sup. Markup -	21.36	1.89	6.51	0.30	3.00	6.04	39.10	14.08	5.85	59.03	473.0	1,384.0
TASK ORDER 001 - BMW SERIES 7 MY 1998 HEAD AIR BAG (TUBULAR TYPE) ASSEMBLY												
Head Air Bag (Tubular) Assy Total Includ. Tier Sup. Markup -	27.98	2.24	4.31	0.25	2.56	5.16	42.76	15.39	6.40	64.55	808.0	198.0

Volvo Side Head Air Bag System

Weight: 2.10 lbs.
Var. Mfg. Cost: $38.22

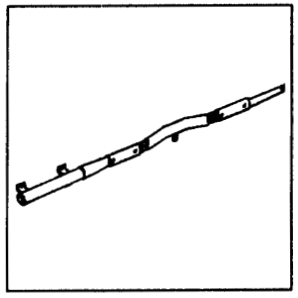

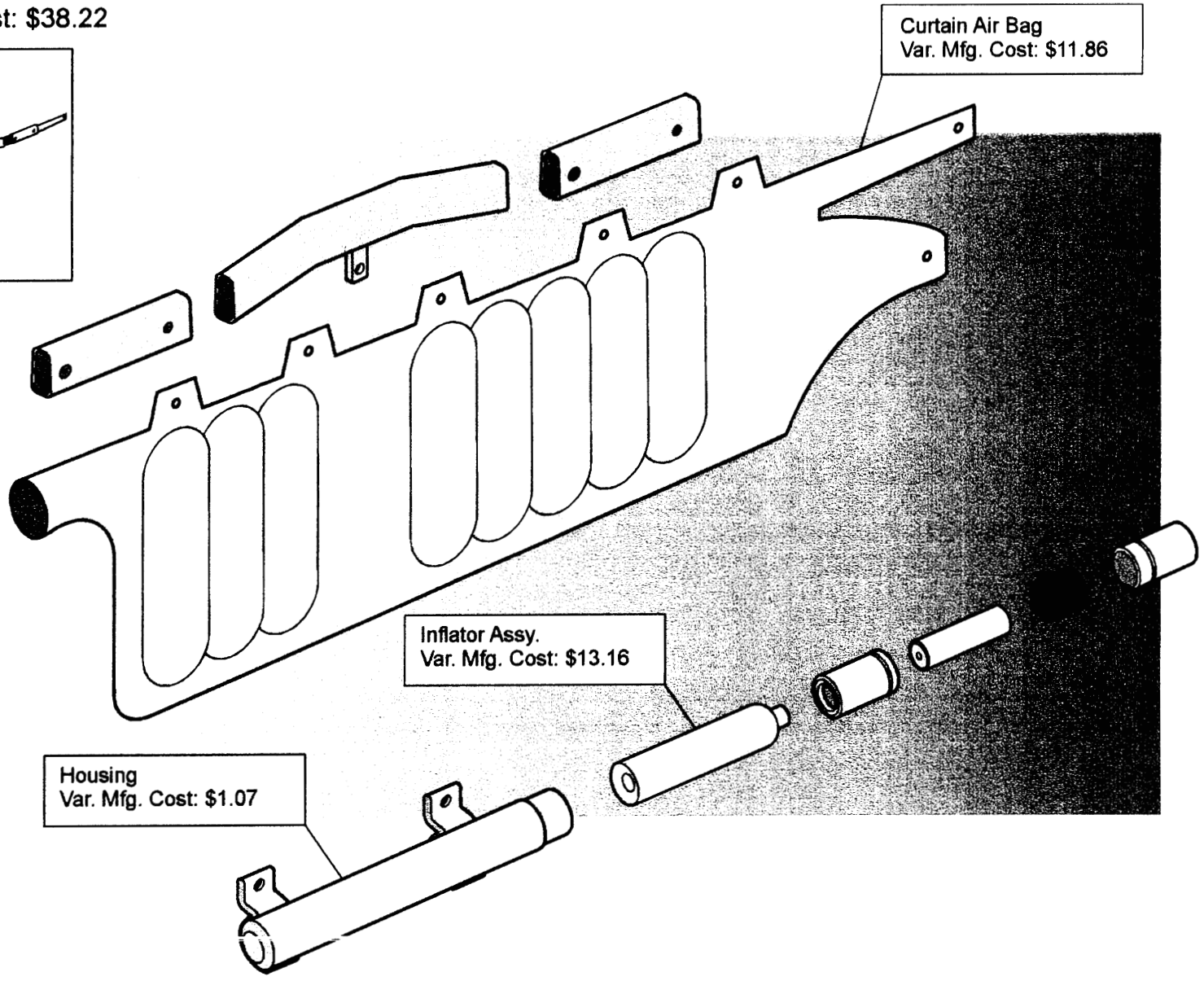

Figure 3-18

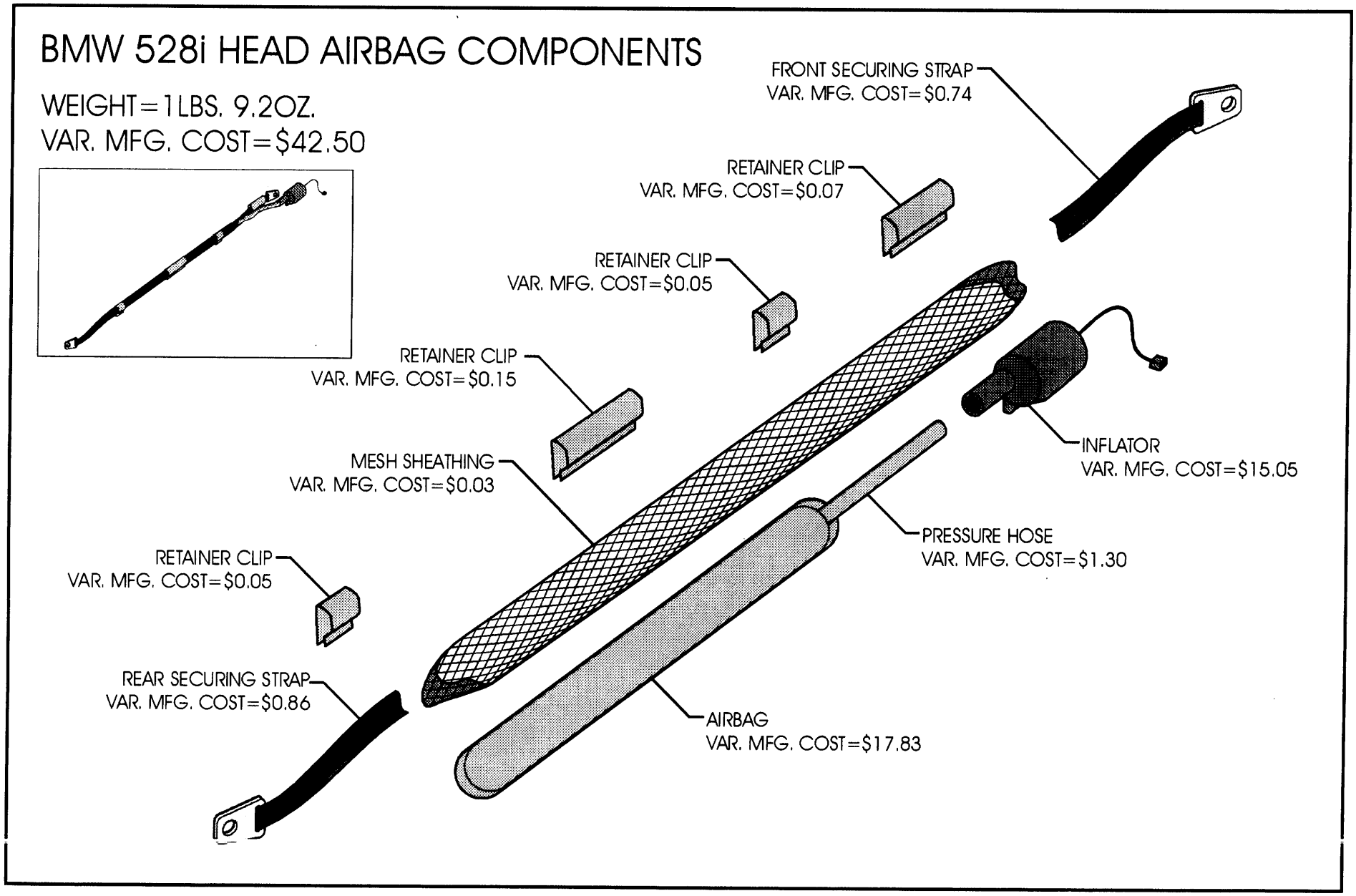
BMW 528i HEAD AIRBAG COMPONENTS
WEIGHT=1LBS. 9.2OZ.
VAR. MFG. COST=$42.50
FRONT SECURING STRAP
VAR. MFG. COST=$0.74
RETAINER CLIP
VAR. MFG. COST=$0.07
RETAINER CLIP
VAR. MFG. COST=$0.05
RETAINER CLIP
VAR. MFG. COST=$0.15
MESH SHEATHING
VAR. MFG. COST=$0.03
RETAINER CLIP
VAR. MFG. COST=$0.05
REAR SECURING STRAP
VAR. MFG. COST=$0.86
INFLATOR
VAR. MFG. COST=$15.05
PRESSURE HOSE
VAR. MFG. COST=$1.30
AIRBAG
VAR. MFG. COST=$17.83

Figure 3-19

3.4 - KNEE BOLSTER, PADDED VS. AIR BAG

Costs for passive padded driver side knee bolsters and a driver side knee bolster with an air bag are presented in Table3-4 and Figures 3-20, 3-21 and 3-22.

The passive knee bolsters evaluated in Task Order 001 (BMW 528i and Chrysler Cirrus) represent the typical panel covered with padding and an aesthetic cover. Normally, without the occupant lower extremity safety considerations, there would be a panel in this area for aesthetic purposes. The costs, therefore, have been prorated to cover only that portion attributed to that required for protection of the lower extremities.

The air bag knee bolster contains an air bag between the cover and the steel support plate. A sodium azide assembly inflates it. The steel plate costs have also been prorated at the bottom of Table 3-4 in consideration that a panel would be in that area anyway, as discussed above. The cost can be used to compare with a typical passive knee bolster.

3.5 - OCCUPANT DETECTION SENSOR, FRONT PASSENGER SEAT

Comparative costs of the BMW Z3 and the BMW 528i occupant detection sensors are present in Table 3-5. Photographs of the two sensors are presented in Figure 23. The BMW Z3 sensor is an upgrade from the BMW 528i sensor. The main difference is in the placement of the weight sensor nodes (they appear as black circles). The sensor assembly consists of two (2) mylar sheets with an electrical conducting ink pattern on each inner surface in the pattern shown. Electrical resistance is increased when a load is applied to the seat. The resistance is calibrated so that it is equal to a measurement of weight. When the resistance is increased to levels equivalent to preselected weights, the logic system in the control module senses the resistance level and can fire one, or two stages, of a two dual inflator. The sensor is also used to arm the passenger, door, and head air bag systems in the event that there is a passenger. The sensor can be used as a base for other functions relative to occupant safety in future applications.

3.6 - LEAD TIME ESTIMATES

The lead time estimate for developing the occupant restraint system components is relatively the same for those systems evaluated in Task 001 and Task 003. New items introduced in Task 003 do not involve any different materials and manufacturing processes than those already required to produce the components used in the systems analyzed in Task 001. The lead times for the various subsystems are presented in Table 3-5.

KNEE BOLSTER & KNEE BOLSTER AIR BAG ASSY COMPARISON - TASK ORDER 001 vs TASK ORDER 003 (DRIVER SIDE ONLY)

Description	Direct Mat'l	Direct Labor	Vari-able Burden	Tier Three Mar	Tier Two Mar	Tier One Mar	Vari-able Mfg. Cost	Mfg. Mar (36%x Var)	Dealer Mar (11%x (V+M))	End User Cost	Tooling Cost x1,000	Capital Eq. Cost x1,000
TASK ORDER 003 - KIA MY 1999 KNEE BOLSTER AIR BAG ASSEMBLY												
Total Incl. Tier Sup Markup	13.69	1.80	2.94	0.20	0.30	2.69	21.62	7.78	3.23	32.64	889.9	2,215.0
TASK ORDER 001 - BMW 528i KNEE BOLSTER ASSEMBLY (NO AIR BAG, COSTS PRO-RATED, SEE NOTE)												
Driver Knee bolster (3)	0.90	0.20	0.70	0.00	0.00	0.30	2.10	0.76	0.31	3.17	220.0	653.0
TASK ORDER 001 - CHRYSLER CIRRUS KNEE BOLSTER ASSEMBLY (NO AIR BAG, COSTS PRO-RATED, SEE NOTE)												
Driver Knee bolster	0.58	0.16	0.49	0.00	0.00	0.21	1.44	0.52	0.22	2.17	150.0	567.0

Note: The Knee bolster design includes a protection for the lower extremities of the driver. However; a panel would be used in this area for esthetic purposes even if the knee bolster protection was not included in the design. Therefore, the total cost of the Knee bolster was adjusted to reflect the cost related to the lower extremity protection.

Question - What is the cost penalty for the Knee Bolster Air Bag over a padded Knee Bolster?

Estimated Cost Penalty -
The KIA Knee bolster Air Bag area would have a panel for aesthetic purposes even if the Air Bag was not included. Using the same pro-rated ratio as above for the cover and plate we can subtract a similar amount from the KIA Air Bag Assembly costs to arrive at an estimated increase in cost for the additional air bag feature.

Delete Pro-Rated Cost for Aesthetic Panel	1.30	0.28	0.44				2.02					
Estimated Additional Cost for Air Bag Feature	12.39	1.52	2.50	0.18	0.27	2.40	19.26	6.93	2.88	29.07	889.9	2,215.0

Table 3-4

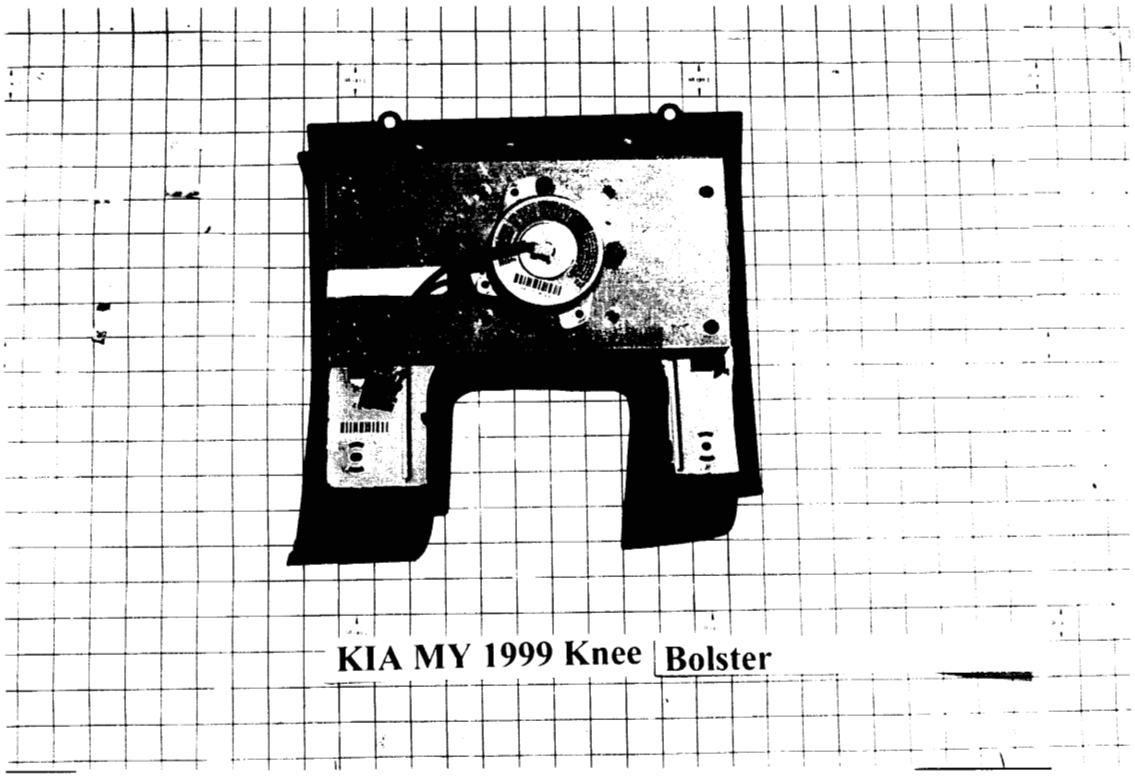

Rear View, Kia MY 1999 Knee Bolster Air Bag Assembly

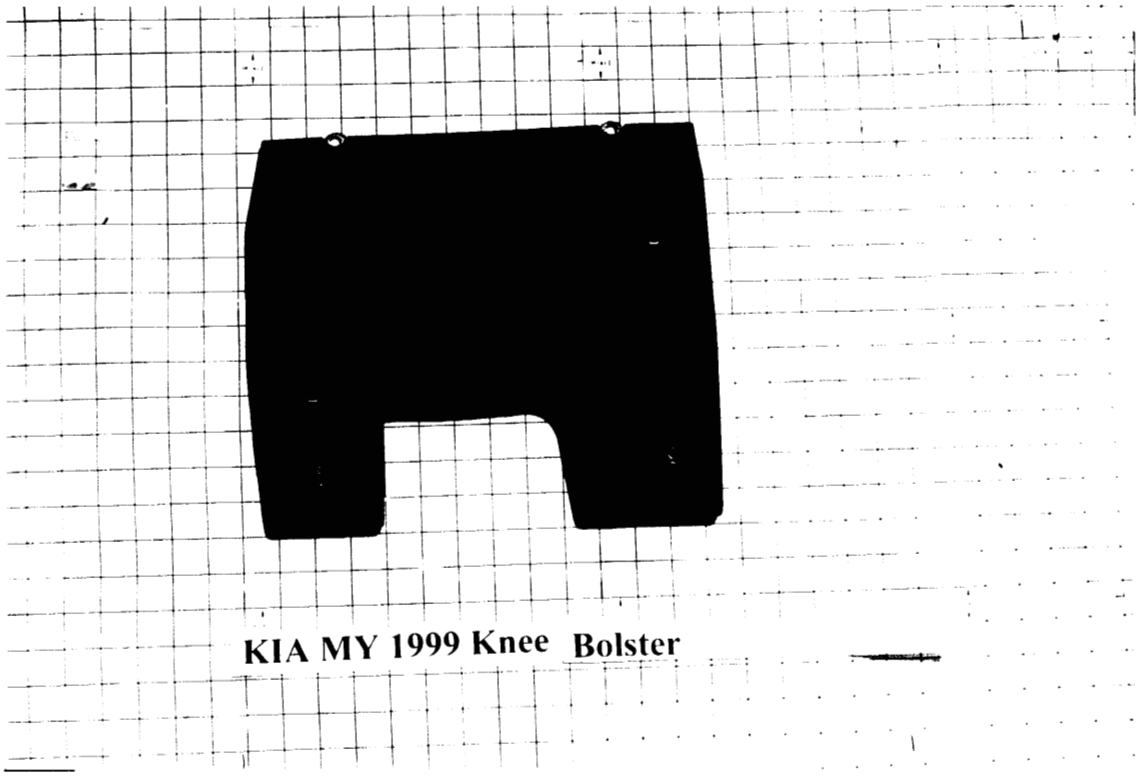

Front View, KIA MY 1999 Knee Bolster Air Bag System

Figure 3-20

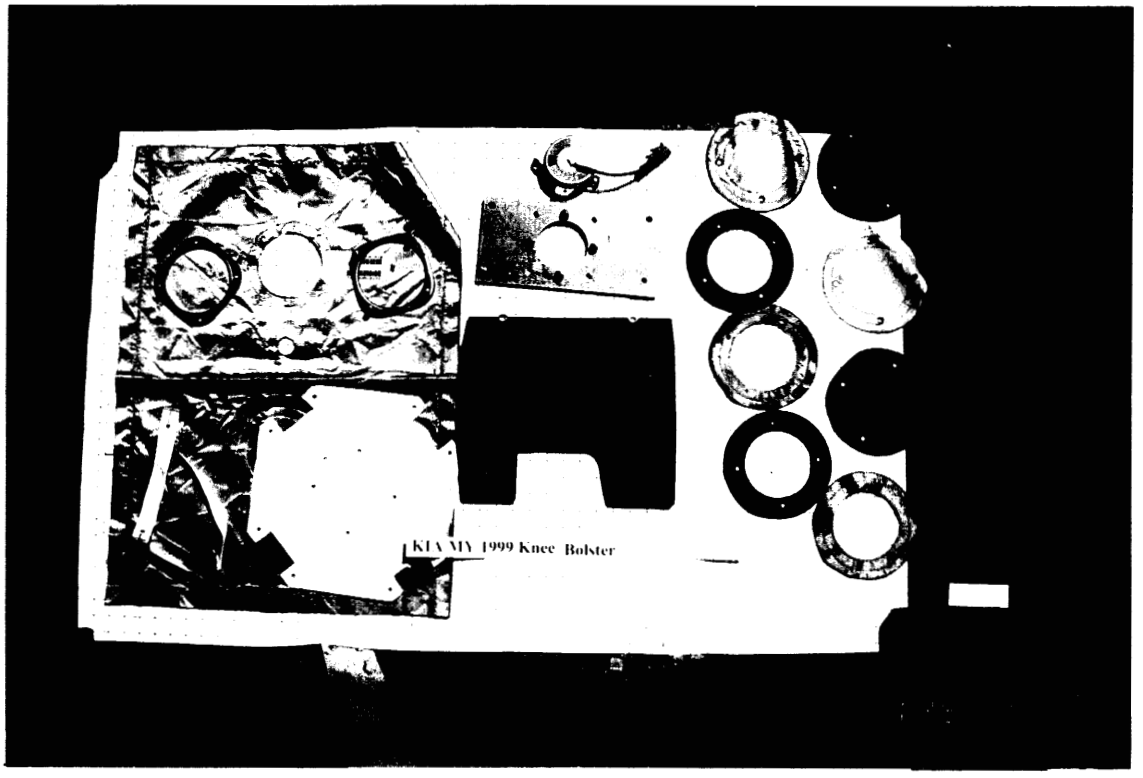

Exploded View, Kia MY 1999 Knee Bolster Air Bag Assembly

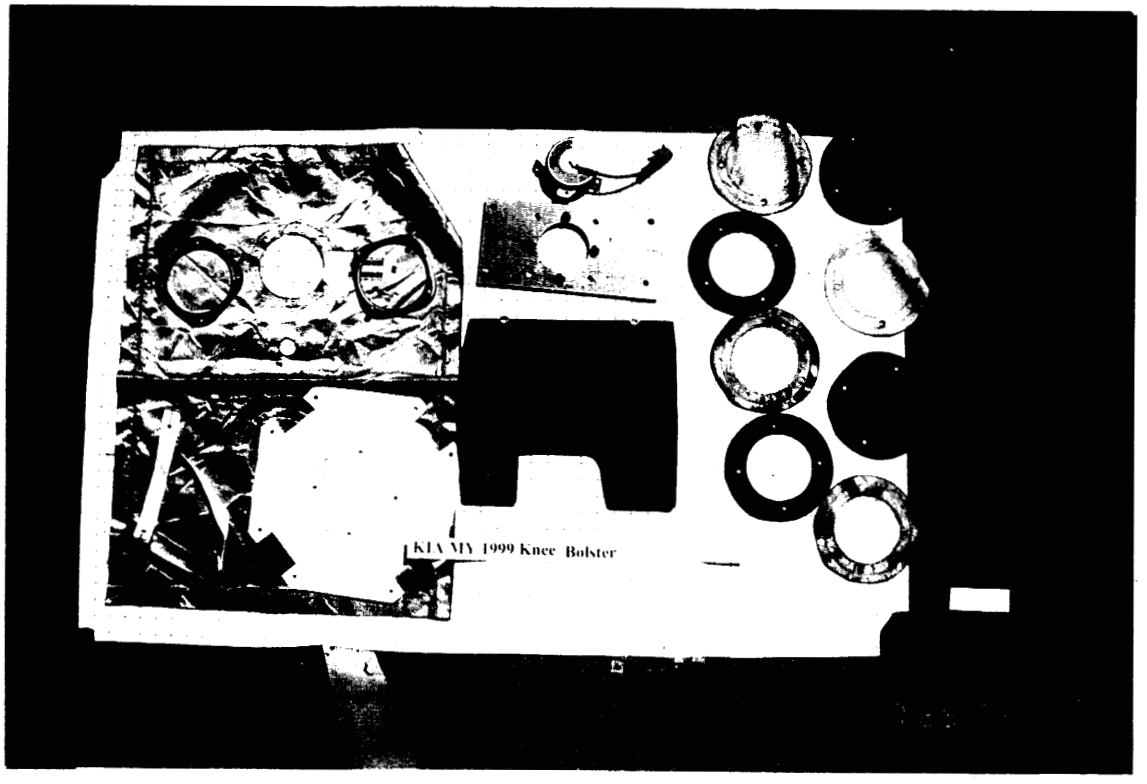

Exploded View, KIA MY 1999 Knee Bolster Air Bag System

Figure 3-21

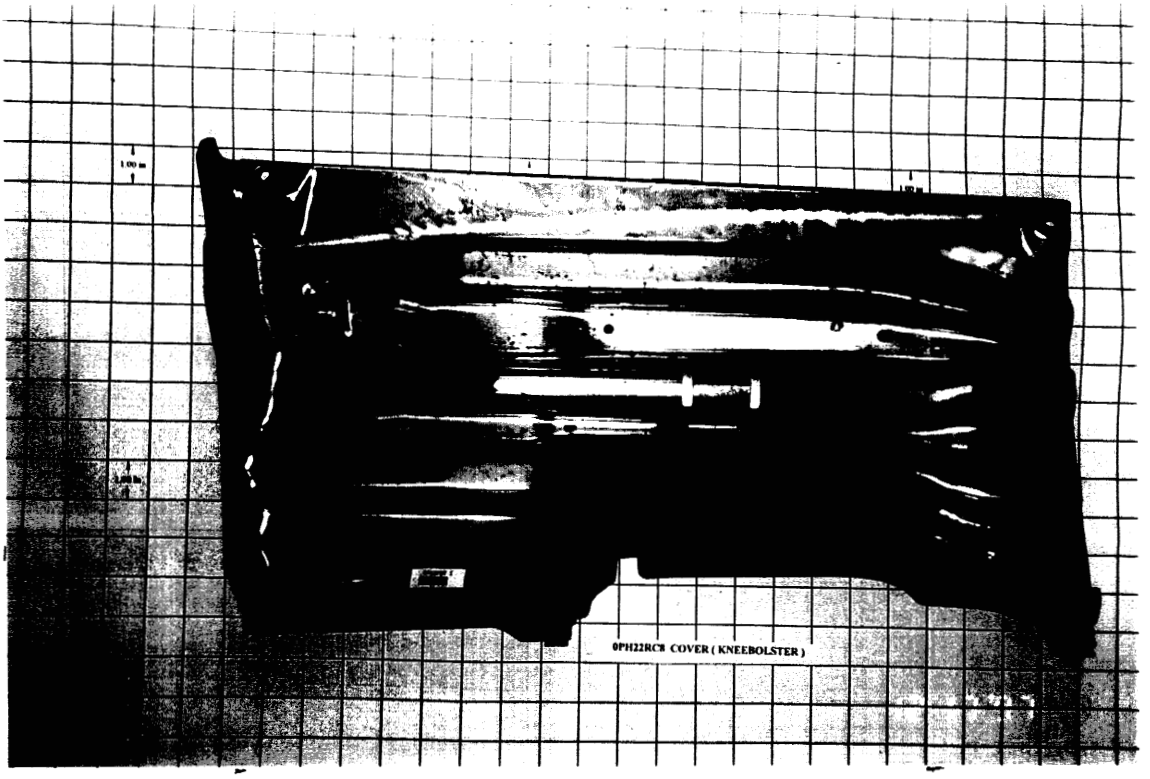

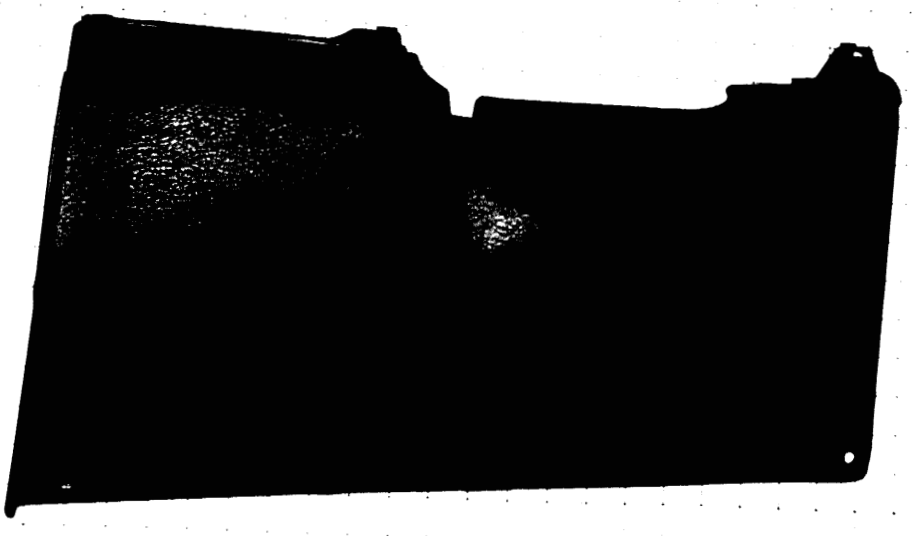

Chrysler Cirrus/Dodge Stratus Knee Bolster

Figure 3-22

PASSENGER SEAT OCCUPANT SENSOR COMPARISON - TASK ORDER 001 vs. TASK ORDER 003

Description	Direct Mat'l	Direct Labor	Vari-able Burden	Tier Three Mar	Tier Two Mar	Tier One Mar	Vari-able Mfg. Cost	Mfg. Mar (36%x Var)	Dealer Mar (11%x (V+M))	End User Cost	Tooling Cost x1,000	Capital Eq. Cost x1,000
TASK ORDER 003 - BMW Z3 MY 2000 OCCUPANT SENSOR, PASSENGER SEAT												
Occupant Sensor Assy	1.58	0.84	0.72	0.00	0.00	0.42	3.56	1.28	0.53	5.37	8.0	620.0
TASK ODER 001 - BMW 528i MY 1998 OCCUPANT SENSOR, PASSENGER SEAT												
Occupant Sensor Assy	0.96	0.54	0.52	0.00	0.00	0.42	2.44	0.88	0.37	3.68	0.0	640.0

Table 3-5

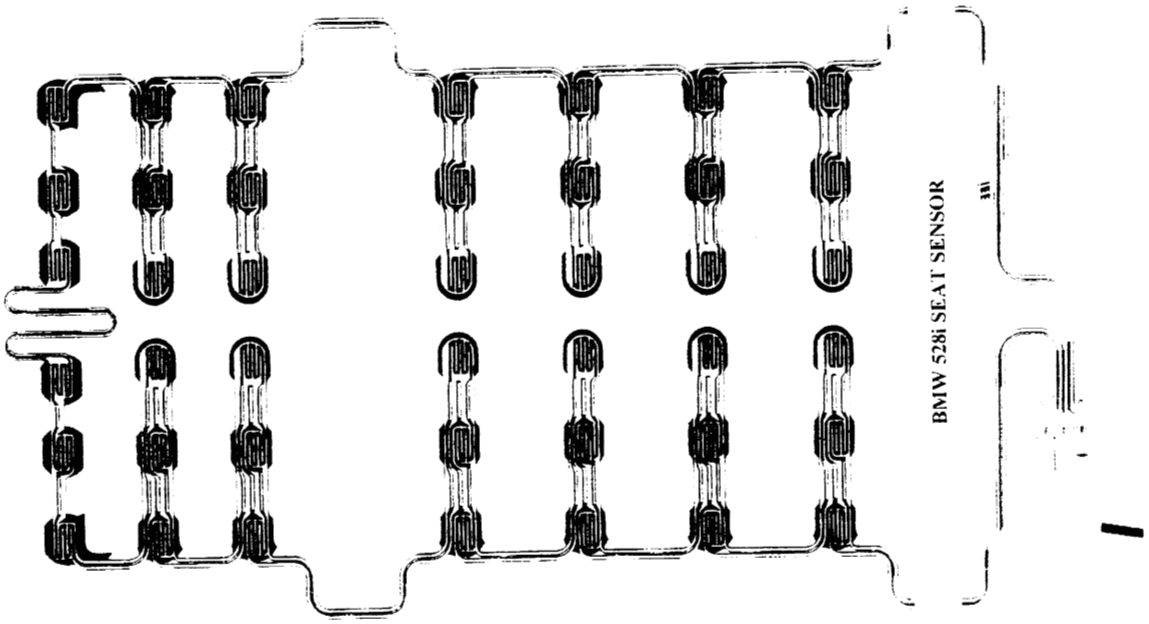

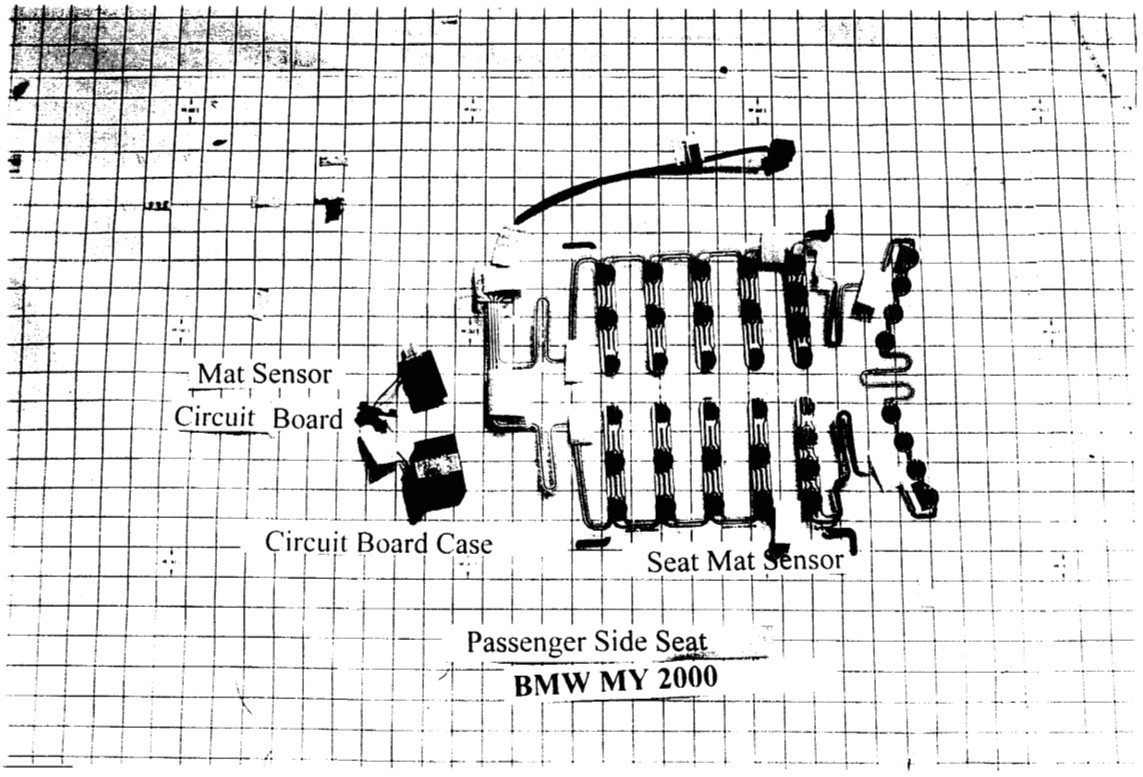

Passenger Side Seat Occupant Sensor, BMW Z3 MY 2000 Occupant Restraint Sys

Figure 3-23

Occupant Restraint System Component Lead Time Estimates

Maximum Lead Time Estimates for 250,000 Car Sets Annually

PRODUCT	SHOP	TOOLING	Max, Lead Time DBT
Inflators	Press Room	Upset Dies	8-6 Months
	Weld Lines	Fixtures	5-6 Months
	Machining	Chucks	4-5 Months
	Propellant Blend & Extrude	Extrusion Dies	3-4 Months
	Assembly	Fixtures & Aids	3-4 Months
Air Bags Assembly	Stamping	Prog. Dies	5-6 Months
	Injection Moulding	Molds & Trim	8-9 Months
	Cut & Sew	N/C Prog.	2 Months
	Assembly	Fixture	3 Months
Seat Belts	Press Room	Prog. Dies	8-9 Months
	Injection Moulding	Molds & Trim	8-9 Months
	Cut & Sew	N/C Prog.	2 Months
	Assembly	Fixture	4-5 Months
B Pillar Upper Mount	Press Room	Prog. Dies	6-7 Months
	Injection Moulding	Molds & Trim	6-7 Months
	Assembly	Fixture	3-4 Months
Seat Belt Lower Anchor With Latch	Press Room	Prog. Dies	5-6 Months
	Injection Moulding	Molds & Trim	6-7 Months
	Assembly	Fixtures	3-4 Months
Knee Bolster	Press Room	Prog. Dies	7-8 Months
	Weld Lines	Press Weld	12 Months
Controllers and Sensors	Press Room	Prog. Dies	7-8 Months
	Die Cast	Dies & Trim	7-8 Months
Wire Harness & Clock Spring	Injection Moulding	Mold	6-8 Months

Table 3-6

3.7 - CAPITAL INVESTMENT ESTIMATES

The capital investment required for producing the parts and components of the occupant restraint systems for plants, property, systems, equipment and tooling are presented in Table 3-6. This Table also includes the estimated depreciation or amortization write-off periods for these asset categories.

Capital Investment Estimates for Developing Occupant Safety Systems

PRODUCT	ITEM	ESTIMATED COST - x $1,000	DEPRECIATION OR AMORTIZATION TIME
Inflators	Plant	28,875	30 Yrs.
	Property	300	30 Yrs.
	Systems	15,457	10 Yrs.
	Equipment	32,955	7 Yrs.
	Tooling	8,322	3 Yrs.
Air Bag Assembly	Plant	7,590	30 Yrs.
	Property	75	30 Yrs.
	Systems	9,950	10 Yrs.
	Equipment	32,203	7 Yrs.
	Tooling	2,030	3 Yrs.
Seat Belts	Plant	2,750	30 Yrs.
	Property	35	30 Yrs.
	Systems	1,544	10 Yrs.
	Equipment	2,445	7 Yrs.
	Tooling	881	3 Yrs.
B Pillar Upper Mount	Plant	1,375	30 Yrs.
	Property	25	30 Yrs.
	Systems	505	10 Yrs.
	Equipment	294	7 Yrs.
	Tooling	218	3 Yrs.
Seat Belt Lower Anchor With Latch	Plant	1,925	30 Yrs.
	Property	25	30 Yrs.
	Systems	633	10 Yrs.
	Equipment	180	7 Yrs.
	Tooling	133	3 Yrs.
Knee Bolster	Plant	1,650	30 Yrs.
	Property	30	30 Yrs.
	Systems	650	10 Yrs.
	Equipment	939	7 Yrs.
	Tooling	180	3 Yrs.
Controllers	Plant	3,850	30 Yrs.
	Property	50	30 Yrs.
	Systems	5,002	10 Yrs.
	Equipment	16,161	7 Yrs.
	Tooling	2,303	3 Yrs.
Wire Harness & Clock Spring	Plant	13,650	30 Yrs.
	Property	200	30 Yrs.
	Systems	2,950	10 Yrs.
	Equipment	1,060	7 Yrs.
	Tooling	4,282	3 Yrs.

Table 3-7