TOYOTA
TOYOTA TECHNICAL CENTER, USA, INC.

86509

00 JUL 03 PM 2:07

June 28, 2000

NHTSA-00-7013-29

2000 JUN 28 P 4:42

Ms. Rosalyn Millman, Acting Administrator
National Highway Traffic Safety Administration
400 Seventh Street, SW
Washington, DC 20590

Re: Petition for Reconsideration – supplemental submission of figures
FMVSS 208, Occupant Crash Protection
Docket No.: NHTSA 00-7013; Notice 1 [65 FR 30680]

The attached is submitted on behalf of Toyota Motor Corporation, in response to NHTSA's final rule/interim final rule to amend FMVSS 208, which was published in the May 12, 2000, *Federal Register* [65 FR 30680].

As a follow up to our June 23rd submission, please find enclosed the figures which are referred to in our petition for reconsideration. Figures 5, 6, 7, 8, 9, 15, 17-1, 18-4, 19, 21, 22, 25, 26, 27, 28 are being submitted under a claim of confidentiality and therefore, are being submitted under separate cover to the Office of Chief Counsel. The attached version is submitted with the confidential figures removed.

Should NHTSA have any questions regarding these comments, please contact Mr. Chris Tinto of my staff at (202) 775-1707.

Sincerely,

Takashi Yoshie
General Manager
Toyota Technical Center, USA, Inc.

CC: Mr. Steve Kratzke, NHTSA Safety Performance Standards (fax copy)
Mr. Clarke Harper, NHTSA Safety Performance Standards (fax copy)

Enclosure

1850 M Street, NW, Washington, D.C. 20036 (202) 775-1707 FAX: (202) 463-8513

ES2000061352

SUMMARY

Toyota would first like to commend the agency on successfully issuing the advanced airbag interim final rule. We believe that it will provide for improved protection for a wide range of vehicle occupants, especially OOP children and small adults. But we continue to believe that there is no "smart" technology solution that will completely eliminate all consequences of improperly positioned occupants, especially considering the myriad of possible crash configurations, impacting objects, occupant's ages and sizes, occupant positions, and possible misuses of the restraint system.

Nevertheless, Toyota remains concerned with several issues contained in NHTSA's interim final rule, including the speed range for high speed barrier testing, several dummy positioning issues, seat suppression issues, CRS related issues, warning labels, and issues concerning the 5th percentile female, and therefore we are submitting this petition for reconsideration. We also are asking for clarification of several issues regarding partial compliance and dummy positioning.

Below, we have provided a brief summary of the major points of our position.

- *25 mph unbelted barrier test speed range* - Toyota believes that NHTSA' decision to reduce the test speed range from 18-25 mph to 20-25 mph, although directionally correct, does not adequately address the concerns we outlined in our comment to the SNPRM. As we described in our comments, conflicts exist between offering sufficient compliance margin for the 50% male in the upper speed ranges and the desire to minimize the risk to OOP children and small adults. Toyota believes that given the limitations of current seat suppression technology, regardless of its performance in certification tests under controlled conditions, automakers must be allowed the design flexibility to offer seemingly redundant technologies to protect OOP children in the real world.

- *Seat Suppression Technology* - As Toyota stated in its December 23rd comments to the agency, we remain concerned with problems that continue to exist with current seat sensing technology regarding the lack of adequate margin that exists between detection of the 5th percentile female and the 6YO child. However, we are concerned with other issues as well. First, these systems may not recognize anthropomorphic dummies in a similar manner as humans and therefore may force a compliance scheme that limits their potential benefits. Second, we are concerned with wide variations that may exist in production seats which adversely effect detection capabilities.

- *CRS Issues* – Toyota is concerned with availability and practicality of certain CRSs, and also would like to readdress the cinching force requirements of 134N. Toyota notes that the agency said that for 134N ,"...VRTC has found that this level is easily achievable...". Given our experience to the contrary, we believe that there could be a difference in the method of measuring how the 134 N is achieved. Toyota typically measures belt forces with a load cell transducer on the seatbelt anchor, along the load path, and in this configuration, 134 N is extremely difficult to achieve. Therefore,

Toyota believes that NHTSA should specify how the cinch force load is determined, and also insure that this force is achievable. We recommend that the load be measured along the belt path, with a load cell located between the belt anchor and the body anchor, with a maximum load of 67N.

- *Dummy Positioning* - Toyota would suggest several revisions to issues surrounding dummy positioning in the interim final rule, to make the regulation as objective as necessary to insure consistent compliance procedures can be followed. These include Section S22.2.2.5 "Standing on seat, facing forward", S22.2.2.6 "Kneeling on seat, facing forward", S22.2.2.7 "Kneeling on seat, facing rearward", and Section S20.2.1.3, S22.2.1.3, S24.2.3 – definition of "Plane B" for bucket and bench seats.

- *Low Risk Deployment Tests* - We also believe that for the low risk deployment tests, NHTSA should specify the seat positions (seat height, seat slide, head restraint height, etc.) for the 5th percentile female driver for positions 1 and 2, and the 3YO/6YO passenger. For certification of compliance, we believe these variables should be controlled to insure repeatable objective test.

- *S22.4 and S24.4 "Chest on module" and "head on instrument panel"* - Toyota believes that in many cases the procedures outlined will not result in the dummy's chest or head positioned against the instrument panel, which contradicts the intent of the original ISO procedures upon which these test positions are based.

- *5th Percentile Female Issues* – Toyota urges NHTSA to reconsider several issues surrounding the 5th percentile female, they include:

  a. *H Point Determinations* - Although Toyota outlined its concern in our December 23rd comment to the SNPRM, we would again ask NHTSA to reconsider its procedure for determining the H point of the 5th percentile female using a 3D manikin. As the attached data suggests, the H point varies greatly when NHTSA's procedures or the manikin are used. NHTSA's test procedures merely say "place dummy on seat", however, even with NHTSA's procedure, we find there can be wide variations in seating positions.

  b. *Driver Position 2, "Chin on rim" variations* - As we stated in our December 23rd comments, Toyota has found that the data from static tests with the 5th percentile female can varying widely based on the position of the dummies chin on the steering wheel rim. Toyota recommends a procedure to minimize this variability.

  c. *5th Percentile Female Chest Gs*- Toyota believes that the final rule requirement for 60gs is inappropriate, and urges the agency to adopt 73g as proposed by the Alliance.

  d. *5th Percentile Female Neck Risk* - Toyota continues to assert that the 5th percentile female can exhibit non-biofidelic responses in the neck region. We urge NHTSA to

suspend any neck injury criteria associated with the neck extension bending moment until this issue is addressed.

e. *5th Percentile Female Dummy Testing at 35 mph* - Toyota will outline its ongoing concerns with any future proposal from the agency,

- *Low Risk Deployment/ Data Acquisition Requirement for 300 ms* - In S4.11 of the interim final rule, NHTSA specifies a 300ms-test duration for the purpose of measuring injury criteria during the low risk deployment test. However, Toyota does not believe that this duration reflects the agency's intentions as described in the preamble, therefore, we recommend that NHTSA include its NPRM language, which was proposed as S22.4.2.12, S24.4.3.7, S26.4.2.11 and S26.4.3.10, which would truncated injury data prior to dummy interaction with vehicle components after the dummy's head is clear of the airbag.

- *Warning Labels* - Toyota recommends that NHTSA require the current pictogram and regulatory text (except "Even with Advanced Airbag") as opposed to the one specified in the new regulatory text. As we stated in our comments to the SNPRM, Toyota strongly believes that the current level of technology for suppression systems is not perfected, therefore a graphic that no longer depicts problems with CRS interaction with the airbag may degrade overall safety. We believe it is premature to tone down the message as is depicted in the final rule.

- *Partial Compliance* - Toyota appreciates NHTSA's consideration of our comments requesting partial compliance of the new requirements, specifically allowing manufacturers to immediately test with the rigid barrier in lieu of sled testing. However, we believe the final regulatory text is not clear, and therefore we want to confirm that the final rule indeed allows manufacturers to test new models with the 25 mph rigid barrier using only the 50% male to the new injury criterion, while not requiring the remaining test matrix (OOP, suppression, etc.) outlined by the final rule.

DISCUSSION

We encourage NHTSA to seriously consider the issues outlined below for inclusion in the final rule.

1. Speed Range for High Speed Unbelted Barrier Testing

Toyota recognizes that the agency considered comments from Toyota, DaimlerChrysler, and several others regarding the issue of testing "At 25 mph " vs. a speed range (namely 18-25 mph in the SNPRM). Based on these comments, in NHTSA's preamble to this interim final rule, the agency stated that it had decided to narrow the test speed range to 20-25 mph, because "...we believe that this difference in speed between the two tests will be sufficient to resolve manufacturers' concerns with the potential overlap of the low risk deployment and the barrier tests..."

However, Toyota believes that this reduction in speed range to 20-25 mph, although directionally correct, does not adequately address the technical concerns. As we described in our comments to the SNPRM, conflicts exist between offering sufficient compliance margin for the 50% male in the upper speed ranges and the desire to minimize certain risks to OOP children and small adults. Toyota believes that given the limitations of current seat suppression technology, regardless of its performance in certification tests under controlled conditions, automakers must be allowed the design flexibility to offer seemingly redundant technologies for OOP children in the real world.

We note that NHTSA recognized the need to use redundant technologies in its preamble, in stating that "...it was never our intention to limit manufacturers to using systems that provide only suppression, where appropriate, or low risk deployment, as opposed to systems that may combine suppression and low risk deployment. Moreover, we recognize that there may be safety benefits to using a combination of approaches..." Also, the agency stated that "...the combination of suppression and low risk deployment may better achieve the goal of minimizing risks."

Regardless of its intentions to the contrary, NHTSA's final requirement for testing in the 20-25 mph speed range will not allow manufacturers to certify to the "low risk" deployment tests unless the high stage threshold is dropped substantially. This may result in a condition where vehicle compliance and certification is assured, however these lower thresholds will result in potential for more high stage deployments in the field, which Toyota strongly believes is directionally incorrect.

If NHTSA ultimately decides that the speed range will remain, then manufacturers will likely choose to use a higher-powered low stage because of this situation, rather than the alternative solution of dropping the high-stage threshold substantially to cover the 50% male within the speed range. This higher-powered low stage will offer adequate protection for both the 5th percentile female and 50th percentile male, however it will be too high in some situations for the OOP child. Manufacturers will then be forced to comply only with the suppression option, which as we stated earlier offers limitations in real world performance

for human occupants. We strongly urge NHTSA to again consider the speed range, and only require testing "at 25 mph" with the 50% male.

a. Test Speed Range - "20-25 mph" vs. "At" 25mph

As we stated in our comments to the SNPRM, we base our recommendation that the agency adopt testing "At" 25 mph (+0/-1 for test speed variability), rather than a speed range (e.g., 20-25), on the desire by automakers to comply with the articulated desire of NHTSA and Congress to *minimize* the risk to at-risk groups, and in fact, we believe that ISTEA mandates that this be the case. However, NHTSA's requirement for testing in this speed range, although somewhat reducing the risk to the at-risk groups, does not *minimize* the risk.

There is an inherent technical conflict between the desire to minimize risk to a child and/or a 5% female and the inflation energy required to offer unbelted protection to a 50% male at the higher test speeds. For dual stage inflator systems, Toyota's basic premise is that, for the passenger side, the "low" stage should be tailored to minimize risk to OOP children (even if used in conjunction with a suppression system), whereas the "high" stage would offer unbelted 50% male protection. For the driver's side, the "low" stage would be tailored as much as possible to the OOP 5% female driver, with the high stage offering similar protection for the 50% male. This philosophy would be used regardless of whether or not we choose to certify to suppression or low risk deployment, given the inherent limitations of suppression based systems.

Of course, Toyota has been actively developing suppression based technology, however, as we explained in detail in our December 23rd comment to the SNPRM, this technology can not assure that in all cases an airbag will be suppressed when it would be desirable to do so. For that reason, Toyota feels that it is imperative that NHTSA leave open the option to allow manufacturers to design for minimizing risk to children with the low stage inflation (certification to the "low risk deployment" option), regardless of whether or not a suppression system is present.

b. Conflict between OOP children and 50% Protection

To address the inherent conflict between protection for a 50% male in high speed events and minimizing risk to OOP children and small adults, manufacturers may choose different design philosophies to address this problem. However, for those manufacturers that choose to certify to "low risk deployment" the low stage inflator pressure will not be of sufficient energy to adequately protect a 50% unbelted male in a 25 mph rigid barrier test.

To illustrate the issue, Figures 1-3 demonstrate the inherent technical conflict between unbelted test requirements "at 25 mph" vs. "20 to 25 mph" in a rigid barrier test. The reference line depicts the energy required (i.e. inflation pressure) to protect a 50% unbelted male dummy in a rigid barrier test. The indices of the charts are inflator output vs. a range of FRB test speeds. At any given FRB speed (x-axis), one can simply move upwards to a point on line A to see the corresponding order of magnitude inflator output generally necessary (y axis) to ensure adequate 50% male compliance in this test.

The graph on the right shows the current situation with depowered airbags. Basically, one can see that since there is only one level of inflation, in crash conditions where speeds are less than the RB test speed, the inflator output is more than is required to meet crash conditions, resulting in increased risk to OOP occupants and other at-risk groups in certain situations.

However, in the case of a dual stage inflator system, the system can now be "tuned" to offer lower inflation pressures at lower crash severities, as shown in the chart on the left. In this case, risk is reduced by offering a lower first stage (i.e. with delay). However, in the case of a dual stage inflator system, the limitation of these systems is that they can only offer two discrete inflation pressures (hence "dual" stage), each of which has a corresponding grey zone (no fire -to- all fire range shown as shaded bands.)

Therefore, when comparing a dual stage inflator to a single stage system, advantages exist in reducing the number of high stage deployments in the field, reducing the risk to OOP occupants.

However, Toyota believes that these potential advantages can be greatly enhanced if NHTSA allows manufacturers the design flexibility necessary by setting the certification requirements to include testing "at 25 mph" as opposed to a speed range (e.g. 20-25 mph). Figure 2 illustrates this point. If the agency's requirement is set to "at 25" (right chart), the high stage "all deploy" threshold can be set at a speed slightly below 25 mph, which would ensure that the inflator could offer the necessary energy to meet the output requirements of line A to protect the 50% male. More importantly, this would also serve to minimize high stage deployments in the field, as evidence suggests that most crashes are of a lower severity than those represented by a 25 RB test speed. Therefore, in this case, the high stage can be used solely to ensure performance for the 50% male, whereas the low stage can be set to a lower inflator pressure to minimize OOP risks

However, if certification must be assured for the 50% male at all speeds from 20 "up to" 25 mph., this will require that the high stage threshold be lowered to meet adequate compliance margins (figure 2 - left chart), or that the low stage pressure be raised to cover the 50% male at these interim speeds (figure 3).

Toyota has been studying these conflicting requirements through a range of analytical methods, which include full-scale testing, sled testing using vehicle specific crash pulses, and modeling tools. It should be noted that each vehicle has inherently different characteristics, so the analysis provided here varies depending on vehicle and equipment variations. However, for the sake of illustration, assume a test speed of 22 mph. Again referring to figure 1, following this point (22 mph) on the x-axis upwards to line A, one can see that the output required is <u>somewhere between</u> the low stage and the high stage pressure (y axis). Since these inflators are not infinitely variable, but instead offer two discrete outputs, if the requirements are a range (e.g.20-25 mph), it will be necessary to either a) move the threshold downward for the high stage to ensure sufficient output to protect the 50% male (as shown in

figure 2) or, b) increase the low stage inflator output to a higher level to cover the 50% male at this speed (figure 3).

Lowering the threshold will potentially increase the number of deployments in the field, and could increase risk to OOP children and small adults in certain situations. As we stated previously, if NHTSA ultimately decides that the speed range will remain, then manufacturers might choose to use a higher-powered low stage than they otherwise would, rather than the alternative solution of dropping the high-stage threshold substantially to cover the 50% male within the speed range.

However, *raising the low stage pressure significantly will result in a system that cannot meet "low risk" deployment options,* and therefore, if a manufacturer desires to meet this certification option, its only available countermeasure is to drop the high stage threshold speed. The agency recognized the danger of needlessly lowering thresholds, and in its preamble to the SNPRM it stated that "...we want to be sure that the standard does not push deployment thresholds downward, i.e. cause airbags to be deployed at lower speeds than are appropriate for maximum occupant protection..."

In conclusion, although the dual stage systems under development may be an improvement over today's single stage inflators, adopting a 20 to 25mph range may not address the potential risks to OOP children and small adults when compared to the "at 25" mph option. Since the ISTEA mandate was to minimize risk to those occupants as a top priority, a requirement for a speed range of 20-25mph is not compatible with that philosophy.

2. Seat Suppression Technology

As Toyota stated in its December 23rd comments to the agency, we remain concerned with problems that continue to exist with current seat sensing technology regarding the lack of adequate margin between detection of the 5th percentile female and the 6YO child. However, we are concerned with other issues as well. First, these systems may not recognize anthropomorphic dummies in a similar manner as humans and therefore may force a compliance scheme that limits their potential benefits. Second, we are concerned with wide variations that may exist in production seats which adversely effect detection capabilities.

a. Variations in Production Seats

Toyota has determined that variations exist when considering cushion "hardness" and cover "tightness". These variations found in production seats introduce a potentially larege range when attempting to discern between the 5th percentile female and the 6YO child. Although it is possible to tailor the seat sensor for each combination of cushion harness ("hard" vs "soft") and cover tightness ("tight" vs. "loose"), it is impossible to determine which combination will exist for a given seat in a given vehicle due to unavoidable manufacturing variability, therefore it is extremely difficult to tune the sensor correctly for a given combination in the field.

In the most extreme cases, we find that the margin of detection is insufficient for certification between a 5th percentile female and 6YO child.

b. Dummy vs. Human Detection

Toyota also finds that the seated pressure distributions and profiles differ significantly between actual human test subjects and the 5th percentile female or 6YO dummy (figures 4-6). The problem is that these differing profiles demand differing design thresholds. In other words, the "threshold" (i.e. the limit at which the seat sensing algorithm would choose to suppress the bag) we would optimally choose for a 6Y0 dummy vs. a 5th percentile female dummy will be different than the threshold we would choose when testing with human equivalents. As given by the attached figures 7-9, dummies tend to shift the "on/off" threshold upward to heavier weights when compared to humans. Figure 7 gives the airbag on/off threshold that would be determined by using a 5th percentile and a 6yo dummy, by plotting the various seat cushion and seat cover variations for the given dummies.

Figure 8 illustrates the problem. When this same sensor is tested with human test subjects for the variety of seat cushion and seat cover combinations, we find that the design threshold must be lowered to accommodate the human test subjects. (Figure 9 provides the human surrogate data, which shows that all the test subjects were within the specified ranges for the 5th percentile female and 6YO dummy.)

Therefore, if we set the threshold for use with dummies, we find that almost 50% of the human surrogates for the 5th percentile female tested are not accurately detected, resulting in a suppressed airbag. Obviously then, optimizing this system for dummies would not allow optimum operation for humans in real world conditions.

The final rule stipulates that for technologies that recognize people rather than dummies, the agency would require manufacturers to "...provide NHTSA with information and equipment necessary to circumvent the suppression system for vehicle crash tests." Although we understand that this is to insure that these same vehicles could be tested with a dummy for full scale crash testing, we also believe that there is a need for the regulatory text to insure that these systems are tested correctly (i.e. as designed) in the static suppression tests. Without correct and satisfactory seating profiles, manufacturers cannot be assured that systems that are designed to and tested with dummies will work correctly in the field.

Toyota strongly agrees with NHTSA's statement that "...we believe vehicles should be designed to protect people rather than test dummies." To that end, for the OOP suppression tests that also may include weight based or pressure sensitive seat sensing technology, NHTSA should allow OEMs to specify *how* these devices are to be tested for compliance. The agency (or its compliance lab) would then be required to test with either a human or dummy for compliance testing, based on the method of certification used by the OEM.

For human subject testing, NHTSA must also consider some sort of standardization or control over the human subjects for this test. Toyota has found that weight and height are not sufficient to control for variances in humans. We recognize that an improved device with a

more human-like profile is under development, however, as NHTSA pointed out in its preamble to interim final rule, it is not available at this time. We hope to evaluate the new dummies soon, and plan to offer further comments as to the acceptability of this device as a human surrogate after we gain some experience with its use.

In the meantime, manufacturers must be assured that adequate lead-time is given for complete development and integration of these new generations of airbag suppression technologies into a given vehicle platform. Toyota is concerned that until a satisfactory device is accepted by the agency and added to the regulatory text, manufacturers may have certification/compliance problems if the agency does not require that its labs test using the same methods as the manufacturer (i.e. dummies vs. human test subjects). In other words, NHTSA must insure if an automaker certified with human subjects, NHTSA's test lab would also check for compliance with human subjects.

As discussed above, NHTSA must recognize that there is an extremely urgent need for human surrogate test devices, like the OCATD currently under development, which can better mimic human characteristics that would allow correct calibration and certification testing of seat suppression devices. In the meantime, NHTSA must insure that manufacturers' internal compliance testing can be extrapolated to NHTSA's test labs, and we urge the agency to add a statement to the regulatory text which requires test labs to test in a similar manner as was done by the vehicle manufacturer. However, until a device is approved and added to the requirements, manufacturers can not be assured that certification problems will not continue to exist.

3. CRS Issues

a. Availability and Practicality

Toyota believes that problems currently exist, and will continue to exist, with the availability of CRSs specified in the current requirements. Our experience indicates that at least two the CRSs required for testing are not available – namely, the Institutional 4590 and the Britax Cruiser 121.

Also, Toyota believes the Cosco Dream Ride should be removed from the requirement for vehicles with bucket seats. The size of the seat and its placement make it impractical as a test device, and in fact, in most models, it interferes with the console shift lever and therefore can not be used in the front seat (figure 10).

In addition, CRS model designations change regularly, and vehicle manufacturers need a way to insure that the CRSs which are used for certification will also be readily available for many years, given the design and production cycle for any given model line. We strongly urge NHTSA to work towards a set of standardized seats, which could be produced as surrogates for current CRS designs.

At a minimum, it seems to be a difficult task to monitor the status of all the CRS's indicated in the final rule, and insure that test seats required in the rules are available for a sufficiently

long time. Given the constant changes in CRS models, how will the agency insure that adequate numbers of the required CRS's will be available to OEMs and to compliance facilities? Will NHTSA be responsible for monitoring CRS availability at any given time? How will changes in seat model designations be handled? Will NHTSA issue a notice or technical amendment to the final rule each time a seat model is changed?

Given the questions posed above, it would seem advantageous to work towards a standardized seat or set of seats that could be used in place of seats whose availability will continue to be questionable.

b. Cinching Force for the CRS

As Toyota stated in its comments to the SNPRM, we are very concerned with the cinching force requirements of 134N, and instead we recommended that NHTSA adopt a more realistic load, namely 67N as specifies in FMVSS 213. We also note that attachment 4 of Ford's December 22nd comment to NHTSA stated that in the field, loads tend to be a maximum of roughly 75N, with more usual loading tending to be about 60N.

Toyota has found that the level of tension specified in the rule (i.e. 134N) can usually only be achieved by installing the CRS in the vehicle seat, buckling the seatbelt, and moving the seat forward until the desired cinch force level is achieved. However, moving the seat forward will not allow suppression testing at the required rearward and mid track position, as specified in the interim final rule.

In addition, a cinch force of the level prescribed by NHTSA puts the seat in an unrealistic position on the vehicle seat. Figures 11-12 illustrate the problem. The CRS tends to rotate, placing it at an angle that is unrealistic for a child's basic comfort, and it is doubtful any parent would install a seat in this manner. Given our experience, we again urge the agency to reduce the level to a more realistic level of 67N.

Toyota notes that the agency said that for 134N ,"...VRTC has found that this level is easily achievable...". Given our experience to the contrary, we believe that there could be a difference in the method of measuring how the 134 N is achieved. Toyota typically measures belt forces with a load cell transducer on the seatbelt anchor, along the load path, and in this configuration, 134 N is extremely difficult to achieve.

Therefore, Toyota believes that NHTSA should specify how the cinch force load is determined, and also insure that this force is achievable. We recommend that the load be measured along the belt path, with a load cell located between the belt anchor and the body anchor, with a maximum load of 67N.

4. Dummy Positioning

a. General Suppression Related Issues

Toyota would suggest several revisions to issues surrounding dummy positioning in the interim final rule, to make the regulation as objective as necessary to insure consistent compliance procedures can be followed.

- In Section S22.2.2.5 "*Standing on seat, facing forward*" there is no description of how the dummies feet are to be positioned. For example, a human could conceivably stand with his/her feet positioned on the bolster, whereas the dummy, due to limitations in its range of motion, can only stand in the center of the seat cushion. Therefore the regulatory text should specify the dummy position more precisely, including the spacing of the feet and their relative position to the dummies vertical centerline. Toyota recommends that the dummy's feet be spaced apart at a distance of 50 mm +/- 5 mm along the longitudinal centerline of the seat.

- Similar to our comment regarding the standing positioning, Toyota also recommends that S22.2.2.6 "*Kneeling on seat, facing forward*", and S22.2.2.7 "*Kneeling on seat, facing rearward*", specify the knee spacing for the dummy in the kneeling position. Toyota recommends that the dummy's knees be spaced apart at a distance of 50 mm +/- 5 mm along the longitudinal centerline of the seat.

- Section S20.2.1.3, S22.2.1.3, S24.2.3 – definition of "Plane B" for bucket and bench seats. Plane B refers to a vertical plane through the right front outboard seat parallel to the vehicle longitudinal centerline, the same distance from the longitudinal centerline of the vehicle as the center of the steering. Toyota has found that "Plane B" in the geometric center of some bucket seats is not the hip point (figure 13). Therefore, in the case of these types of seats, Toyota recommends that NHTSA specify the hip point to locate the dummy, rather than "Plane B".

- For the suppression tests, Toyota recommends that the regulatory text specify that the data cable be disconnected and removed, given that the data cable adds weight to the dummies.

b. Low Risk Deployment Tests

- Toyota also requests that NHTSA specify the seat positions for the OOP low risk deployment tests for the 5th percentile female driver for positions 1 and 2, and the 3YO/6YO passenger. For example, for drivers position 2, S26.3.1 states that "...There are no seat track, seat height, or seat back angle requirements." For the other tests, the dummy position relative to the seat is not specified, nor is the seatback angle, head restraint height, fore and aft positions, etc. For certification of compliance, we believe these variables should be controlled to insure repeatable objective testing.

The following variables relating to seating position are currently not specified, and therefore Toyota recommends that they be specified as follows:

5th %-tile Driver	*Parameter*	*Positioning*	*Toyota Recommended Position*
Position 1	Seat slide	In procedure	
	seat back angle	No requirement	Neutral Position
	Seat height	No requirement	Manufacturer's recommended position
	head restraint angle/height	No requirement	Neutral Position
Position 2	seat slide	No requirement	Front-most position
	seat back angle	No requirement	Neutral Position
	Seat height	No requirement	Manufacturer's recommended position
	head rest angle/height	No requirement	Neutral Position
3YO, 6YO Passenger			
Position 1	seat slide	No requirement	Rear-most position
	Seat back angle	No requirement	Neutral Position
	Seat height	No requirement	Manufacturer's recommended position
	Head rest angle/height	No requirement	Neutral Position
Position 2	Seat slide	In procedure	
	Seat back angle	In procedure	
	Seat height	No requirement	Manufacturer's recommended position
	Head rest angle/height	No requirement	Neutral Position

- NHTSA's procedure outlined in *S26.2.8 and 26.3.7* for positioning the dummy requires manufacturers to *"...move the seat forward...to the forwardmost seat track position or until any portion of the dummy contacts the steering wheel ...."*. However, Toyota has found that pre-loading the dummy in this manner unintentionally loads the neck, causing different postures when compared to postures for unloaded necks. Toyota has found that at times the seat does not lock in the specified position, so we are forced to push the seat forward to engage the seat track. This then loads the neck and moves the torso roughly 15 mm closer to the wheel.

  In the past, only the *dummy* was moved to properly position it against the wheel. However, NHTSA's newly prescribed procedure moves the *seat* to position the dummy, which preloads the dummy. To illustrate, figure 14 shows the relative postures for a preloaded and non-preloaded dummy. The effect of pre-loading the dummy is that the torso moves

roughly 20 mm closer to the steering wheel, if loaded in the manner prescribed by NHTSA. This also greatly affects the resultant values for neck injury, as given by figure 15.

Therefore Toyota proposes that the procedure be as follows:

"While maintaining the chest instrument cavity rear face orientation, move the seat to the fully forward seat track position or until any part of the dummy contacts the steering wheel, without loading the neck. In a manual seat, when any part of the dummy contacts the steering wheel, move the seat slide backward one notch to avoid loading the dummy's neck, and then move the dummy into the proper position."

- *Passenger - "Chest on Module" and "Head on Instrument Panel"*

  Sections 22.4 and 24.4 of the final rule describe the test procedures for low risk deployment tests of the 3-year-old and 6-year-old, respectively, for "chest on module" and "head on instrument panel". However, Toyota believes that in many cases the procedures outlined will not result in the dummy's chest or head positioned against the instrument panel, which contradicts the intent of the original ISO procedures upon which these test positions are based.

  Therefore, to assure correct chest and head contact with the module and the instrument panel respectively, Toyota recommends that the sections 22.4.2.4, 24.4.2.4, 22.4.3.5 and 24.4.3.5 be revised in a manner similar to that outlined in comments submitted by the Alliance to this interim final rule.

  The first sentence in S22.4.2.4 and S24.4.2.4 should be revised to read,

  "With the dummy's thorax instrument cavity rear face vertical and Point 1 in Plane C, move the dummy forward until the dummy's chest contacts the instrument panel."

  The last sentence in S22.4.2.4 and S24.4.2.4 should be revised to read,

  "If the dummy's head contacts the windshield and keeps the dummy's chest from contacting the instrument panel, lower the dummy and move it forward again until there is no more that 5 mm (0.2 in) clearance between the head and the windshield, and the chest contacts the instrument panel."

  Concerning S22.4.3.5 and S24.4.3.5, the opening text,

  "If contact has not been made..." should be deleted and the first sentence should be revised to read, *"Apply a force towards the front of the vehicle on the spine of the dummy between the shoulder joints, rotating the dummy forward until the head or torso comes into contact with the vehicle's instrument panel."*

5. 5th Percentile Female Issues

a. H Point Determination

Although Toyota outlined its concern in our December 23rd comment to the SNPRM, we would again urge NHTSA to reconsider its procedure for determining the H point of the 5th percentile female using a 3D manikin. As the attached data suggests, the H point varies greatly when NHTSA's procedures or the manikin are used. NHTSA's test procedures merely say "place dummy on seat", however, even with NHTSA's procedure, we find there can be wide variations in seating positions.

In our December 23rd comment, Toyota reported that there is a 30 mm difference between the SAE and SNPRM procedures in locating the H-point position (Figures 16-1 through 16-5). However, in its preamble to this interim final rule, NHTSA said that it made little difference whether a manikin was used or not. Nevertheless, we believe that the difference found between Toyota and VRTC's methods means that a different H-point exists between the two labs. On the other hand, Toyota also observed that the standard deviation can be as much as 5 mm even when using the same dummy (figure 16-1). Therefore, it is conceivable that the amount of variations will be up to 35 mm between two labs.

We also have experienced larger variations with older dummies using the older H-II dummies' test procedure. Therefore, Toyota believes that a soft hip structure, like the one found in the dummy, should not uses to determine H-point. If NHTSA does not adopt a reliable procedure, the tests will not be repeatable from lab to lab and from test to test, especially when testing with older dummies that tend to have structures that are somewhat more compliant.

We believe that variations of up to 35 mm when positioning using this procedure, are significant enough to result in unrepeatable testing and is unacceptable for a compliance regimen. Therefore, we urge the agency to adopt the SAE seating procedure to determine H-Point.

b. 5th Percentile Female Dummy - Driver Position 2 – Chin on rim variations

As we stated in our December 23rd comments, Toyota has found that the location of the dummy's chin on the steering wheel is extremely important in the static tests with the 5th percentile female, in that widely varying results were found based on the position of the dummy's chin on the steering wheel rim. Toyota offered a proposal to position the dummy in a manner that would minimize test variability as well as unintended effects stemming from the dummies chin catching the wheel during air bag deployment. However, NHTSA's interim final rule did not address our concerns, and therefore we would like to submit them again for the agency's consideration to make the testing more objective and repeatable.

Toyota's test data (figure 17.1) shows that the AF05's neck injury values differ depending upon whether the chin hooks the rim or not. If the chin is position on the upper edge of the

rim as in S26.3.8, it may still allow the chin of the dummy to hook the steering wheel rim. This occurs because when the airbag deploys, the chest moves rearward, and the head can move slightly forward, just enough to hook the chin. The movement of the head thus varies depending upon whether the chin is held onto the steering wheel. This will result in differences in the neck extension bending moment.

It appears that NHTSA is also concerned about the chin possibly getting hooked on the steering wheel rim, since it states in S26.3.7 "Do not hook the chin over the top of the steering wheel". However, we believe it is still possible for the chin to get caught on the rim, if a consistent procedure is not followed.

In order to ensure a more repeatable test, Toyota recommends a chin placement procedure such that it contacts the top of the steering wheel rim, but decreases the likelihood of becoming hooked on the rim (figures 17.2-17.3). Therefore, Toyota recommends that the agency modify S26.3.7 to state the following:

Position the dummy so that a point 40 mm below the center of the mouth on the chin is in contact with the rim of the uppermost portion of the steering wheel. Position the chin to rest on the rim, without loading the neck.

We believe this procedure will insure repeatable and consistent test results, and urge the agency to adopt it in S23.3.7.

c. 5th Percentile Female Chest Gs

As Toyota outlined in its December 23, 1999 comments, we presently have several issues of concern with the5th percentile female, especially as they relate to belted chest Gs. The Alliance (AAM) had proposed a scaling method for the 5th percentile female which would have placed the chest G limit at 73g. However, NHTSA's interim final rule adopted 60g, which it claimed was due to concerns for elderly females. Nevertheless, a limit of 60gs poses a difficult problem when attempting to balance protection for the 5th female when designing an airbag/seatbelt system.

Toyota recommends that rather than utilizing chest G's, the agency should adopt sternal deflection rate (SDR). According to the results of the Transport Canada report (figures 18-1 and 18-2) there exists a relationship between chest injury and deflection, but not between chest injury and chest Gs. Based upon NHTSA's SCI data, chest injuries for small occupants seated closely to the driver's airbag seem to be a concern (figure 18-3), but chest G does not seem to be a problem regarding 5th percentile female low risk deployment requirements (figure 18-4). Again, this seems to show that there is no correlation between real-world data and chest G's. Therefore, it seems that SDR and deflection provide a better predictor of real-world chest injuries, rather than deflection and chest G's. However, if the agency again disagrees with Toyota's position and includes chest G's, we strongly urge the agency to adopt the Alliance's recommendation for the 5th percentile female dummy.

Additionally, Toyota is concerned that lowering the chest G limit to 60gs from the properly scaled value of 73gs may force automakers to increase the power of current airbag designs. From testing it appears that in order to lower the chest g numbers, manufacturers may be forced to lower the output of the seat belt load limiters, which would then require the the air bag to be repowered to adequately protect the 50th percentile adult male in 35-mph crash tests. As we have stated in previous comments, we believe that airbag repowering is directionally incorrect, especially OOP children and small adults in higher speed collisions.

Again, for the reasons outlined above, Toyota urges the agency to adopt the proposed 73g, vs. the 60gs found in the interim final rule.

d. 5th Percentile Female Neck Risk

Toyota continues to assert that the 5th percentile female can exhibit non-biofidelic responses in the neck region. We have found that apparent test failures can occur, but a subsequent review of the vehicle test films appears to indicate that no problem exists.

In barrier crash testing at about 23 kph without an airbag (i.e. at a speed which would mimic a crash on the high end of the no deploy/all deploy grey zone), the 5% female dummy's neck extension exceeds the IARV value. The 50th male in the same test at the same speed meets the injury criteria (figure 19). However, the incidence rates of cervical spine injury in the real-world is not significantly different between an 5% female-statured occupant and a 50% male-statured occupant (figure 20). Therefore, we believe the 5% female dummy's neck response may be inappropriately measuring an artifact of the 5% dummy, not the actual response that is related to the injuries that may be seen by a small statured female.

In addition, Toyota has experienced non-biofidelic responses of the 5% female dummy's neck. Please note that in figure 21 the dummy's head is only slightly extended rearward yet a large flexion moment is observed. Likewise, in figure 22 the dummy's head is only slightly bent forward and although the rotational angle of the head is very small, there is a large extension moment observed on the data traces. We believe these examples provide evidence of the existence of a Hybrid-III dummy neck artifact and are not representative of a biofidelic response.

To investigate these concerns further, Toyota has conducted testing to attempt to mimic the S-shaped profile of the neck we have seen in our testing, as well as the unnatural moments we have recorded. Fig. 23 shows tests that simulate similar movement of the neck. When a force is applied rearward at a spot low on the dummy's chin, we find the dummy neck will deform in an S-shape profile, and a flexion moment appears in the upper neck, while the dummy's head is bent slightly rearward.

Fig. 24 shows a different type of neck movement. Originally the injury criteria for the H-III neck was derived from neck movements that bend the entire neck in the same direction (figure 24-a), where moments appearing in the upper and lower neck are both flexion moments. Contrary to Fig.24-a, Fig.24-b shows an S-shaped movement, wherein the moments appearing in the upper and lower neck are opposite, i.e. flexion in the upper neck and extension in the lower neck.

the moments appearing in the upper and lower neck are opposite, i.e. flexion in the upper neck and extension in the lower neck.

Toyota believes that the moments resulting from an S-shape profile like that given in Fig.24-b can not be measured appropriately by the current criteria which was derived from neck bending profiles like that shown in Fig.24-a.

Finally, we find that in the field, major neck injury induced by forward bending occurs in the middle or lower part of neck. Only in the case of bending, as shown in Fig.24-a, neck moment measurements at the upper neck can predict the occurrence of neck injury in the middle or lower part of the neck.

When we compare these two types of dummy neck movement, we find the moment appearing in Fig 24-a in the lower neck is in the same direction to the moment occurring in the upper neck. However, for the S-shaped profile (fig 24-b), the upper neck moment is in the opposite direction. Moment distributions are different in these two types of bending. Accordingly, we believe it is difficult to assess injury and subsequent compliance from an upper neck moment (as measured by the dummy) that is oriented in a different direction than the lower neck (and unknown magnitude), especially when field evidence suggests that the lower neck is the primary cause of injury.

Additionally, the human neck has relaxed joints that can accommodate 15 degrees of rotation between the skull and the atlas, but the dummy does not allow for such rotation due to the rubber mounting between the neck and the head. Toyota believes such differences contribute to different moment distributions, especially when S-shaped bending occurs.

Due to these concerns with the 5% female neck, we recommend that the agency consider delaying any neck injury criteria associated with the neck extension bending moment until this issue is addressed.

e. 5th Percentile Female Dummy Testing at 35 mph

Although it is not required in this interim final rule, Toyota notes that NHTSA stated that the agency will propose adding the 5th percentile female to the high speed unbelted requirement at the same time the 50% male requirement increases to a 35 mph belted requirement. As we outlined in our SNPRM comments, until the time when technology becomes available to counterbalance the trade-offs, we do not believe the agency should attempt to add this requirement to the regulatory text.

Toyota has several issues of concern, specifically as they relate to the 5% female. In testing, Toyota has found that when the 5% female is seated fully-forward, with the higher test speeds proposed by the agency (35 mph vs. 30 mph), the dummy moves forward very quickly and the airbag does not have sufficient time to fully inflate before the dummy contacts the steering wheel, which results in the injury values exceeding the HIC and chest G

criteria (Figures 25 and 26). To mitigate this problem, a manufacturer may then choose to increase the inflator pressure to inflate the airbag more quickly, which may have two potential effects. First, the higher pressure can cause the neck injury values (Nij) and chest Gs to be exceeded, but also, the higher pressure could also exceed the OOP test criteria for the 5% female driver.

Therefore, if the manufacturer chooses the low stage for the 5% female in the fully forward position in this test, the HIC and chest Gs will be exceeded. If the manufacturer then switches to the high stage for protection, the neck and chest become a problem. Adjusting the low stage inflation pressure higher to attempt to find some compromise will then affect the OOP test requirements for the driver's side.

In addition, Toyota continues to be concerned that vehicles designed to meet a 35 mph belted test could lead to more aggressive air bags and vehicle structures, both of which could be detrimental to real-world safety. It should also be noted that although manufacturers may already be designing for good scores in the NCAP program, there is no requirement that this be the case, therefore no margin of compliance is required. However, if 35 belted testing becomes a requirement, small margins that were considered adequate for NCAP testing no longer are acceptable margins for certification. In addition, current NCAP requirements do not include neck injury criteria, which if added in a regulatory requirement become a significant challenge.

Therefore given the above concerns, Toyota believes that many issues remain that need to be studied further, especially relating to testing with the 5% female, which should be addressed in a separate rulemaking when the agency feels it is appropriate.

6. Low Risk Deployment - Data Acquisition Requirement for 300 ms

In S4.11 of the interim final rule, NHTSA specifies a 300ms-test duration for the purpose of measuring injury criteria during the low risk deployment test. However, Toyota does not believe that this duration reflects the agency's intentions as described in the preamble as follows:

"...Traditionally, we have not counted data that is recorded as a result of the dummy's head neck or torso striking the vehicle interior when the dummy is no longer engaged in the air bag. We continue to believe...that the airbag is neither responsible for these injury values nor could the air bag have prevented theses interactions with the vehicle compartment. However, we are concerned that truncating the data to the point at which the occupant is not longer engaged in the air bag is insufficiently objective for compliance purposes..."

A duration of 300 ms in many cases would allow contact of the dummy with other interior components, including the vehicle seats, doors, etc. The trajectory of the dummy after deployment of the airbag can not be precisely controlled, and therefore contact with other interior components would vary widely from test to test. However, a manufacturer may choose to run a static deployment test in a body-in-white, a sled fixture, or another laboratory type setting which may or may not have a full vehicle interior installed. Given that the

intention for the test is to test the dummy's interaction with the airbag, and not other interior components, Toyota believes that this requirement serves only to further complicate the certification problems, resulting in widely varied test results.

Toyota also conducted dynamic testing with the 6YO in position 1, to investigate the magnitude of the injury values from contact with interior components. We then compared these values to data collected from a static OOP test outlined in NHTSA's procedure, and included data from contact with interior components other than the airbag. As you can see in figures 27 and 28, the peak injury values that occur in the static test actually occurred when the dummy contacted the seat components, and is higher than the value induced by the airbag. However, in the dynamic test, which better simulates real world accidents, the injury values obtained from contact with the seat components is much lower than that found in the static tests, and is also lower than the values induced by the airbag. It follows that in a dynamic condition, the injuries induced from the airbag are the most critical, and data from other interior components is of little consequence. Therefore, we believe injury values obtained in a static test which occur from contact with interior components are meaningless and do not represent real world conditions. However, their variability and magnitude are of great concern in a compliance regimen.

Given NHTSA's intentions outlined in the preamble, and the issues we mentioned above, Toyota would urge the agency to change this requirement to require truncation of the data prior to impact of the torso, head and neck with interior components other than the airbag for calculation of the peak injury values. Therefore, we recommend that NHTSA include its NPRM language which was proposed as S22.4.2.12, S24.4.3.7, S26.4.2.11 and S26.4.3.10 as follows:

In calculation of the injury criteria as specified in paragraph S15.3, data are to be truncated prior to dummy interaction with vehicle components after the dummy's head is clear of the airbag.

7. Warning Labels

Toyota recommends that NHTSA require the current pictogram and regulatory text (except "Even with Advanced Airbag") as opposed to the one specified in the new regulatory text. As we stated in our comments to the SNPRM, Toyota strongly believes that the current level of technology for suppression systems is not perfected, therefore a graphic that no longer depicts problems with CRS interaction with the airbag may degrade overall safety. We believe it is premature to tone down the message as is depicted in the final rule.

8. Partial Compliance

Toyota appreciates NHTSA's consideration of our comments requesting partial compliance of the new requirements, specifically allowing manufacturers to immediately test with the rigid barrier in lieu of sled testing. We strongly believe that this will expand options available to manufacturers, which can incrementally improve vehicle safety, even prior to phase-in of the full requirements beginning on September 1, 2003.

It is Toyota's understanding that, for all vehicles manufactured prior to the phase-in requirements, S3(b) states that manufacturers can certify to one of the following unbelted test options:

1) 30-mph rigid barrier requirement with the 50% male using the old FMVSS 208 injury criteria; or,
2) 25-mph rigid barrier requirement with the 50% male using the new injury criteria; or,
3) sled test criteria.

However, we believe the final regulatory text is not clear, and therefore we want to confirm that the final rule indeed allows manufacturers to test new models with the 25 mph rigid barrier using only the 50% male to the new injury criterion, while not requiring the remaining test matrix (OOP, suppression, etc.) outlined by the final rule. Allowing manufacturers this option will immediately allow further design flexibility in dual stage inflation technology when compared to systems designed to the sled test, which can offer further protection to OOP children and small adults.

Fig 1. At 25 mph (Dual-stage) vs. Current (Depowered)

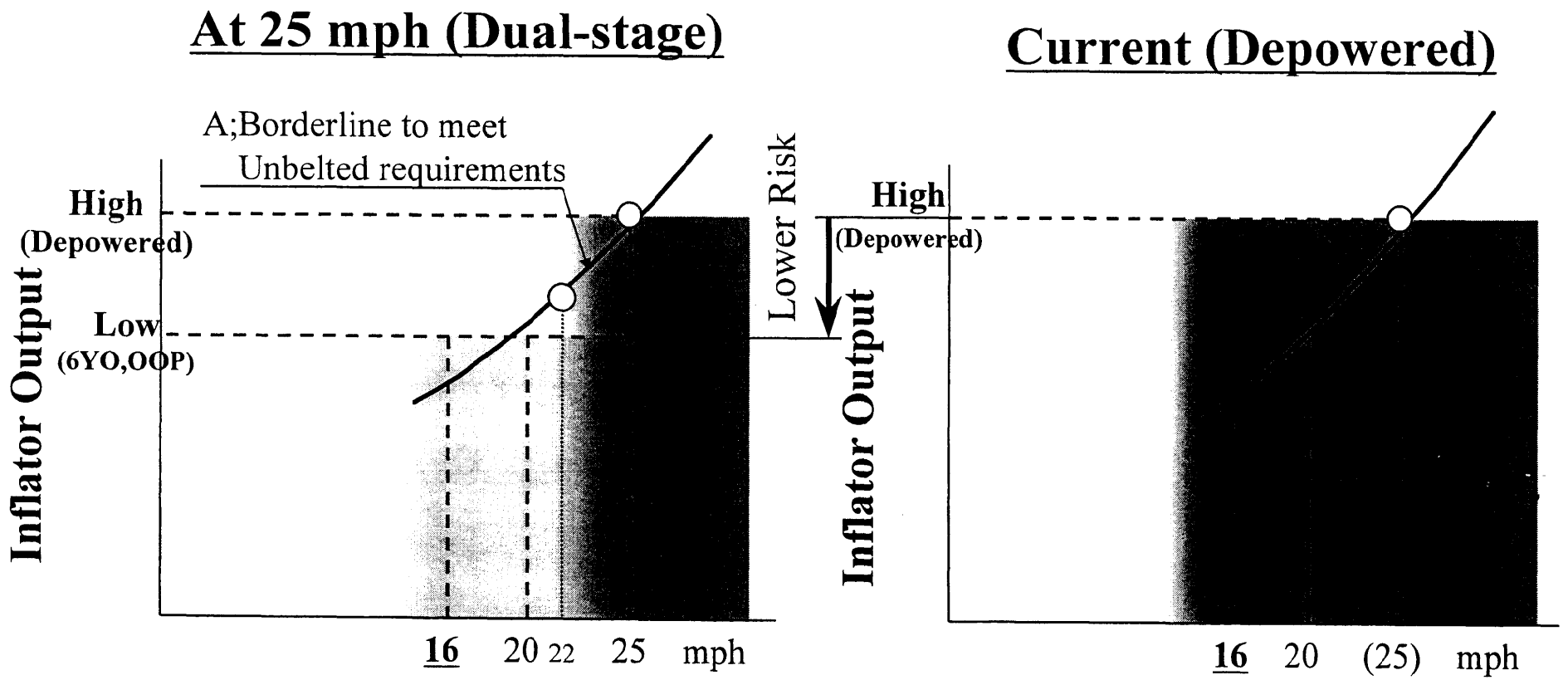

Using above concept Dual-stage Airbag can lower risk for OOP occupants at low & mid speeds compared to current Depowered bags.

Fig 2. 20~25 mph vs. At 25 mph

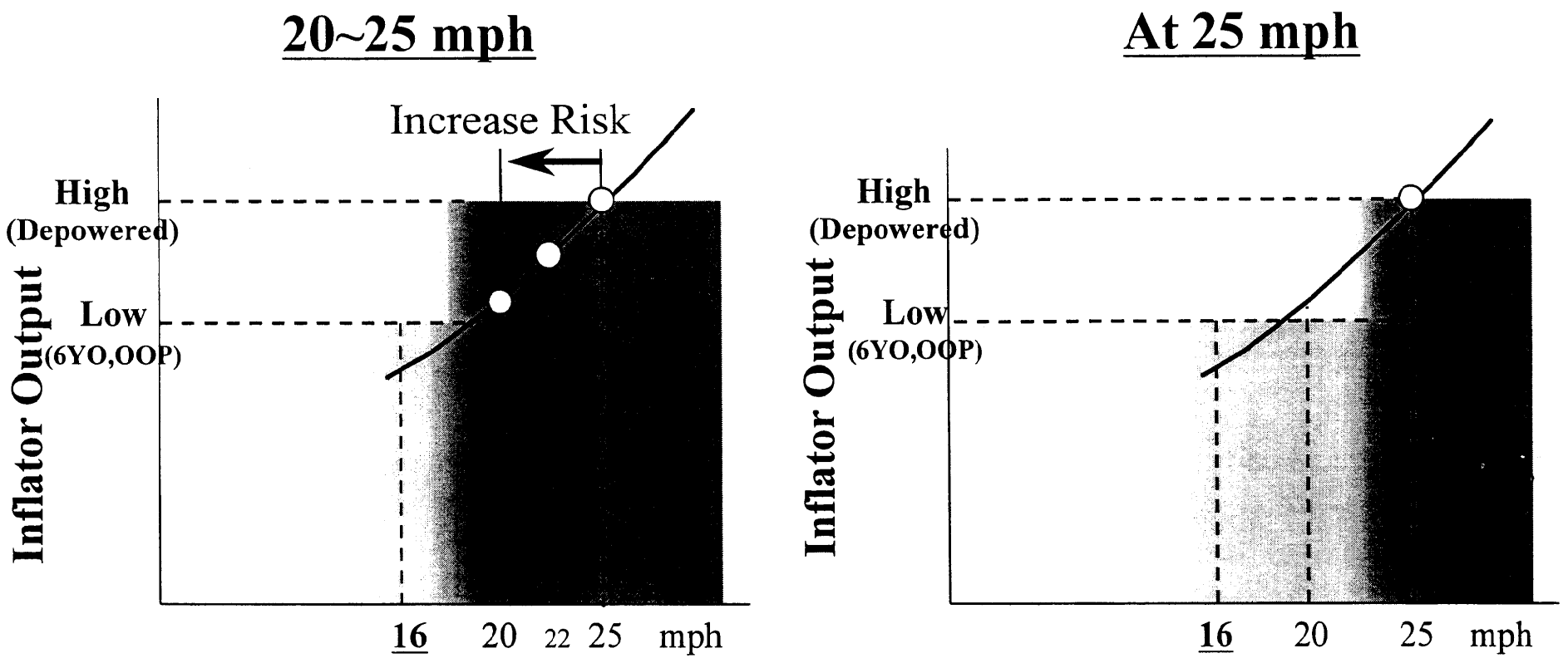

- 20~25mph requirements are inconsistent with Low-risk deployment threshold.
- Frequency of High-stage deployment will increase considerably.

Fig 3. 20～25 mph vs. At 25 mph

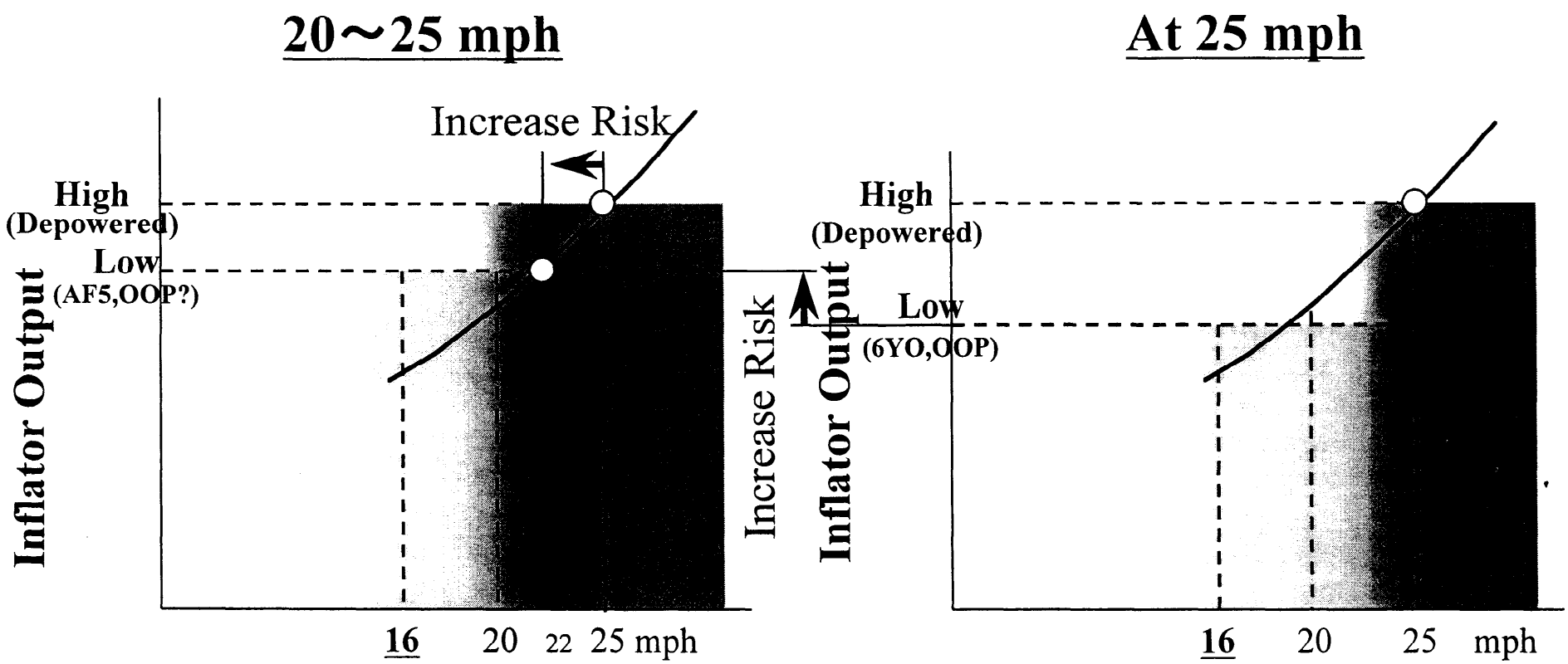

- 20～25mph requirements are inconsistent with Low-risk deployment threshold.
- Increasing Low-stage level increases risk to OOP children.
- Reducing High-stage deployment threshold increases frequency of High-stage deployment.

Fig 4. The current crash test dummy surrogates have non-humanlike seated pressure distributions and profiles.

	Small Woman	AF5 H-Ⅲ Dummy
UMTRI Validation Result	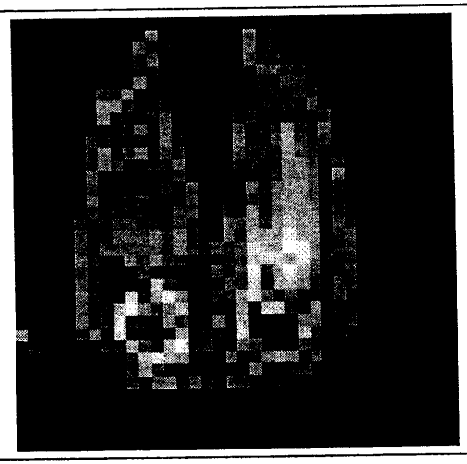	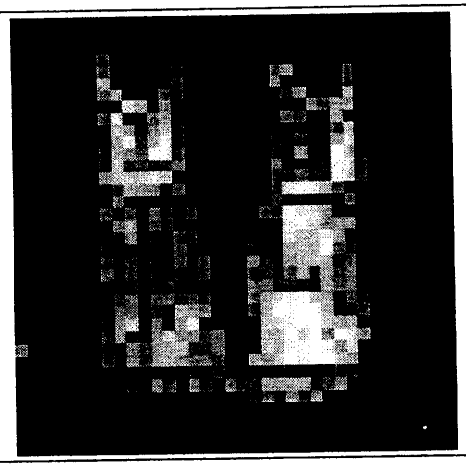
Johns Hopkins Univ. Validation Result (SAE2000-1004)	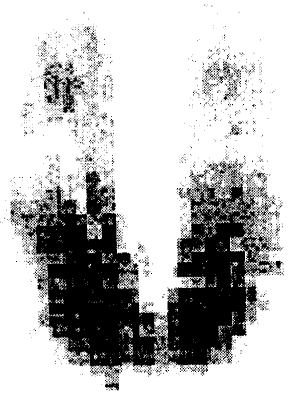	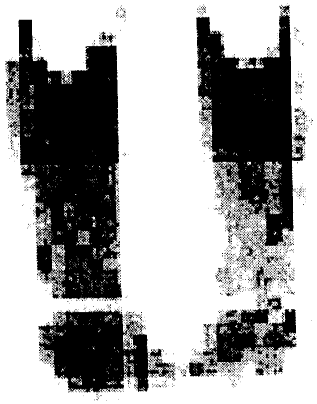

CONFIDENTIAL

Fig 5. The current crash test dummy surrogates have non-humanlike seated pressure distributions and profiles.

CONFIDENTIAL

Fig 6. The current crash test dummy surrogates have non-humanlike seated pressure distributions and profiles.

CONFIDENTIAL

Fig 7. Distinguishing between AF5 Dummy and 6yo Dummy

CONFIDENTIAL

Fig 8. Distinguishing between AF5 Human and 6yo Human

CONFIDENTIAL

Fig 9. Weight & Height of Panels (Adults & Children)

Fig 10. Car Bed : Cosco Dream Ride

Camry Passenger Seat	
Front Most	Rear Most
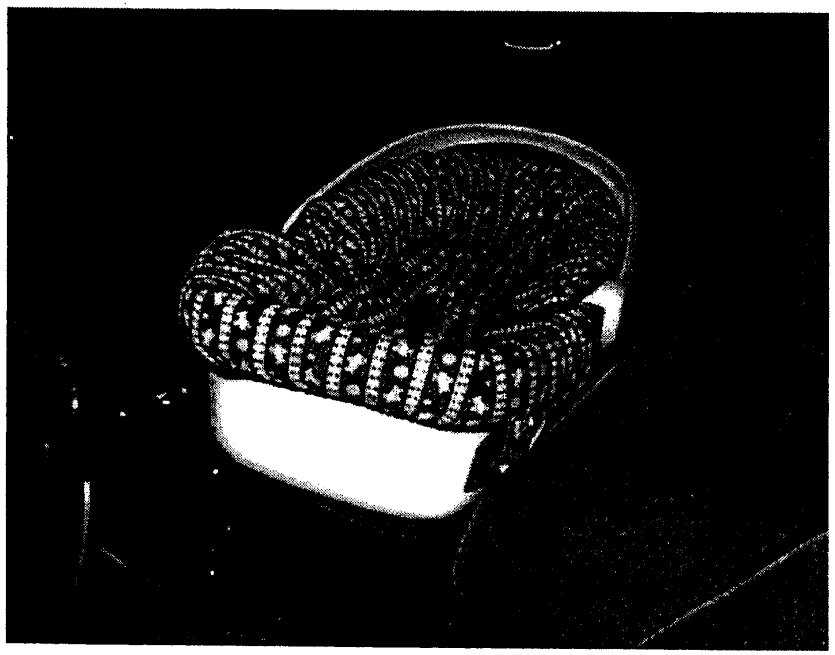	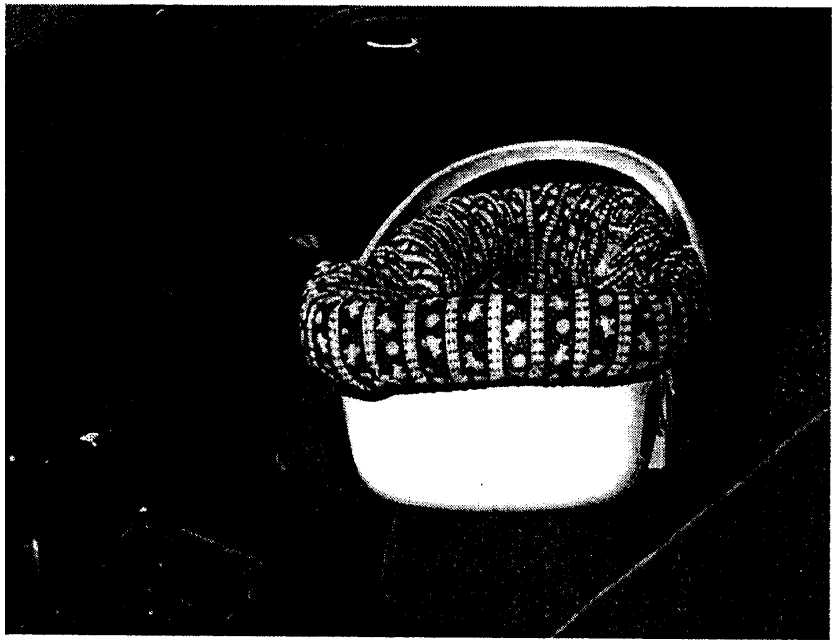

Fig 11. Cinch the vehicle belts tension

134N of belt tension is too tight, because CRS is rotated by belt tension.

67N of belt tension specified by FMVSS213 is sufficient to restrain CRS.

Belt Tension ;67N

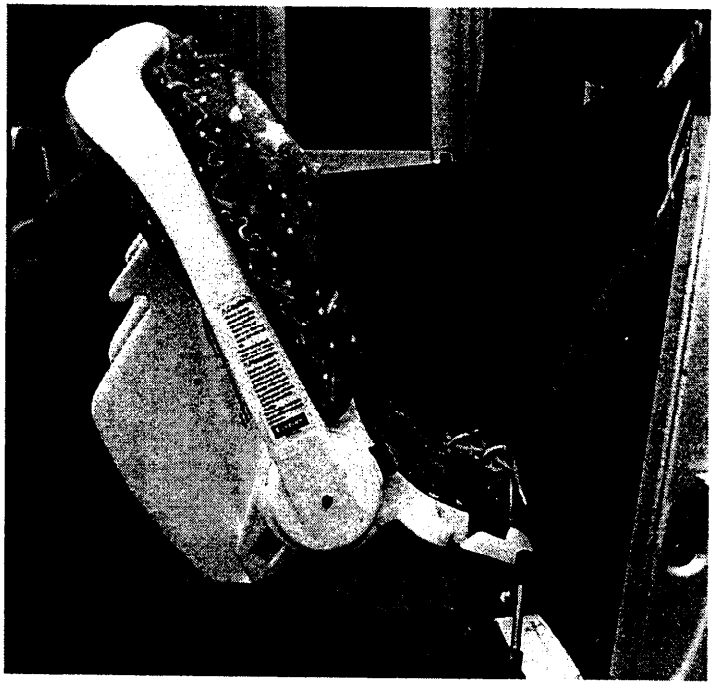

Belt Tension ;134N

Fig 12. Cinch the vehicle belts tension

134N of belt tension is too tight, because CRS is rotated by belt tension.

67N of belt tension specified by FMVSS213 is sufficient to restrain CRS.

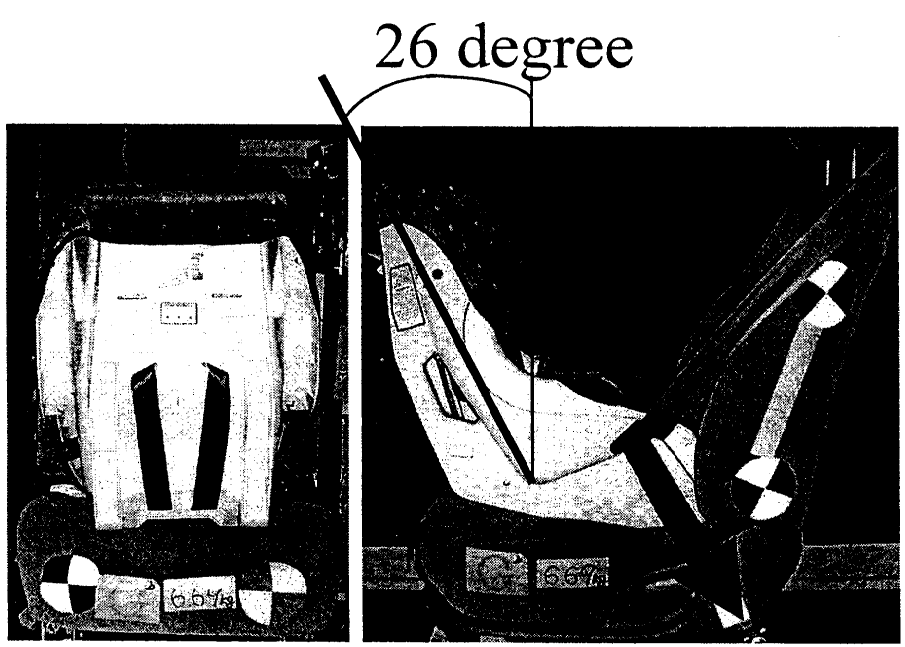

Belt Tension ;67N

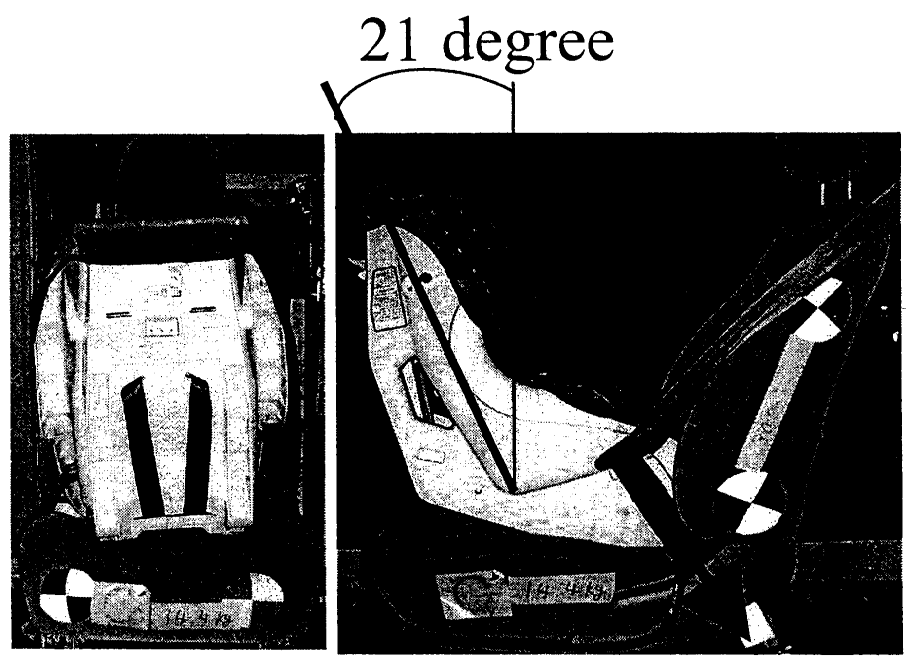

Belt Tension ;134N

Fig 13. Automatic Suppression Test Procedure

<Bucket Seat>

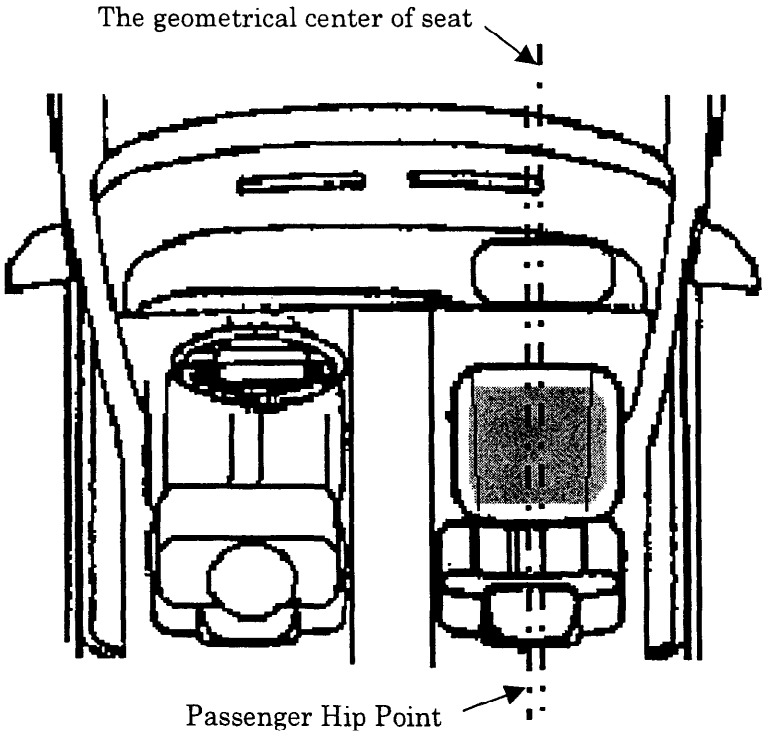

<Bench Seat>

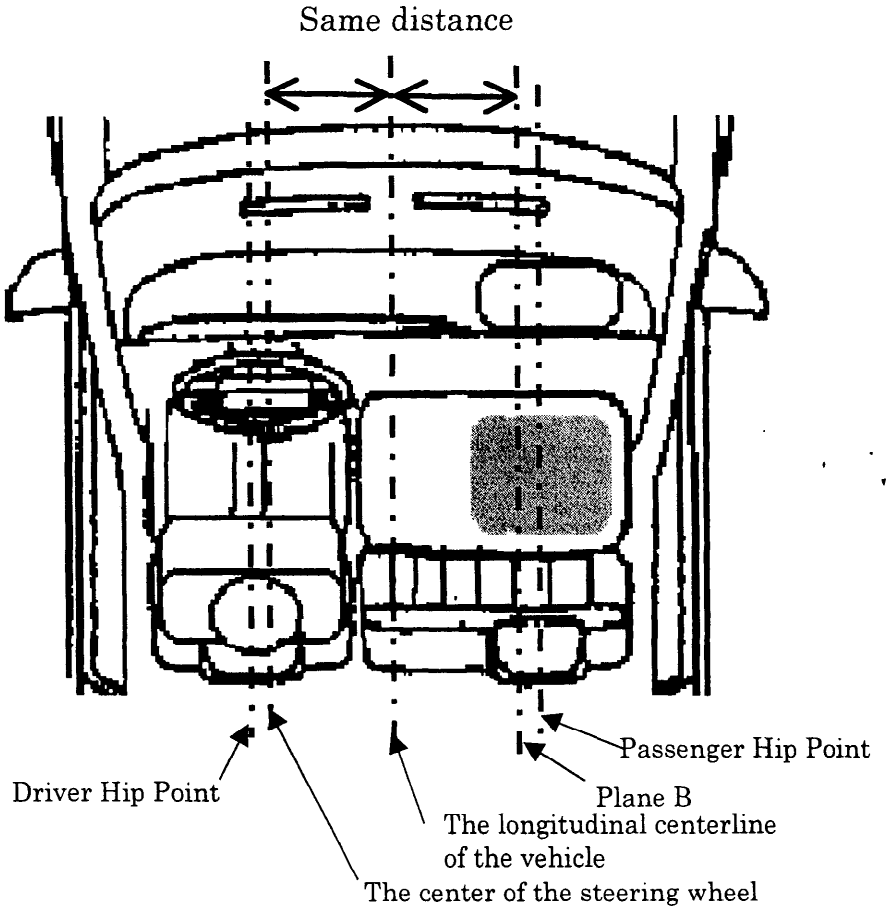

Fig 14. Driver Position 1&2

Loading of the neck

Example. Position 1

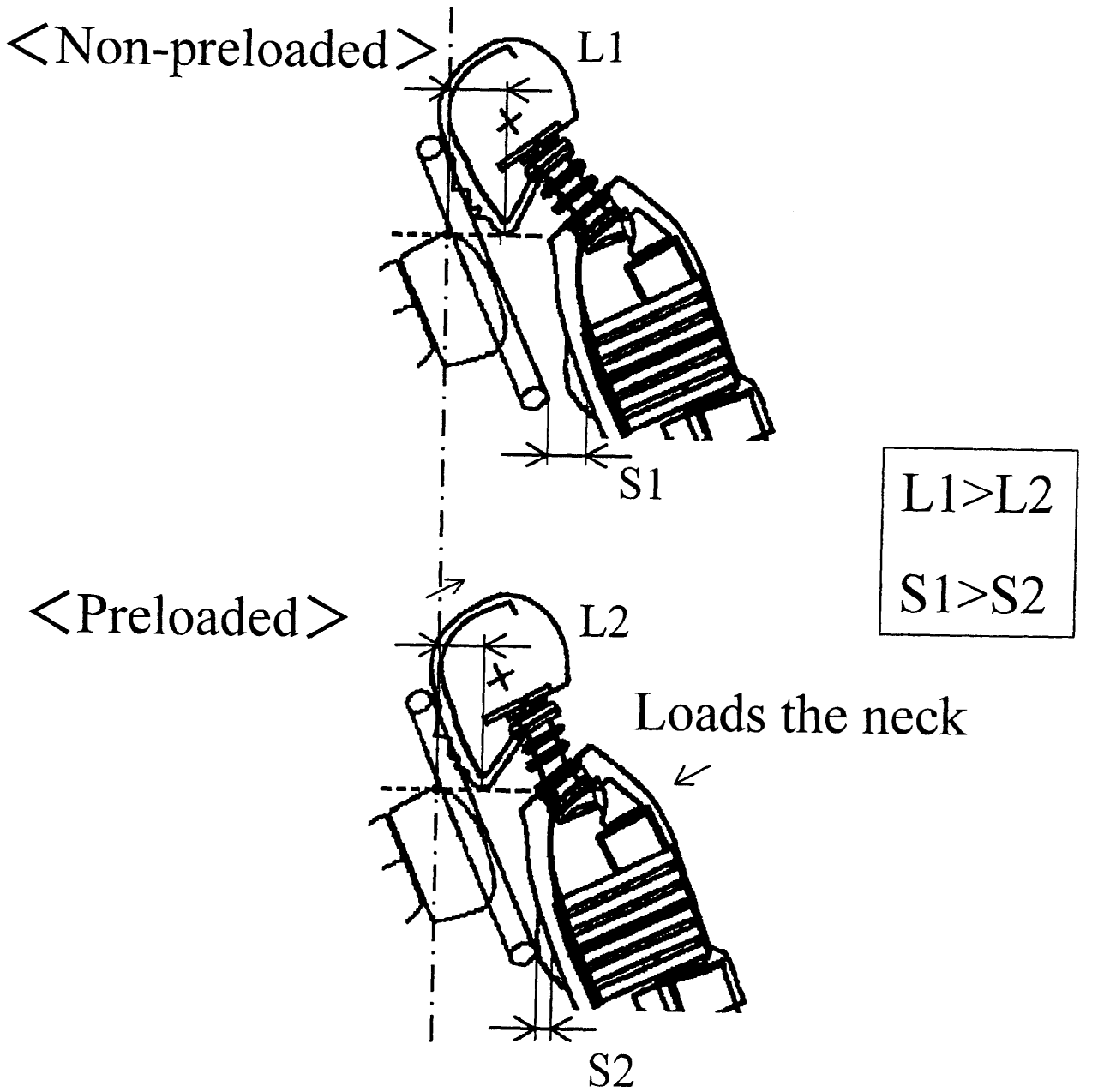

CONFIDENTIAL

Fig 15. Driver Pos.1

Fig 16-1.

Comparison of Dummy Seating Position

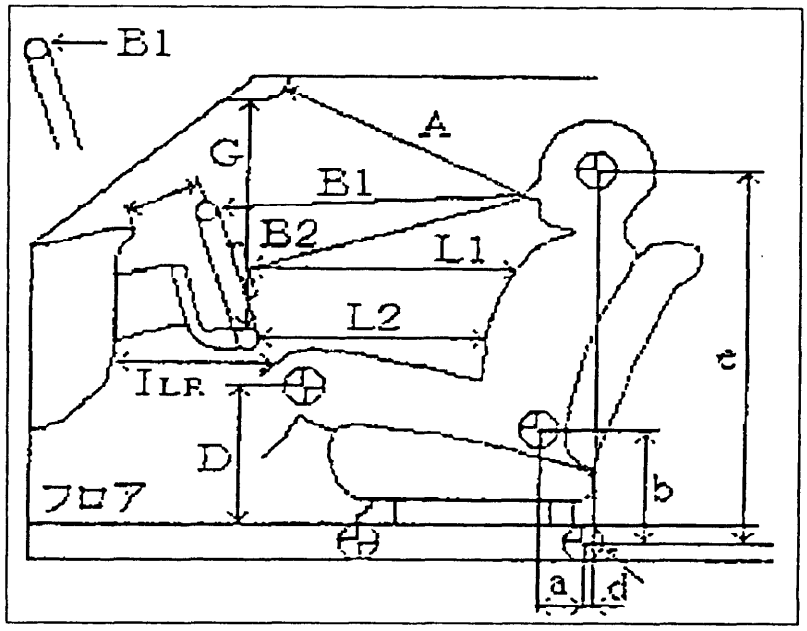

Vehicle B		L1	L2	B1	B2	IL	IR	Hpt L	Hpt H	Head L	Head H
	SNPRM 1	205	75	240	235	15	20	2242	1305	2343	1867
	SNPRM 2	215	83	267	250	15	15	2241	1305	2372	1863
	SNPRM 3	223	82	275	255	10	10	2237	1303	2379	1862
	Average	214.3	80	260.7	246.7	13.33	15	2240	1304.3	2364.7	1864
	STDEV	9.018	4.359	18.34	10.41	2.887	5	2.6458	1.1547	19.088	2.6458
	SAE	245	108	285	258	30	30	2267	1299	2389	1860
	SN-SAE	30.67	28	24.33	11.33	16.67	15	27	-5.333	24.333	-4

Vehicle C		L1	L2	B1	B2	IL	IR	Hpt L	Hpt H	Head L	Head H
	SNPRM 1	195	65	250	250	5	1	1990	1360	2108	1923
	SNPRM 2	200	63	253	253	1	1	1985	1361	2111	1923
	SNPRM 3	198	65	262	261	2	1	1984	1363	2114	1927
	Average	197.7	64.33	255	254.7	2.667	1	1986.3	1361.3	2111	1924.3
	STDEV	2.517	1.155	6.245	5.686	2.082	0	3.2146	1.5275	3	2.3094
	SAE	225	97	284	283	25	25	2021	1370	2138	1934
	SN-SAE	27.33	32.67	29	28.33	22.33	24	34.667	8.6667	27	9.6667

Vehicle D		L1	L2	B1	B2	IL	IR	Hpt L	Hpt H	Head L	Head H
	SNPRM 1	193	60	260	263	5	15	2025	1465	2150	2029
	SNPRM 2	186	53	248	257	10	10	2021	1467	2138	2030
	SNPRM 3	173	50	233	242	5	7	2015	1464	2123	2027
	Average	184	54.33	247	254	6.667	10.67	2020.3	1465.3	2137	2028.7
	STDEV	10.15	5.132	13.53	10.82	2.887	4.041	5.0332	1.5275	13.528	1.5275
	SAE	217	86	265	265	35	40	2047	1464	2156	2027
	SN-SAE	33	31.67	18	11	28.33	29.33	26.667	-1.333	19	-1.6667

Seating position based on SNPRM is forward about 30mm further than that of SAE seating procedure.

Fig 16-2.

Comparison of Dummy Seating Position

		Hpt L	Hpt H			Hpt L	Hpt H
Vehicle B	SNPRM 1	2242	1305		3DM Manikin 1	2269	1316
	SNPRM 2	2241	1305		3DM Manikin 2	2269	1313
	SNPRM 3	2237	1303		3DM Manikin 3	2272	1312
	Average	2240	1304.333			2270	1313.667
	STDEV	2.645751	1.154701			1.732051	2.081666

		Hpt L	Hpt H			Hpt L	Hpt H
Vehicle C	SNPRM 1	1990	1360		3DM Manikin 1	2030	1370
	SNPRM 2	1985	1361		3DM Manikin 2	2026	1371
	SNPRM 3	1984	1363		3DM Manikin 3	2025	1373
	Average	1986.333	1361.333			2027	1371.333
	STDEV	3.21455	1.527525			2.645751	1.527525

		Hpt L	Hpt H			Hpt L	Hpt H
Vehicle D	SNPRM 1	2025	1465		3DM Manikin 1	2065	1475
	SNPRM 2	2021	1467		3DM Manikin 2	2064	1475
	SNPRM 3	2015	1464		3DM Manikin 3	2061	1474
	Average	2020.333	1465.333			2063.333	1474.667
	STDEV	5.033223	1.527525			2.081666	0.57735

Deviation of SNPRM hip position is wider than that for the 3DM manikin.

Fig 16-3. FMVSS208 AF05 Seat Position

< Vehicle B >

SAE

SNPRM

Fig 16-4. FMVSS208 AF05 Seat Position
< Vehicle C >

SAE

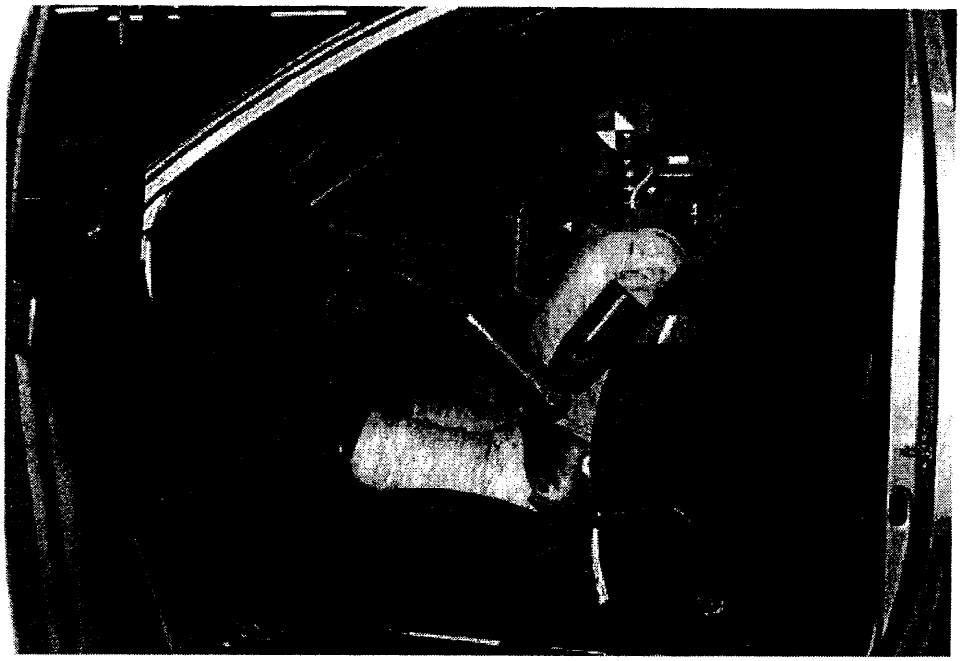

SNPRM

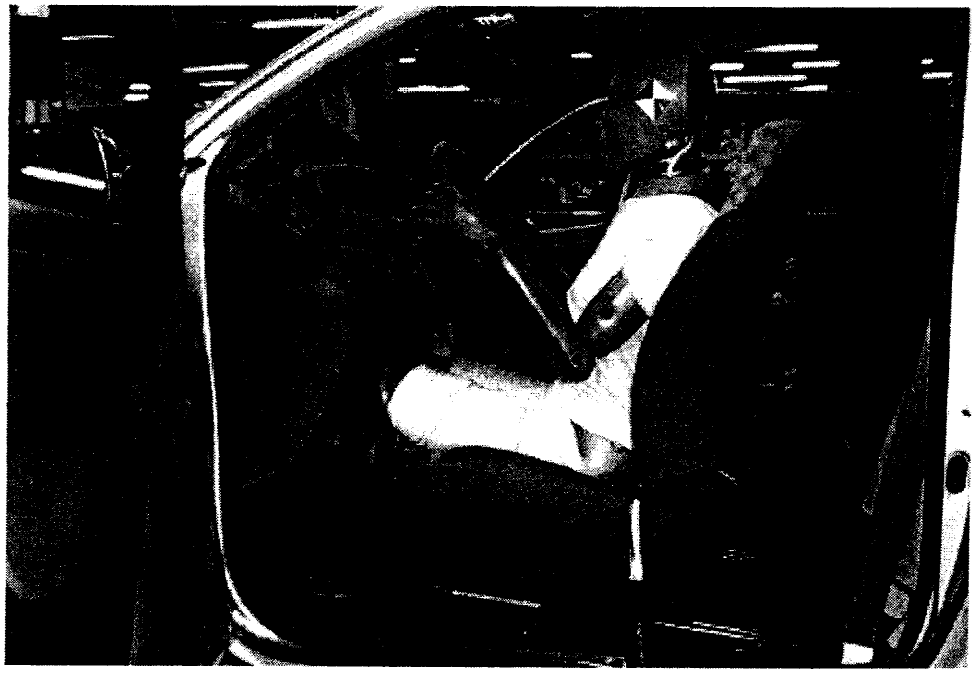

Fig 16-5. FMVSS208 AF05 Seat Position

< Vehicle D >

SAE

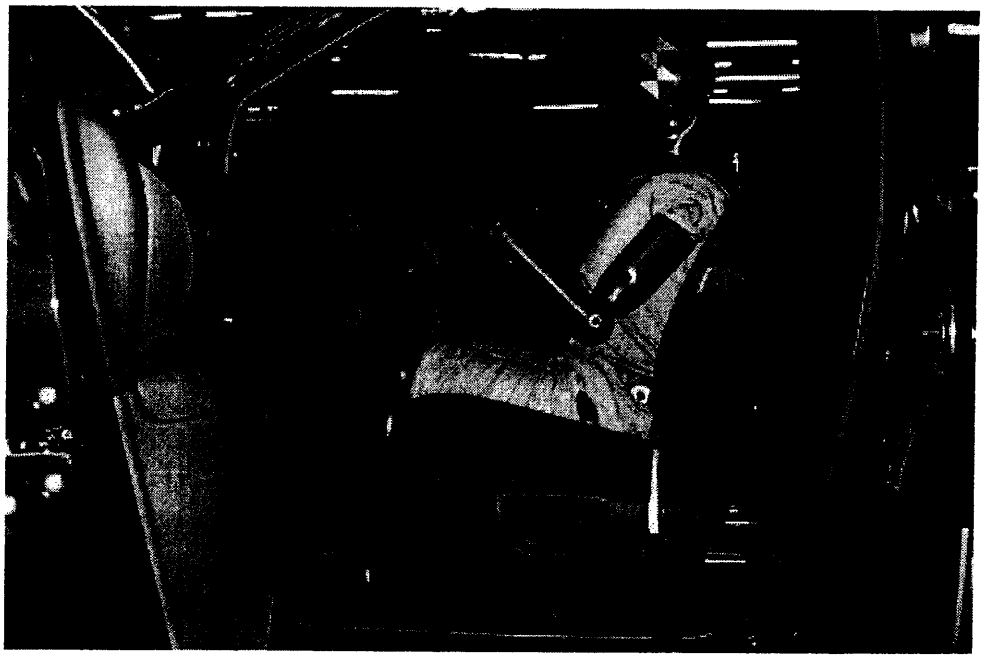

SNPRM

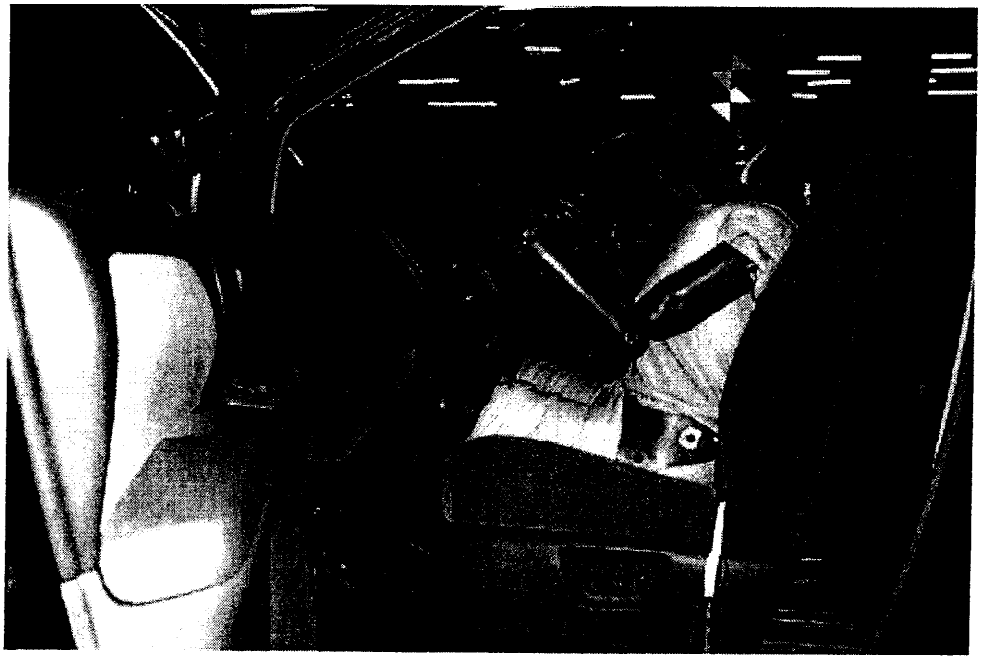

CONFIDENTIAL

Fig 17-1. TEST RESULTS of difference between conditions

Fig 17-2. Toyota recommendation - Position 2

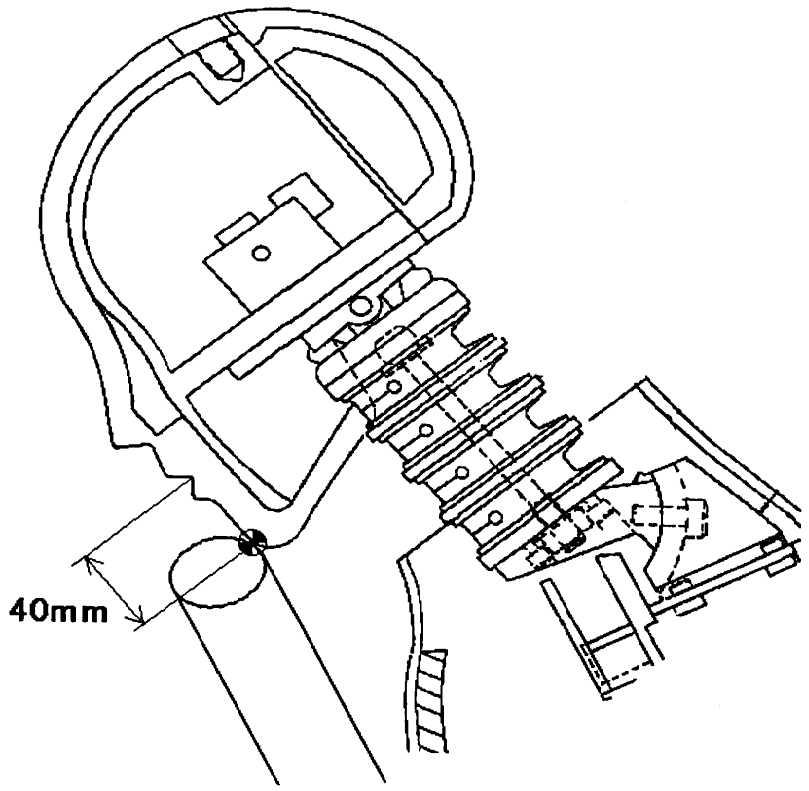

A point 40mm below the center of the mouth on the chin.

Fig 17-3.
Toyota recommendation - Position 2

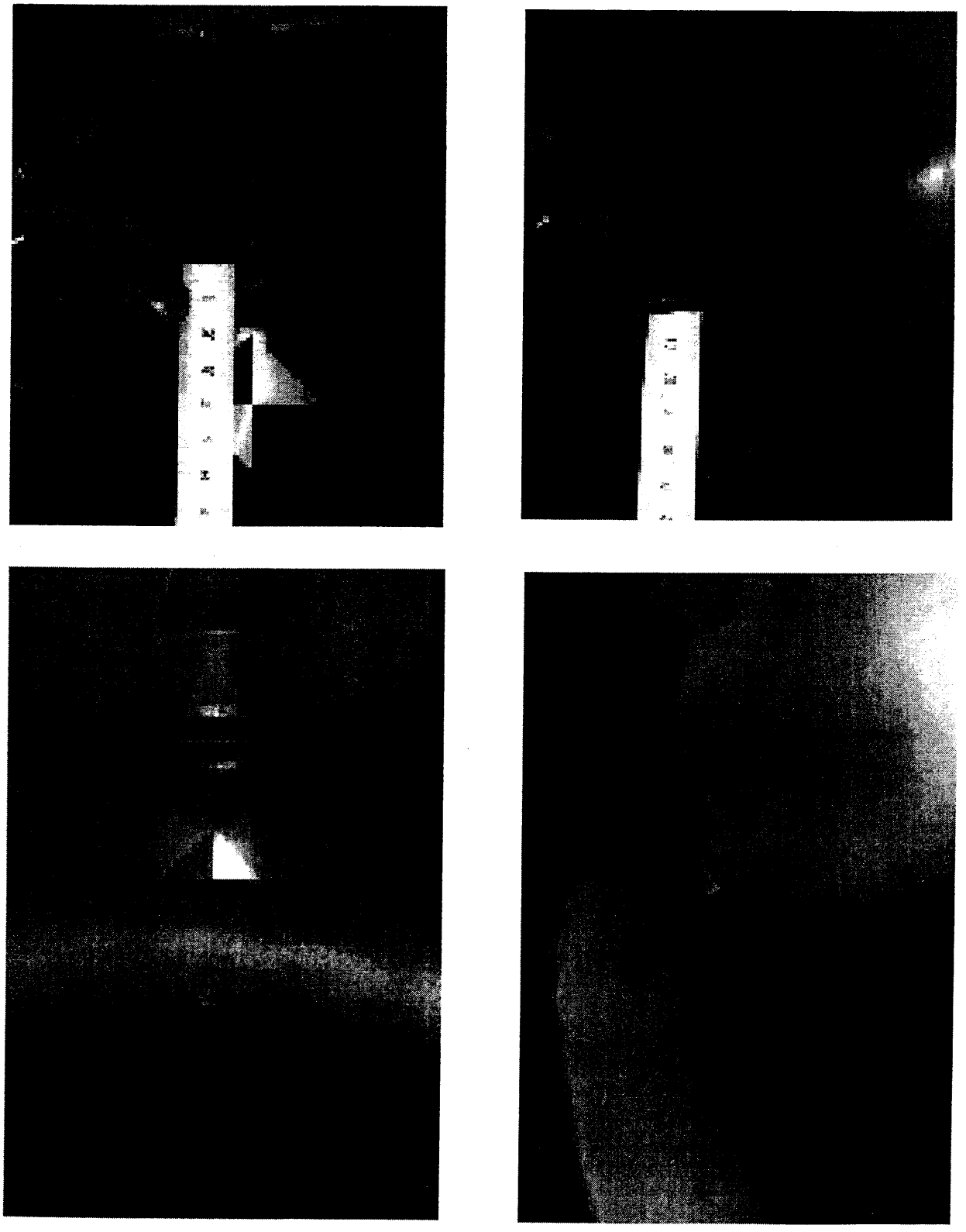

Fig 18-1. Chest Injury Rate

(Field Accident Data)

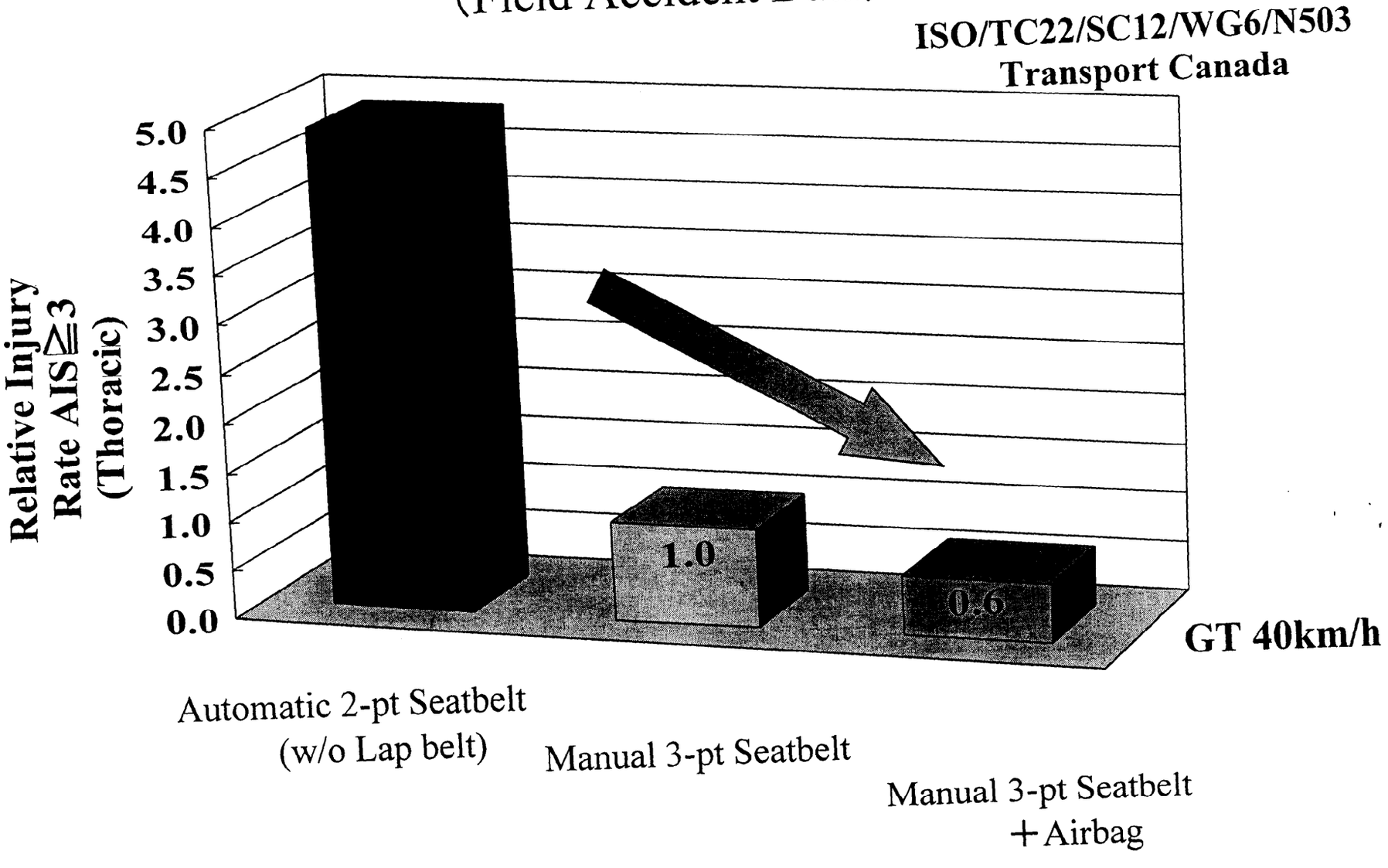

Fig 18-2. Chest Injury Index
(Test Results)

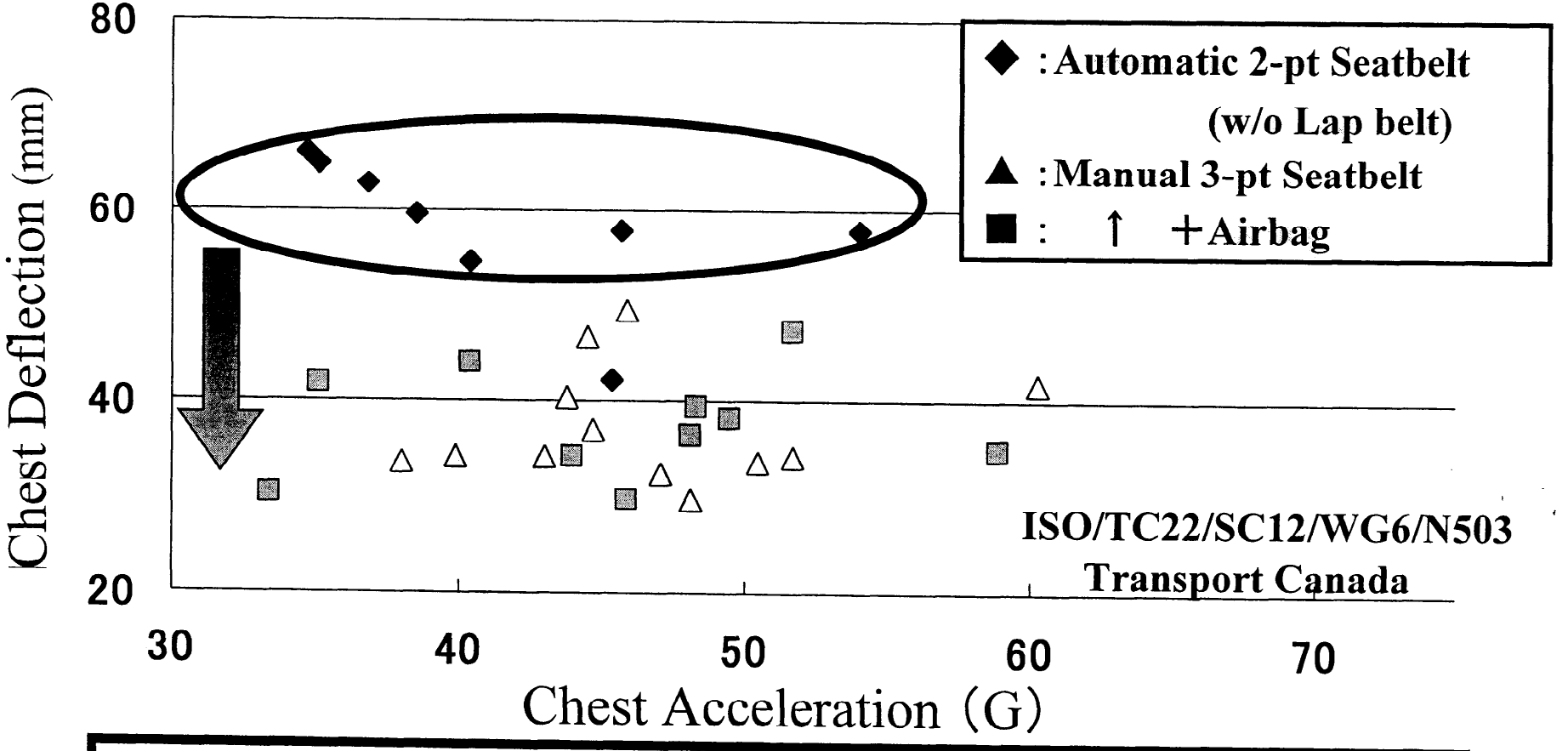

There is correlation between chest injury and chest deflection but not chest injury and acceleration.

Fig 18-3. Small Drivers who sustained fatal Injury
(less than height of 65in.) —NHTSA SCI—

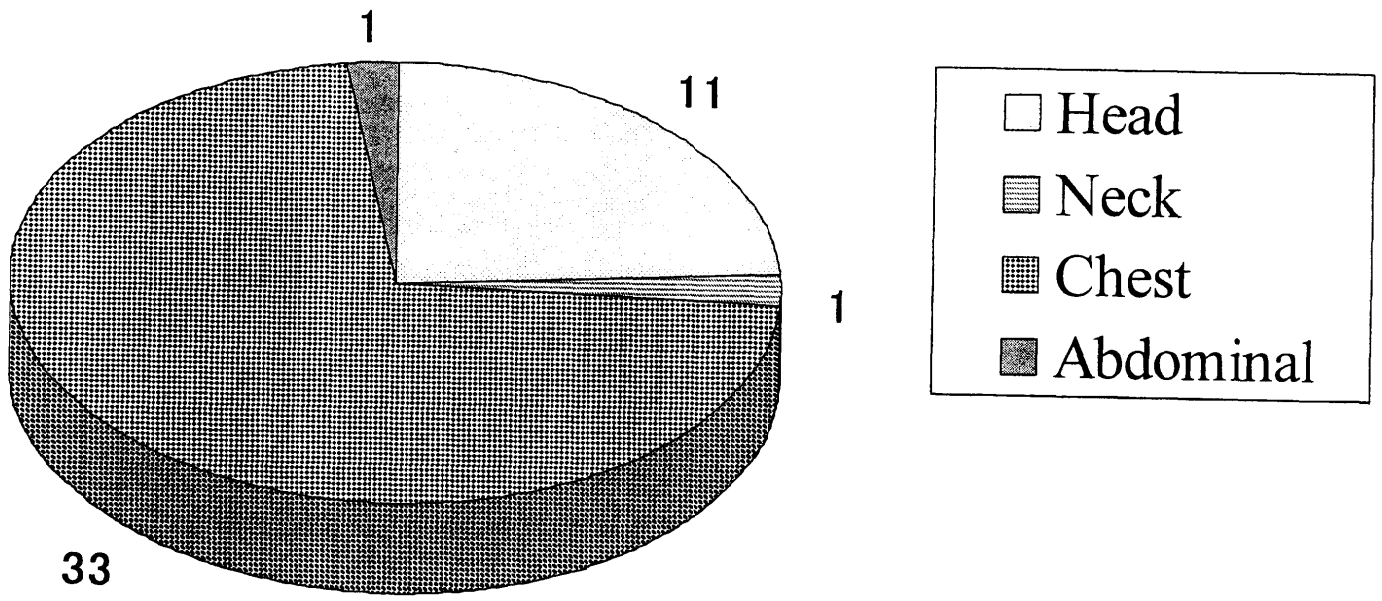

CONFIDENTIAL

Fig 18-4. Driver side AF5%ile Static OOP

CONFIDENTIAL

Fig 19. Unbelted Passenger Non-Deployment Injury (23km/h)

Fig 20. Incidence of Neck Injury

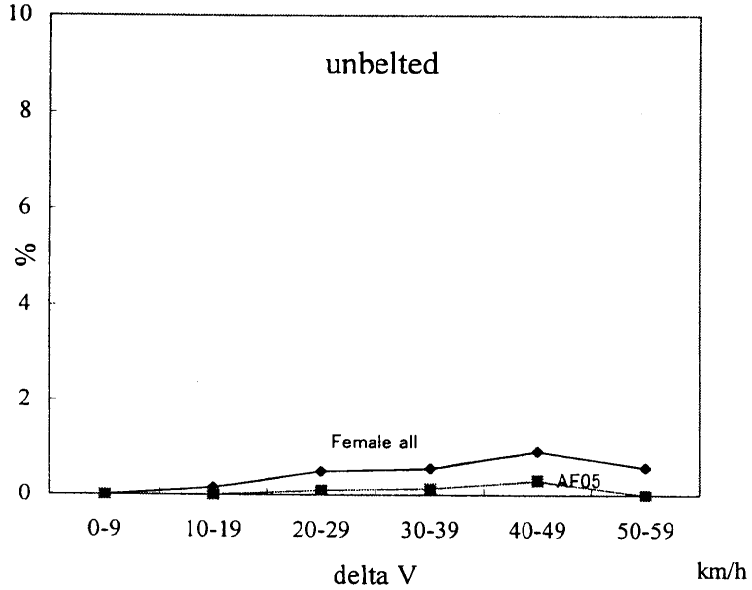

Fig 1. Distribution of Cervical Spine Injury (Driver/Female)

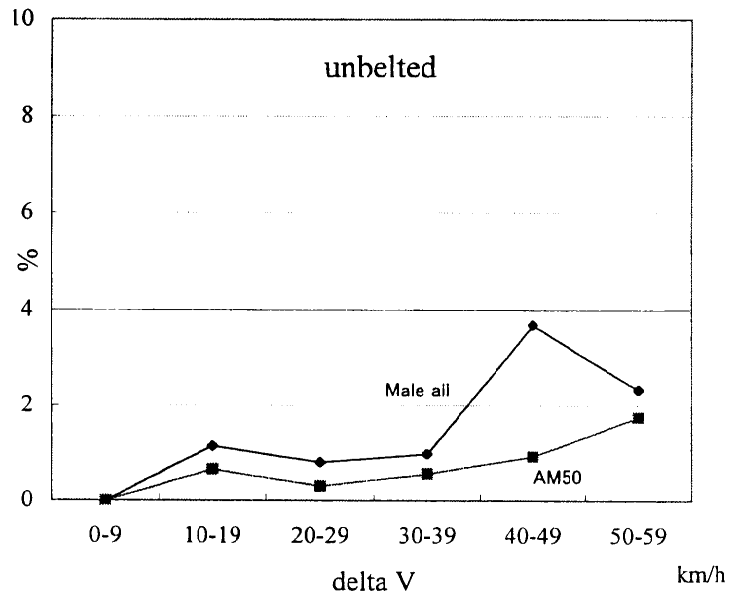

Fig 2. Distribution of Cervical Spine Injury (Driver/Male)

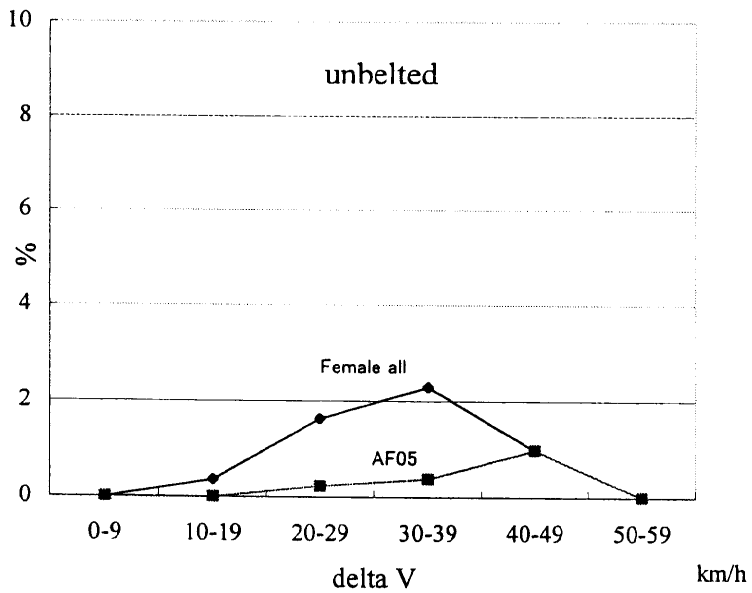

Fig 3. Distribution of Cervical Spine Injury (Passenger/Female)

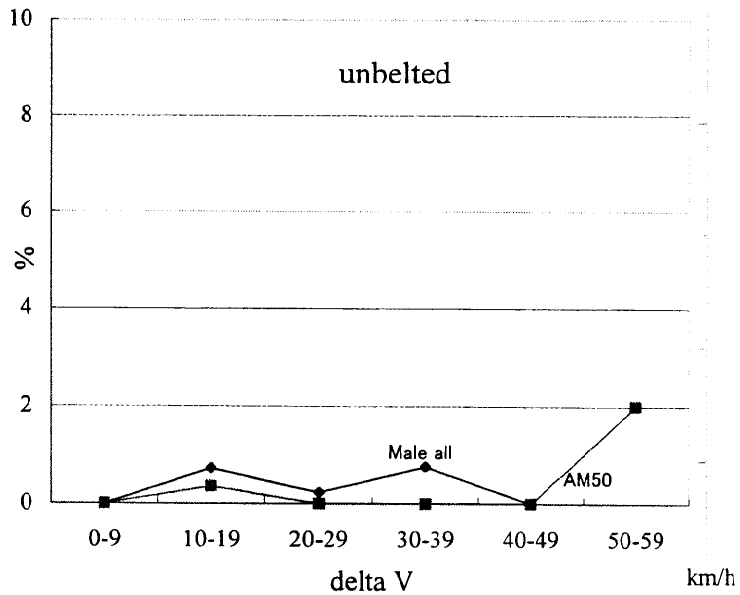

Fig 4. Distribution of Cervical Spine Injury (Passenger/Male)

CONFIDENTIAL

Fig 21. Problem with Dummy's Neck

CONFIDENTIAL

Fig 22. Problem with Dummy's Neck

Fig 23. Test of pulling chin rearward

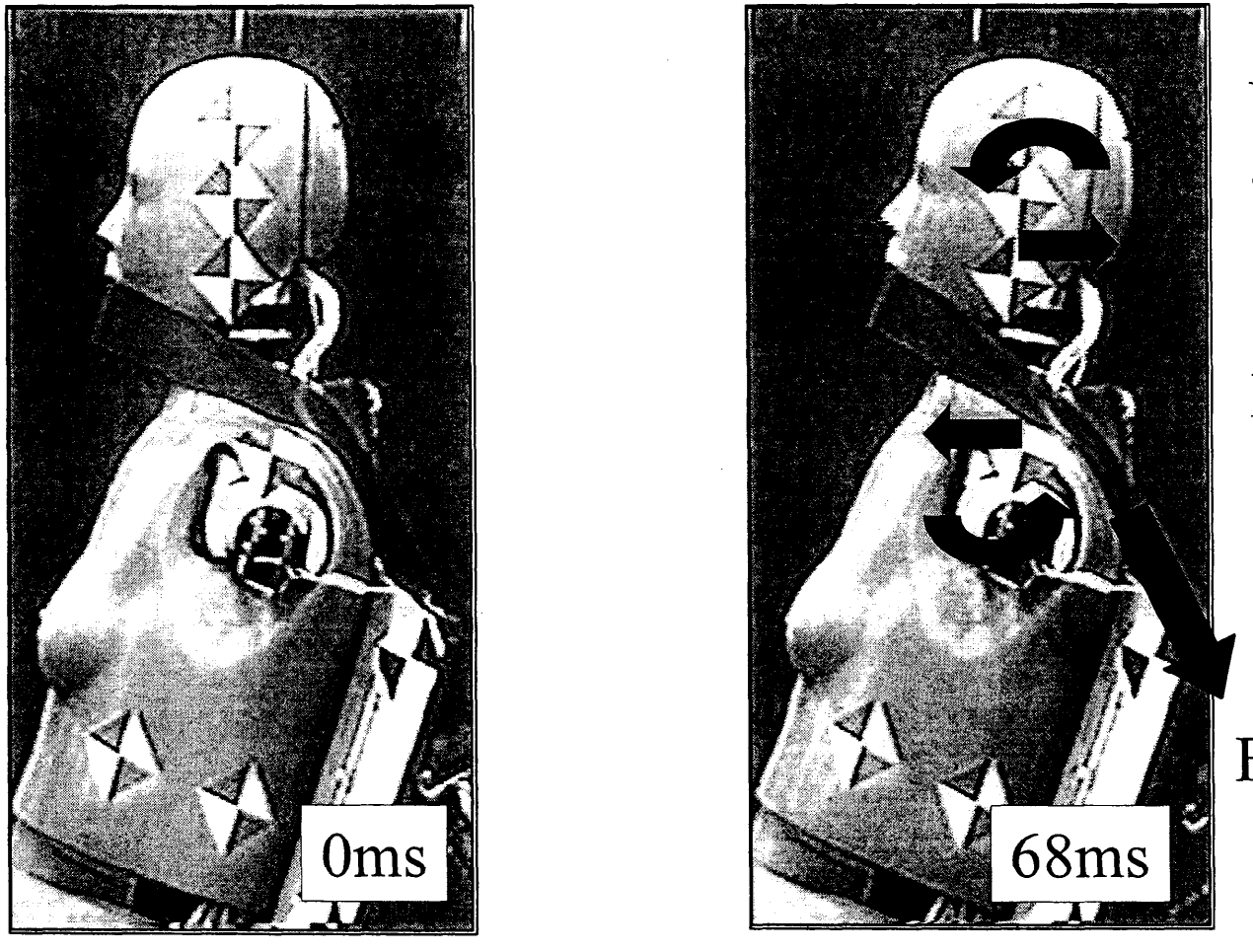

Upper Neck
→Flexion M

Lower Neck
→Extension M

F=max 440N

S-shape of neck is simulated by pulling the belt as above.
This response is similar to that in a dynamic unbelted test.

Fig 24. Upper Neck Flexion Moment

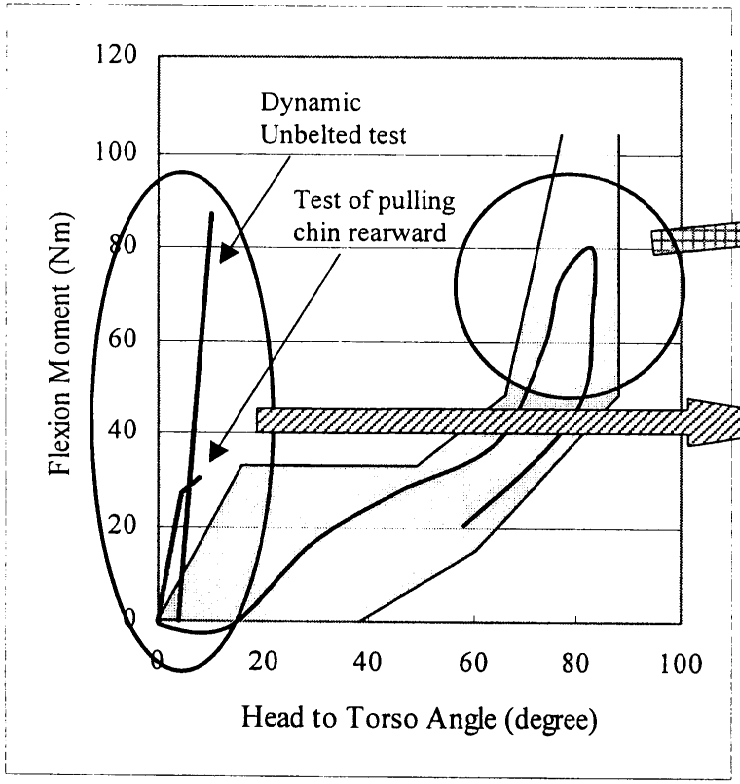

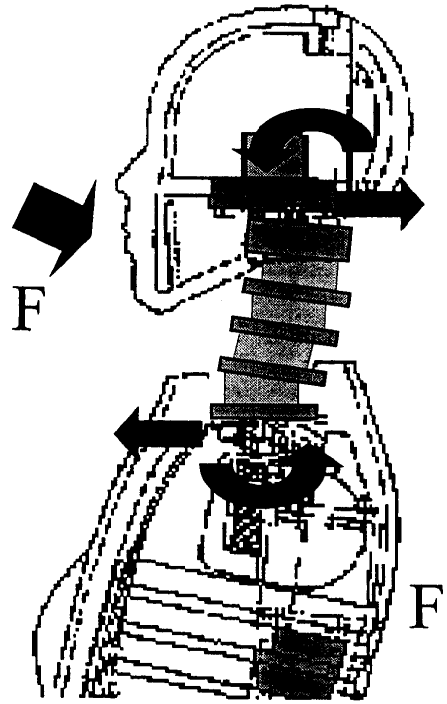

Fig 24-b

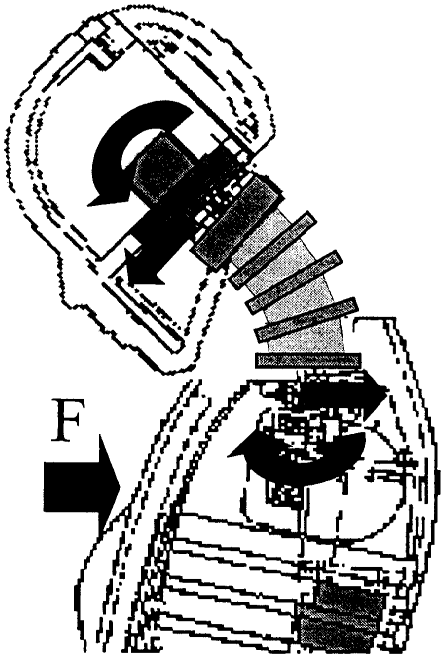

Fig 24-a

Hybrid Ⅲ dummy's neck isn't designed for the neck response shown Fig 24-b.

CONFIDENTIAL

Fig 25. AF5%ile 35mph FRB Belted

CONFIDENTIAL

Fig 26. AF5%ile 35mph FRB Belted

CONFIDENTIAL

Fig 27. STATIC VS DYNAMIC

CONFIDENTIAL

Fig 28. STATIC VS DYNAMIC OOP (Pass)