highway and transit vehicle emissions. EPA is proposing to utilize the on-road mobile emissions provided in the 15 percent plan SIP submittals as the motor vehicle emission budgets for transportation conformity purposes. The 1996 projected on-road mobile emission estimates contained within the State's 15 percent plans are shown in the following table:

TABLE 3.—1996 MOTOR VEHICLE EMISSION BUDGETS

	Por-Dov-Roc area	NH portion of Bos-Law-Wor area
VOC	12.1	18.0
NO_x	17.2	24.1

EPA is soliciting public comments on the issues discussed in this proposal or on other relevant matters, These comments will be considered before EPA takes final action. Interested parties may participate in the Federal rulemaking procedure by submitting written comments to the EPA regional office listed in the **ADDRESSES** section of this action.

Nothing in this action should be construed as permitting or allowing or establishing a precedent for any future request for revision to any SIP. Each request for revision to the SIP shall be considered separately in light of specific technical, economic, and environmental factors, in relation to relevant statutory and regulatory requirements.

IV. Administrative Requirements

A. Executive Order 12866

This action has been classified as a Table 3 action for signature by the Regional Administrator under the procedures published in the **Federal Register** on January 19, 1989 (54 FR 2214–2225), as revised by a July 10, 1995 memorandum from Mary Nichols, Assistant Administrator for Air and Radiation. The Office of Management and Budget (OMB) has exempted this regulatory action from review under Executive Order 12866.

B. Regulatory Flexibility Act

Under the Regulatory Flexibility Act, 5 U.S.C. § 600 *et* seq., EPA must prepare a regulatory flexibility analysis assessing the impact of any proposed or final rule on small entities. 5 U.S.C. §§ 603 and 604. Alternatively, EPA may certify that the rule will not have a significant impact on a substantial number of small entities. Small entities include small businesses, small not-for-profit enterprises, and government entities with jurisdiction over populations of less than 50,000.

SIP approvals under section 110 and subchapter I, part D of the Clean Air Act do not create any new requirements but simply approve requirements that the State is already imposing. Therefore, because the Federal SIP approval does not impose any new requirements, the Administrator certifies that it does not have a significant impact on any small entities affected. Moreover, due to the nature of the Federal-State relationship under the CAA, preparation of a flexibility analysis would constitute Federal inquiry into the economic reasonableness of state action. The Clean Air Act forbids EPA to base its actions concerning SIPs on such grounds. ***Union Electric Co.*** v. ***U.S. EPA,*** 427 U.S. 246, 255–66 (1976); 42 U.S.C. 7410(a)(2).

C. Unfunded Mandates

Under Sections 202 of the Unfunded Mandates Reform Act of 1995 ("Unfunded Mandates Act"), signed into law on March 22, 1995, EPA must prepare a budgetary impact statement to accompany any proposed or final rule that includes a Federal mandate that may result in estimated costs to State, local, or tribal governments in the aggregate; or to the private sector, of $100 million or more. Under Section 205, EPA must select the most cost-effective and least burdensome alternative that achieves the objectives of the rule and is consistent with statutory requirements. Section 203 requires EPA to establish a plan for informing and advising any small governments that may be significantly or uniquely impacted by the rule.

EPA has determined that the approval action proposed does not include a Federal mandate that may result in estimated costs of $100 million or more to either State, local, or tribal governments in the aggregate, or to the private sector. This Federal action approves pre-existing requirements under State or local law, and imposes no new requirements. Accordingly, no additional costs to State, local, or tribal governments, or to the private sector, result from this action.

List of Subjects in 40 CFR Part 52

Environmental protection, Air pollution control, Hydrocarbons, Reporting and recordkeeping, Nitrogen oxides, Ozone, Volatile organic compounds.

Authority: 42 U.S.C. 7401–7671–q.

Dated: September 29, 1997.

John P. DeVillars,

Regional Administrator, Region I.

[FR Doc. 97–28370 Filed 10–24–97; 8:45 am]

BILLING CODE 6560–50–P

DEPARTMENT OF TRANSPORTATION

Coast Guard USCG-99-6224-101

46 CFR Parts 10 and 15

[CGD 94–055]

RIN 2115–AF23

Licensing and Manning for Officers of Towing Vessels

AGENCY: Coast Guard, DOT.

ACTION: Supplemental notice of proposed rulemaking.

SUMMARY: The Coast Guard revises the notice of proposed rulemaking (NPRM) published on June 19, 1996, proposing requirements for licensing mariners who operate towing vessels, inspected as well as uninspected. This supplemental notice of proposed rulemaking (SNPRM) addresses the numerous comments received in response to the NPRM. It should improve the clarify those requirement proposed in the NPRM.

DATES: Comments must reach the Coast Guard on or before February 24, 1998. Comments sent to the Office of Management and Budget (OMB) on collection of information must reach OMB on or before December 26, 1997.

ADDRESSES: You may mail comments to the Executive Secretary, Marine Safety Council (G–LRA/3406) (CGD 94–055), U.S. Coast Guard Headquarters, 2100 Second Street SW., Washington, DC 20593–0001, or deliver them to room 3406 at the same address between 9:30 a.m. and 2 p.m., Monday through Friday, except Federal holidays. The telephone number is 202–267–1477. You must also mail comments to collection of information to the Office of Information and Regulatory Affairs, Office of Management and Budget, 725 17th Street NW., Washington, DC 20503, ATTN: Desk Officer, U.S. Coast Guard.

The Executive Secretary maintains the public docket for this rulemaking. Comments, and documents as indicated in this preamble, will become part of the docket and will be available for inspection or copying at room 3406, U.S. Coast Guard Headquarters, between 9:30 a.m. and 2 p.m., Monday through Friday, except Federal holidays.

FOR FURTHER INFORMATION CONTACT: LCDR Don Darcy, Office of Operating and Environmental Standards (G–MSO), (202) 267–0221.

SUPPLEMENTARY INFORMATION:

Request for Comments

The Coast Guard encourages interested persons to participate in this rulemaking by submitting written data, views, or arguments. Persons submitting comments should include their names and addresses, identify this rulemaking (CGD 94–055) and the specific section of this document to which each comment applies, and give the reason for each comment. Please submit two copies of all comments and attachments in an unbound format, no longer than 8½ by 11 inches, suitable for copying and electronic filing. Persons wanting acknowledgment of receipt of comments should enclose stamped, self-addressed postcards or envelopes.

The Coast Guard will consider all comments received during the comment period. It may change this proposal in view of the comments.

The Coast Guard plans to hold public meetings regarding this proposed rulemaking before the close of the comment period. It will hold these meetings for the purpose of receiving oral opinions and presentations on the proposed changes. It will announce the dates, times, and places of the public meetings in a late notice in the **Federal Register.** Persons may request additional public meetings by writing to the Marine Safety Council at the address under **ADDRESSES.** The request should include the reasons why an additional public meeting would be beneficial. If it determines that an additional opportunity for oral presentations will aid this rulemaking, the Coast Guard will hold another public meeting at a time and place to be announced by a later notice in the **Federal Register.**

Background and Purpose

On June 19, 1996, the Coast Guard published an NPRM in the **Federal Register** (61 FR 31332). The NPRM proposed updates to the licensing, training, and qualifications of operators of towing vessels in order to reduce marine casualties. A more detailed treatment of the following matters appear in the preamble to the NPRM.

Development of the NPRM was an essential part of a comprehensive initiative undertaken by the Coast Guard to improve navigational safety for towing vessels. It followed a Coast Guard report directed by the Secretary of Transportation, entitled "Review of Marine Safety Issues Related to Uninspected Towing Vessels" ("the Review"), which identified improvement in licensing, training, and qualifications of operators of uninspected towing vessels (OUTVs) necessary to achieve improved safety.

As stated in the NPRM, the Secretary of Transportation initiated the Review after the allision in September, 1993, of a towing vessel and its barges with a railroad bridge near Mobile, Alabama ("Amtrak casualty"). The National Transportation Safety Board (NTSB) attributed this casualty, at least in part, to the Coast Guard's failure to establish higher standards for the licensing of inland operators of towing vessels. The Review, a previous study conducted by the Coast Guard entitled "Licensing 2000 and Beyond" ("Licensing 2000"), and other research concluded that the requirements for licensing all operators of towing vessels were outdated and needed improvement on the licensing, training, and qualifications of personnel.

In response to the Review, on March 2, 1994, the Coast Guard published a Notice of Public Meeting and Availability of Study that announced the availability of the Review and scheduled a meeting to seek public comment on its recommendations (59 FR 10031). The public meeting occurred on April 4, 1994, and was well attended by the public, representing a wide range of towing interests. Public comments, both oral and written, helped shape the NPRM.

Advisory committees that addressed the towing-safety initiative (the Review) included the Merchant Marine Personnel Advisory Committee (MERPAC) and the Towing Safety Advisory Committee (TSAC). These committees and several of their working groups created reports to address licensing and training. The NPRM drew on the reports, too.

Note, also, that many issues pertaining to licensing and training of matters come within the International Convention on Standards of Training, Certification and Watchkeeping for Seafearers, 1978 (STCW). An interim rule (62 FR 34506; June 26, 1997) carries this treaty into domestic effect. Consequently, mariners serving on seagoing towing vessels must meet the requirements of STCW on training, certification, and watchkeeping, as stated previously in the NPRM.

The Coast Guard received over 780 comment letters in response to the NPRM. Because of this response, the Coast Guard published a notice of intent (61 FR 66642; December 18, 1996) explaining that would modify the NPRM along lines urged by public comment and the advisory committees, and would publish the changes in an SNPRM. This would afford the public an opportunity to comment on the revisions before issuance of a final rule.

The regulatory language of this SNPRM combines text from the NPRM with text based on comments on the NPRM. The preamble of this SNPRM discusses only the new text.

In an effort to develop a more customer-oriented approach to drafting regulations, the Coast Guard will publish the final rule using "plain language" techniques. Clear, more readable regulations are important for the success of our government's reinvention initiative.

Discussion of Comments and Changes

Although the Coast Guard received comments from all geographic areas, most (75 percent) came from the Gulf and Western rivers. The comments addressed the following subjects: (1) Public meetings and extension of the comment period; (2) responsibilities of companies; (3) responsibilities of the masters; (4) a need for additional input from mariners: (5) overall cost and cost-benefit analysis; (6) completion of approved training courses: (7) approved training courses using check-ride assessments to demonstrate proficiency; (8) approved training courses using simulators to demonstrate proficiency; (9) designated examiners; (10) training-record books; (11) refresher courses; (12) title terminology: (13) licensing structure: (14) horsepower as a basis of authority: (15) route endorsements; (16) grandfathering of licenses; (17) special endorsements: and (18) other, general subject matter.

1. Public Meetings and Extension of the Comment Period

Of the 780 comments, 489 requested either additional public meetings or an extension of the comment period. Because many contained multiple suggestions for modifying the proposed requirements, the Coast Guard deemed it appropriate to incorporate any changes into an SNPRM. This would afford the public time to reflect upon the changes, rather than repeat itself on the NPRM. This SNPRM provides the public with an opportunity both to comment in writing and to participate in public meetings at times and places announced by later notices in the **Federal Register.**

2. Responsibilities of Companies

The Coast Guard received 48 comments suggesting that individual companies be held responsible, in addition to the mariners, for the safe operation of their towing vessels. The comments alleged that some companies use coercive tactics to force mariners to

operate vessels beyond normal safety limits so that products arrive at their destination on time: ultimately straining the mariners, the companies, and the industry.

The Coast Guard recognized in the NPRM that many companies have already demonstrated their commitments to safety by ongoing training and evaluating of their employees. Under the SNPRM, companies would share greater responsibility for training and qualification of mariners by establishing approved training courses, recommending designated examiners, and overseeing the completion of mariners' training-record books. This increase in responsibility is consistent with Licensing 2000 and with the TSAC Report, both of which urged increased responsibilities of companies and accountability for the competence and quality of mariners. The Coast Guard will not condone coercion directed at forcing mariners to operate towing vessels in an unsafe manner. Any unsafe operating conditions should be reported to the Coast Guard in reliance on 46 U.S.C. 2114.

3. Responsibilities of the Masters

The Coast Guard received 339 comments concerning masters' (captains') responsibilities. Many misinterpreted language in the NPRM to mean that the master would assume responsibility for the vessel and the actions of its crew at all times.

In the past, the Coast Guard held an operator of uninspected towing vessels (OUTV) responsible for the operation of the towing vessel only during his or her watch. However, business practices dictated-and the Coast Guard concluded-that one operator (the lead OUTV), usually referred to as the "front watch," should be designated as the captain, who would be responsible for the safe operation of the vessel at all times. Although the Coast Guard does consider the captain to be in control of the vessel's operations or management at all times, it does not consider him or her to be responsible for the misconduct or incompetence of the second officer, usually referred to as the "back watch," unless that officer was following directions issued by the captain. The NPRM did not, and this SNPRM does not, intend any change in this understanding.

4. A Need for Additional Input From Mariners

The Coast Guard received 188 comments expressing disapproval at its failure to involve mariners during the preliminary stages of this rulemaking. These comments encouraged the Coast Guard to avail itself of the knowledge and experiences of active mariners, to develop accurate and safe regulations. The Coast Guard always endeavors to involve all interested parties in the rulemaking process and encourages active mariners to participate in future public meetings, industry meetings, and the additional comment period that this SNPRM provides.

5. Overall Cost and Cost-Benefit Analysis

The Coast Guard received 359 comments on cost. Sixty (17 percent) opposed the cost-benefit analysis, stating that the dollar figures did not reflect current salaries or wages, accurate simulator and check-ride costs, or realistic designated-examiner fees. The remaining 299 (83 percent) made general statements about the excessive financial burden that the rule would place on small businesses and individual mariners. These comments argued that the industry is already heavily burdened with other licensing expenses, such as new radar requirements, renewal fees, medical examinations, and drug-screening examinations, and should not be financially responsible for additional licensing requirements. One comment even suggested that the Coast Guard should be held financially responsible for demonstration of proficiency.

The Coast Guard has evaluated the comments from the public and various recommendations from TSAC, all of which concern the cost-benefit analysis. The analysis within the SNPRM reflects editorial comments and current technical information that the Coast Guard has reviewed and applied to the regulatory assessment for the SNPRM.

6. Completion of Approved Training Courses

A few comments supported the idea of approved training courses as written, but most questioned including simulator training, check-ride assessments, and a practical demonstration of proficiency at the time of renewal. (Later sections discuss both simulator training and check-ride assessments). With regard to renewals, acting on a recommendation from TSAC the Coast Guard now proposes to let those mariners who have maintained recency of service and have not had their licenses revoked or suspended document their service and proficiency rater than undergo practical demonstrations of proficiency at license renewal. Proof acceptable for these mariners at license renewal includes evidence of the minimum required service in the form of a company-provided service letter and evidence of continued navigational proficiency in the form either of a letter or another document from the operator's employer or of an ongoing training-record book. In addition, all candidates for renewal of licenses as Masters of Towing Vessels will have to pass a rules-of-the-road exercise or refresher course. Accordingly, mariners who have not maintained recency of service, or who have been the subject of suspension or revocation proceedings, would have to demonstrate proficiency by check-ride assessment or simulator in order to renew their licenses.

7. Approved Training courses Using Check-Ride Assessments To Demonstrate Proficiency

Of the 254 comments received in response to the NPRM concerning this subject, 71 percent opposed the proposed requirement of a practical demonstration by a check-ride. Most of the 71 percent came from mariners who already have several years of experience in the towing industry and resent that, at the time of renewal, they may have to "prove" to someone that they are capable of handling towing vessels. Another 19 percent opposed the requirement of practical demonstration of proficiency by check-ride for experienced mariners, but supported it for mariners with little or no experience and for those with histories of poor seamanship. Others suggested that company letters declaring mariners' competence be acceptable as an alternative to the practical demonstration of proficiency by check-ride. Only 10 percent supported a practical demonstration of proficiency by check-ride as proposed. The Coast Guard now proposes that practical demonstrations of proficiency by check-ride be mandatory only for license-renewal applicants whose most recent licenses were suspended or revoked by administrative action on charges of incompetence. However, other applicants may still opt for the practical demonstrations in lieu of submitting properly maintained training-record books.

8. Approved Training Courses Using Simulators To Demonstrate Proficiency

The Coast Guard received 115 comments addressing simulator training. Of those, 86 percent opposed such training, for two reasons: (1) The excessive cost to companies as well as individual mariners; and (2) the inadequate number of simulators available to provide each mariner sufficient training time. In addition, 5

percent simply opposed such training for experienced mariners. However, these same comments supported it for mariners with little or no experience. Nine percent supported it with various modifications such as allowing mariners to use simulators for training though not for demonstrating proficiency. In this SNPRM, the Coast Guard still proposes to accept (not require) simulator training, as well as use of actual towing vessels, for demonstrating proficiency by check-ride.

9. Designa ted Examiners

Of the 130 comments on the proposed use of a designated examiner, only 10 percent opposed the idea. Once again, most of the 10 percent expressed resentment at having to potentially "prove" their abilities for license renewal to a designated examiner that may have less experience. However, while the comments opposed the use of a designated examiner for experienced mariners, they supported the idea for the monitoring of entry-level masters and mates.

In contrast, the remaining 90 percent generally supported application of the idea for all mariners. These supporting comments also raised several concerns and offered suggestions for modifying the designated-examiner proposal, most of which emphasized the need for Coast Guard control of the designated-examiner program. Of primary concern was assurance from the Coast Guard that companies and training institutions would in no way be involved in the selection of designated examiners. The comments argued that, by excluding companies and training institutions from this decision, the Coast Guard would reduce the potential for partiality and inconsistency throughout the towing industry. However, a few comments did request that the Coast Guard allow individual companies to designate their own examiners. A few comments recommended that the Coast Guard control the selection, training, and re-qualification of potential designated examiners. Others comments requested that the Coast Guard ensure that mariners designated as examiners be well-experienced, not just grandfathered. towing-vessel mariners with higher-level licenses and more experience than those of the mariners they are certifying. Last, some encouraged the Coast Guard to determine and clarify the criteria used for passing or failing a prospective mariner and the procedures for appealing a designated examiner's decision and urged the Coast Guard to negate the potential liability of the designated examiner-possibly by requiring two or more check-rides with different designated examiners.

An alternative demonstration of proficiency for renewal was recommended by TSAC and includes documentation in the form of a training-record book listing training, drills, experience during the license's validity, and any administrative action culminating in suspension or revocation against the license. The Coast Guard agrees with TSAC and has determined that there should be an alternative method for renewal. The Coast Guard also tasked TSAC with determining guidelines for pass-fail criteria, and TSAC has submitted acceptable ones, which this SNPRM draws on.

The SNPRM defines a designated examiner as a person trained or instructed in assessment techniques and otherwise qualified to evaluate whether a candidate for a license, document, or endorsement has achieved the level of competence necessary to hold the license, document, or endorsement. As in the NPRM, this person may be designated by the Coast Guard either directly or (within the context of a program of training or assessment approved by the Coast Guard) indirectly. A recently issued TSAC report recommended that a designated examiner administering a check-ride assessment evaluate a mariner's performance in six categories: (1) Vessel familiarity; (2) communications; (3) emergency procedures: (4) rules of the road: (5) piloting and navigation; and (6) maneuvering. Intervention by the vessel master or designated examiner, serious violation of a rule of the road, causing of a reportable marine incident, or failure by the operator to sufficiently demonstrate his or her proficiency in one or more of the six categories would be grounds for failure of a check-ride assessment. The operator would then have to wait at least 30 days before undergoing a re-evaluation. The Coast Guard is considering how to implement this TSAC recommendation, however, we have decided not to include it in this SNPRM.

10. Training-Record Book

Of the 27 comments on the proposed requirement of maintaining a training-record book, only 4 opposed the use of such a tool. These four argued that the vessel's daily radio log would provide sufficient evidence of a mariner's training and service, and that use of such a record book, if implemented, would cause a financial burden to the industry. In addition, two of the four suggested, as an alternative, that a letter of recommendation from two active masters under whom the mariner served and a letter from the company should be enough to prove training.

The remaining comments supported use of a training-record book, but offered suggestions for modifying it. These suggestions included the following: (1) Require mariners to maintain a daily logbook; (2) require owners to ensure that the logbook is accurate and up to date by using attached letters yearly or trip by trip; (3) place sole responsibility for the logbook's accuracy and content on the individual mariner; (4) standardize-or, at the very least, establish guidelines as to the minimum-information that the training-record book must contain to expedite review; and (5) develop a process that would allow electronic maintenance of records. The Coast Guard agrees with the 23 comments that recommend the training-record book as a valuable document to efficiently demonstrate experience in the covered subjects.

Because the towing industry is so diverse, a separate training-record book will have to be created for each segment of the industry, such as vessel assist, western rivers, coastal, and ocean towing. The Coast Guard anticipates that allowing completion of a training-record book for an STCW endorsement will allow a mariner to qualify for oceans and international service without additional training.

11. Refresher Courses

Of the 92 comments on refresher courses and rules-of-the-road testing, 39 percent opposed such courses: 4 comments specifically opposed such testing. In contrast, 56 comments supported some form of approved training relative to refresher courses or testing—3 1 wholly supported a refresher course, and 21 wholly supported rules-of-the-road testing. Of those in favor of testing or courses, many supported approved training and testing through various methods including open-book examinations, oral examinations, examination by mail, classroom training, and training based on degree of experience.

This SNPRM would allow four options to fulfill the requirements for demonstration of proficiency: (1) Complete an approved course using a simulator; (2) complete an approved course using a towing vessel; (3) complete a check-ride assessment with a designated examiner: or (4) submit documentation mentioned as an option to the completion of an approved training course. Additionally, it would let mariners complete refresher-training courses on rules of the road in place of exercises. The Coast Guard agrees with

TSAC's observation that a rules-of-the-road exercise or a refresher course can only improve safety throughout the industry. Consequently, the proposed requirement of rules-of-the-road knowledge for renewal persists in this rulemaking.

12. Title Terminology

The Coast Guard received 34 comments pertaining to the terms used for crewmembers on a towing vessel, 30 of which opposed replacing the terms "operator" and "second-class operator" with the terms "master" and "mate (pilot)". Their argument, similar to that embraced by TSAC, was that, throughout the history of inland towing, "mate" has never referred to a licensed officer; rather, it has referred to the chief unlicensed deck person, while "pilot" has referred to the licensed person that operates the vessel. This SNPRM would leave "pilot of towing vessels" available for use on Western rivers. The license requirements for mater of towing vessels and pilot of towing vessels remain identical. Again, this term in no way implies either the taking or passing of the first-class pilotage examination or the associated level of proficiency: it merely reflects the historical application of titles in the inland towing industry.

13. Licensing Structure

The Coast Guard received 58 comments regarding the proposed licensing structure. Of them, 52 percent opposed the new licensing structure, for the following reasons: (1) 48 months does not provide enough wheelhouse experience for an unlimited master's license; (2) implementing a third-level license will be costly to entry-level mariners as well as to companies (because, for example, some vessels do not have the spare room to allow another person on board): (3) the apprentice-mate level is unnecessary because mariners already receive hands-on training as seamen and most companies already have training programs in place; and (4) the structure would limit mariners to certain areas and vessels. Several comments opposed the idea of "direct supervision" during the training of an apprentice mate, explaining that standing watch alone is necessary at some point during the practice sessions. A separate comment stated that no standard time-limit for the training of apprentice mates should be preset since everyone learns at a different pace.

A total of 28 comments supported the proposed licensing structure, given its aim to increase experience and skill. However, some of these comments offered suggestions to change terminology (as noted above in category 12) and the amount of time a mariner is to serve as an apprentice mater before becoming a mate varying from 1 to 5 years. Other comments specifically recommended that the Coast Guard ensure that no current mariner-in-training be hastily granted a license as mate (pilot) to avoid the requirements of this rulemaking.

Under current rules, the OUTV license requires 3 years of total service. Under this SNPRM a Master of towing vessels would require 4 years of service, the same as Master: (1) Ocean and Near-coastal, 1600 GT; (2) Great Lakes or Inland, any GT; and (3) Uninspected fishing-industry vessels. The proposed licensing structure would require a mariner to gain wheelhouse training and experience before taking the exam for a license as apprentice mate or steersman of towing vessels. More training and experience in the wheelhouse and completion of the training-record book would then qualify him or her for a demonstration of proficiency with a designated examiner before issuance of a license as mate (pilot) of towing vessel. A license as mate (pilot) would qualify a mariner to stand the watch of the current second-class OUTV or "back watch," but would not authorize the person to serve as master.

14. Horsepower as a Basis of Authority

The Coast Guard received a total of 365 comments pertaining to the proposed 3000-horsepower breakpoint. Twelve percent of the 365 supported using a horsepower breakpoint to limit licenses—6 percent of which suggested variations to the NPRM such as applying it to entry-level mariners only and creating a third breakpoint.

Of the 365, 60 percent opposed any sort of horsepower breakpoint, primarily on the basis that it would limit employment for both mariners and companies by restricting mariners to vessels of particular horsepowers. Twenty-six percent of them objected to the breakpoint as written and requested that it be either removed or completely revised using a higher breakpoint; in contrast, only 2 percent of them stated that 3000 horsepower was too high and requested that it be either removed or completely revised using a lower breakpoint. Another twelve percent of the opposing comments specifically recommended that the Coast Guard remove any horsepower breakpoint as the qualifying criterion and use a ratio of the vessel's gross tonnage to the size of the vessel's tow. Many of them opposed the horsepower breakpoint arguing that small towing vessels require just as much handling responsibility as, and often more than, larger vessels since smaller vessels are limited in maneuvering capability. They argued that the size of the two-not the horsepower of the tug-determines the level of safety. Mariners also expressed concern that a breakpoint would let employers prevent less-experienced mariners from obtaining equal employment-opportunities.

In consideration of the comments received and TSAC's recommendation, the Coast Guard has decided to replace the horsepower breakpoint with proficiency as the basis of authority for the new licensing system. The TSAC working group pointed out that, while some level of horsepower had originally seemed a sound criterion for differentiation of licenses, no consensus had ever formed within the industry as to just what level was most appropriate for a breakpoint. Therefore, increased emphasis on the experience an applicant has on particular waters will replace any such breakpoint.

15. Route Endorsements

The Coast Guard received about 65 comments pertaining to route endorsements, 17 percent of which supported them as proposed and perceived geographical knowledge of the traveled area as a necessity. Some of these comments even suggested that the endorsements be more restrictive than proposed. Meanwhile, 74 percent of the comments opposed route endorsements. These comments maintained that, in some cases, a mariner may have to travel unlicensed on one route while trying to get to the route for which he or she holds a license (for example, mariners with licenses endorsed for Oceans already have to travel through Near-coastal waters to get to their regular routes). In addition, the comments argued that route endorsements would unnecessarily restrict mariners, ultimately limiting their employment-financially and professionally-within a company.

Other concerns expressed by the comments pertained to either specific route endorsements or procedures for obtaining endorsements. Several comments argued that Western rivers covers multiple routes and should therefore be eliminated from the proposed rule or modified to reflect specific routes. A separate comment recommended inclusion of the Mississippi in that for Western rivers, while others requested clarification of those for Rivers and Western rivers, and inclusion of the Gulf Intercoastal Waterways in that for either Near-coastal waters or the Great Lakes and inland waters. Comments also requested

the Coast Guard to allow use of an employment record or company document for proof of time and experience on a particular route.

Under this SNPRM, as under the NPRM, towing vessel-licenses would be issued for the following routes:

a. Oceans.
b. Near-coastal routes.
c. Great Lakes and inland routes.
d. Rivers.
e. Western rivers.
f. Restricted local areas designated by Officers in Charge, Marine Inspection (OCMIs).

The license of a master or mate (pilot) of towing vessels endorsed for Oceans would authorize service on Near-coastal routes, Great Lakes and inland routes, or Rivers upon 30 days of observation and training on the subordinate route. That of a master or mate (pilot) of towing vessels endorsed for Near-coastal routes would authorize service on Great Lakes and inland routes or Rivers upon 30 days of observation and training on the subordinate route.

On the Western rivers, the methods of towing, the aids to navigation, the operating methods, and the operating environment are unique. Therefore, not even the license of a master or mate (pilot) of towing vessels endorsed for Oceans, Near-coastal routes, Great Lakes and inland routes, or Rivers would authorize service on Western rivers. To get an endorsement for this service, an applicant would have to show 90 days of operation and training over a route on a Western river.

To get an endorsement for a new route, an applicant would have to pass an exam for the route and serve in the next lower grade for 90 days on the route sought. Afterwards the Coast Guard would remove the lower-grade restriction. For example, an applicant holding a license as master of towing vessels endorsed for Rivers, applying for the same license endorsed for a Near-coastal route, would have to pass an exam for this route and submit evidence of 90 days' experience as not a master but a mate on this route. Upon completion of the required sea service, the applicant could have his or her master's license endorsed for this route.

16. Grandfathering of Licenses

The Coast Guard received 56 comments pertaining to the licensing of experienced mariners, the majority of which (84 percent) wholly supported grandfathering holders of current licenses commensurate with experience. The remaining comments either opposed grandfathering or requested clarification on the criteria for grandfathering.

Mariners currently holding OUTV licenses could have them renewed as licenses for masters of towing vessels. These mariners therefore would be grandfathered in that they would have to meet only the renewal requirements contained in the proposed rule.

17. Special Endorsements

The Coast Guard received about 25 comments in response to its request for comments on the applicability of the proposed requirements, specifically the horsepower breakpoint on harbor-towing vessels and assist-towing vessels. Only 4 comments opposed a harbor endorsement, free of horsepower limitation, while 12 comments supported a harbor endorsement for the following reasons: (1) Harbor work requires flexibility: (2) harbor vessels do not face the same level of danger as do line boats; and, (3) without the endorsement, the proposed horsepower breakpoint would limit career advancement. A separate comment suggested that, since harbor-towing companies normally use their operators on all of their boats at one time or another, a harbor-vessel operator should have to demonstrate proficiency on the company-owned vessel with the highest horsepower.

Three comments supported a special endorsement for masters of assist-towing vessels on the basis that it would be difficult to obtain a master to undertake a ship assist without such endorsement. These comments also noted that assist-towing vessels have different demands from other towing vessels and need less damage control. Another comment suggested applying a horsepower limitation on an endorsement for assist-towing vessels if the mariner seeking it has experience only with such vessels. However, the same comment argued that those mariners with experience on vessels of greater horsepower should be permitted to operate these without limitation by a restrictive endorsement. Only three comments agreed that operators of assist-towing vessels of 26 feet or more in length that are hired for commercial use should be subjected to the same standards and testing as operators of other towing vessels.

TSAC voiced concern about the difficulties for mariners in the vessel assist segment of the industry to obtain training time for the apprentice mate (steersman) license. TSAC recommended that vessel assist applicants proceed to the mate (pilot) license by completing the written exam and demonstrating proficiency at the same time. Note: The mariner will also have to complete either the training-record book or an approved training course.

The SNPRM does not propose a horsepower breakpoint for towing-vessel licenses. Vessel assist licenses (not to be confused with licenses endorsed for Assistance-Towing) may go directly to mate of towing vessels without getting an apprentice mate (steersman) license but will be limited to the vessel assist portion of the industry.

The Coast Guard received four comments pertaining to other types of vessels used in the towing industry. One comment requested that oil-spill-response vessels be excluded from the proposed requirements because the requirements would create an unnecessary financial burden on the companies that operate these vessels without enhancing navigational safety. Two comments supported an endorsement for anchor-handling tug-supply (AHTS) vessels, which support the offshore industry, because barge towing is not a primary source of employment for these vessels. Another comment noted that the NPRM had not discussed passenger barges, but requested that they be exempt from this rulemaking. Passenger barges are inspected and certified by the Coast Guard and, by themselves, are not affected by this rulemaking. However, the means of propulsion (towing vessels) for the most part do not require inspection and certification, and are included in this rulemaking.

Oil-spill-response-vessels will not normally be exempt from the proposed licensing requirement; however, in emergencies such as a major oil spill, the local OCMI can temporarily exempt oil-spill-response-vessels for the duration of the emergency. AHTS vessels may already qualify for licensing exemptions, and no additional exemptions for this segment of the industry are being considered.

The Coast Guard notes that vessels engaged solely in assistance towing are covered by existing regulations and remain exempt from this rulemaking. It has proposed a definition of disabled vessel under § 10.103 to better define the assistance-towing industry and show that this proposed rule does not cover that industry.

The Coast Guard recognizes that-by employing similar terms, ***Assistance towing*** and ***Vessel assist,*** for dissimilar industries-it may be risking confusion. The Coast Guard invites your comments to avert any confusion.

18. Other, General Subject Matter

Several comments opposed the Coast Guard's attempt to further regulate the towing industry, an attempt based, they stated, on one mariner's incompetence resulting in the Amtrak casualty. Other comments (inconsistent with those) resented the application of blue-water rules to a brown-water industry. Remaining comments cited the Coast Guard's failure to properly and safely maintain waterways and regulate recreational and pleasure boats, rather than operators' errors, as the basis for problems in the towing industry. A number of these comments did not relate directly to the content of the proposed regulations. Illustrative of these were issues of the 12-hour work limit (2-watch system), the increased manning of towing vessels to include a licensed engineer, and the reason for improved aids to navigation. The Coast Guard has addressed and will address these issues and others in appropriate ways outside of this SNPRM.

The definitions of "Coast Guard-accepted, '' "designated examiner," "practical demonstration," "qualified instructor," and "standard of competence," proposed under § 10.103, and § 10.309, titled, "Coast Guard-accepted training other than approved courses", were published in the Coast Guard interim rule implementing the 1978 Standards of Training, Certification and Watchkeeping for Seafarers as amended in 1995 (62 FR 34506); and, therefore, they have been removed from this proposed rulemaking.

Regulatory Evaluation

This proposed rule is not a significant regulatory action under section 3(f) of Executive Order 12866 and does not require an assessment of potential costs and benefits under section 6(a) (3) of that Order. It has not been reviewed by the Office of Management and Budget under that Order. It is not significant under the regulatory policies and procedures of the Department of Transportation (DOT) (44 FR 11040; February 26, 1979).

A draft Regulatory Evaluation under paragraph 10e of the regulatory policies and procedures of DOT has been prepared and is available in the docket for inspection or copying where indicated under **ADDRESSES.** A summary of the Evaluation follows:

Summary of Benefits

The principal benefits of this proposed rule would be to enhance the safety of navigation and reduce the risk of collisions, allisions, groundings, fatalities, and injuries in the towing industry. The training required by this rule has the particular potential to significantly decrease the number of fatalities and injuries in the industry. If this rule reduces the number of reportable marine casualties-whether they involve fatalities, injuries requiring professional medical treatment, or property damage costing in excess of $25,000—by 13 a year over the next 10 years, the benefits will exceed the costs. The effectiveness to this rulemaking cannot be accurately quantified because of the inability to measure the damage dollars based on human error alone. However, the baseline of preventing 3 deaths, which is 50% of the total fatalities which occurred in the past ten years from casualties that this rule should prevent, would be $8.1 million. Therefore, this alone will exceed the total cost of the rulemaking. The complex cumulative effect of human error makes it difficult to quantify the exact benefits of the proposed rule.

One way to reduce the risks associated with human error in operating towing vessels is to ensure that mariners maintain the highest practicable standards of training, certification, and competence. Although the Coast Guard recognizes that many prudent operators already practice proficient navigation, this rule would codify their skills, provide basic performance standards for demonstration of proficiency, and compel compliance for operators not conforming to sound practices of the majority of the industry. The rule is intended to accrue benefits from a reduction of towing-vessel accidents and injuries through an increased awareness of safe towing practices.

Summary of Costs

There are around 5,400 documented towing vessels in the United States. The impact on the operators of these vessels would be minimal because holders of current licenses would be grandfathered into licenses commensurate with their experience. Because these new licenses would be issued at the time of routine renewal, there would be no new users' fees for them. The proposed rule, however, would result in increased fees for new entrants into the industry.

Most changes to the proposed rule in this SNPRM either are editorial or update technical information to reflect comments to the NPRM. But there are certain ones that are substantive and will require different behavior by mariners. Responsive to comments from the public and TSAC, the Coast Guard would let those mariners who have maintained recency of service, and have not had administrative action against their license culminating in suspension or revocation, forgo any demonstration of proficiency for license renewal; rather, the Coast Guard would let them submit "information".

The Coast Guard estimates the annual costs of compliance-for new entrants into the industry-with the proposed rule at around $1,057,850. The lo-year present value of these costs, discounted at 7 percent back to 1996, would total $7,429,896.

Small Entitles

Under the Regulatory Flexibility Act (5 U.S.C. 601 *et* seq.), the Coast Guard considers whether this proposed rule, if adopted, will have a significant economic impact on a substantial number of small entities. "Small entities" include small businesses, not-for-profit organizations that are independently owned and operated and are not dominant in their fields, and governmental jurisdictions with populations of less than 50,000.

This proposed rule would place its primary economic burden on the mariners, not on their employers-who may, though they need not, assume responsibility for this burden. The Coast Guard expects that, of the employers who would assume this responsibility, few, if any, would be small entities. Therefore, the Coast Guard certifies under 5 U.S.C. 605(b) that this rule, if adopted, will not have a significant economic impact on a substantial number of small entities. If, however, you think that your business or organization qualifies as a small entity and that this rule will have a significant economic impact on your business or organization, please submit a comment **(see ADDRESSES)** explaining why you think it qualifies and in what way and to what degree this proposed rule would economically affect it.

Assistance for Small Entities

In accordance with section 2 13(a) of the Small Business Regulatory Enforcement Fairness Act of 1996 (Pub. L. 104–12 1), the Coast Guard wants to assist small entities in understanding this proposed rule so that they can better evaluate its effects on them and participate in the rulemaking process. If your small business or organization is affected by this rule and you have questions concerning its provisions or options for compliance, please contact LCDR Don Darcy, Office of Operating and Environmental Standards (G–MSO), 202–267–0221.

Collection of Information

This proposed rule provides for a collection of information under the

Paperwork Reduction Act of 1995 (44 U.S.C. 3501 *et* seq.). As defined in 5 CFR 1320.3(c), "collection of information" includes reporting, recordkeeping, monitoring, posting, labeling, and other, similar actions. The title and description of the information collections, a description of the respondents, and an estimate of the total annual burden follow. Included in the estimate is the time for reviewing instructions, searching existing sources of data, gathering and maintaining the data needed, and completing and reviewing the collection.

D O T No.: 2115.

OMB Control No.: 2115-0623.

Title: Licensing and Manning for Officers of Towing Vessels.

Summary of the Collection of Information: This proposed rule would require every mariner who seeks an original license as mate (pilot) of towing vessels or an endorsement for towing vessels to have a training-record book. It may also require a report on a final check-ride before a designated examiner.

Need for Information: The need for the collection of information is to ensure that the mariners' training information is available to assist in determining an individuals overall qualification to hold a Coast Guard issued merchant mariners license. These recordkeeping requirements are consistent with good commercial practices to the end of good seamanship for safe navigation. The following is a section-by-section explanation of them:

Proposed § 10.304(e) would require each applicant for a license as mate (pilot) of towing vessels, and each master or mate of self-propelled vessels of greater than 200 gross tons seeking an endorsement for towing vessels, to complete a training-record book.

Proposed § 10.463(h) would require a company to maintain evidence that every vessel it operates is under the direction and control of a licensed mariner with appropriate experience, including 30 days of observation and training on the intended route. The company could do this with copies of current licenses and voyage records that most companies already keep.

Proposed § 10.464(d) (2) would require masters of vessels of greater than 200 GT to maintain training-record books for license endorsements as masters of towing vessels. Collection of this information is necessary to ensure that the masters have completed the series of qualifications for licensing.

Proposed §§ 10.465(a) (2), (b) (2), (c) (2), and (d)(Z) would each require a final check-ride before a designated examiner. They would then require the applicant to submit his or her completed training-record book to the Coast Guard Regional Examination Center. Collection of this information is necessary because it would raise the safety of towing by upgrading the evaluation process.

Proposed § 10.465(d) (2) would also require mates of self-propelled vessels of greater than 200 GT to maintain training-record books for license endorsements as mates (pilots) of towing vessels. Collection of this information is necessary to ensure that the mates have completed the series of qualification for licensing.

Proposed Use of Information: This information would warrant the mariner qualified to hold a license for the service in which he or she would engage.

Description of Respondents: Mariners licensed to operate towing vessels, prospective towing vessel officers, and companies employing these mariners.

Number of Respondents: 14,455 mariners of towing vessels and approximately 400 companies employing these mariners, during a 3-year period.

Frequency of Response: For 60 percent of the mariners, the frequency of response is estimated to be once over the initial three years. An estimated five percent of currently licensed mariners may complete a report on a final check-ride before a designated examiner every 5 years. Final check-ride before a designated examiner under proposed §§ 10.465 (a) (2), (b) (2), (c) (2), and (d) (2) would entail a one-time record after the mariner's training-record book had been completed. Approximately 400 companies would be required to maintain a license and voyage record file for each mariner to be revised upon the expansion of a mariner's route.

Burden of Response: Approximately 95 percent of current licensed towing vessel operators would have to perform an estimated 1.0 hour of management over a 3-year period to provide the Coast Guard updates of their licensing records. Approximately five percent of the currently licensed mariners may perform an estimated 0.5 hours of management time to comply with providing the Coast Guard the final check-ride. Approximately 1,560 entry mariners seeking a license to operate towing vessels would have to perform an estimated 1 .0 hour of management time over a 3-year period to comply with providing the Coast Guard updates of their licensing records. Under proposed § 10.643(h), approximately 400 companies would have to maintain evidence that every vessel it operates is under the direction and control of a licensed mariner with appropriate experience. Each company would perform 0.25 hours of administrative time for each mariner to maintain these records. The estimated cost burden for information collection would be § 106,069.25 per year and $318,207.75 for the initial 3 years.

Estimated Total Annual Burden: During a 3-year period, the total reporting and recordkeeping burden would be 12,7 17.25 hours.

As required by section 3507(d) of the Paperwork Reduction Act of 1995, the Coast Guard has submitted a copy of this proposed rule to the Office of Management and Budget (OMB) for its review of the collection of information.

The Coast Guard solicits public comment on the proposed collection of information to: (1) Evaluate whether the information is necessary for the proper performance of the functions of the Coast Guard, including whether the information would have practical utility; (2) evaluate the accuracy of the Coast Guard's estimate of the burden of the collection, including the validity of the methodology and assumptions used; (3) enhance the quality, utility, and clarity of the information to be collected; and (4) minimize the burden of the collection on those who are to respond, as by allowing the submittal of responses by electronic means or the use of other forms of information technology.

Persons submitting comments on the collection of information should submit their comments both to OMB and to the Coast Guard where indicated under **ADDRESSES** by the date under **DATES.**

Persons are not required to respond to a collection of information unless it displays a currently valid OMB control number. Before the requirements for this collection of information become effective, the Coast Guard will publish notice in the **Federal Register** of OMB's decision to approve, modify, or disapprove the collection.

Federalism

The Coast Guard has analyzed this rule under the principles and criteria contained in Executive Order 126 12 and has determined that this proposed rule does not have sufficient implications for federalism to warrant the preparation of a Federalism Assessment.

Environment

The Coast Guard considered the environmental impact of this proposed rule and concluded that, under paragraph 2.B.2.e.(34) of Commandant Instruction M16475.1B, this rule is categorically excluded from further environmental documentation. This rule

is a matter of "training, qualifying, licensing and disciplining of maritime personnel" within the meaning of subparagraph 2.B2.e (34) of Commandant Instruction M16475.1B that clearly has no environmental impact. A "Categorical Exclusion Determination" is available in the docket for inspection or copying where indicated under **ADDRESSES.**

List of Subjects

46 CFR Part 10

Reporting and recordkeeping requirements, Schools, Seamen.

46 CFR Part 15

Reporting and recordkeeping requirements, Seamen, Vessels.

For the reasons discussed in the preamble, the Coast Guard proposes to amend 46 CFR parts 10 and 15 as follows:

PART10—LICENSING OF MARITIME PERSONNEL

1. Review the authority citation for part 10 to read as follows:

Authority: 14 U.S.C. 633; 31 U.S.C. 9701; 46 U.S.C. 2101, 2103, and 2110; 46 U.S.C. Chapter 71; 46 U.S.C. 7302, 7502, 7505, and 7701; 49 CFR 1.45 and 1.46. Section 10.107 is also issued under the authority of 44 U.S.C. 3507.

2. To § 10.103, add definitions, in alphabetical order, to read as follows:

§ 10.103 Definitions of terms used in this part.

Apprentice mate (steersman) of towing vessels means a mariner qualified to perform watchkeeping on the bridge, aboard a towing vessel, while in training under the direct supervision of a licensed master or mate (pilot) of towing vessels.

* * * * *

Approved training means training that is approved by the Coast Guard or meets the requirements of § 10.309.

* * * * *

Disabled vessel means a vessel that needs assistance, whether docked, moored, anchored, aground, adrift, or under way; but does not mean a barge or any other vessel not regularly operated under its own power.

* * * * *

Pilot of towing vessels means a qualified officer of towing vessels operating exclusively on inland routes.

* * * * *

Vessel Assist means the use of a towing vessel during maneuvers to dock, undock, moor, or unmoor a vessel, or to escort a ship with limited maneuverability.

* * * * *

§ 10.201 [Amended]

3. In § 10.201, in paragraph (f)(l), remove the words "second-class operator of uninspected towing vessel" and add, in their place, the words "mate (pilot) of towing vessels (19 years)"; and, in paragraph (f) (2), remove the words "designated duty engineer of vessels of not more than 1,000 horsepower, may be granted to an applicant who has reached the age of 18 years.'' and add, in their place, the words "designated duty engineer of vessels of not more than 1,000 horsepower, or apprentice mate (steersman) of towing vessels, may be granted to an applicant, otherwise qualified, who has reached the age of 18 years."

§ 10.203 [Amended]

4. In § 10.203, in Table 10.203, remove the word ''Uninspected'' from before the words "towing vessels" and capitalize the first letter in the word "towing" in column one; and remove the words "Operator: 21; 2/c operator: 19.'' from the license category that way just amended to read "Towing vessels" in column two and add, in their place, the words "Master of towing vessels: 2 1; mate (pilot) of towing vessels: 19; apprentice mate (steersman) : 18''.

§ 10.205 [Amended]

5. In § 10.205, in paragraph (f')(l), remove the words "operator of uninspected towing vessels" and add, in their place, the words "master or mate (pilot) of towing vessels"; and, in paragraph (g) (3), remove the words "All operators of uninspected towing vessels, oceans (domestic trade)" and add, in their place, the words "All licenses for master or mate (pilot), except apprentice mate (steersman), for towing vessels on Oceans".

6. In § 10.209, add paragraphs (c)(6) and (7) to read as follows:

§ 10.209 Requirements for renewal of licenses, certificates of registry, and STCW certificates and endorsements.

* * * * * * *

(c)

(6) Except as provided by paragraph (c)(7) of this section, an applicant for renewal of a license as master or mate (pilot) of towing vessels shall submit satisfactory evidence, predating the application by not more than 1 year, of satisfying the requirements of paragraph (c) (1) (i) or (ii) of this section, or those of paragraph (c) (1) (iv) of this section except the exercise; and of—

(i) Either completing a practical demonstration of maneuvering and handling a towing vessel before a designated examiner or submitting documentation in the form of a training-record book listing training, drills, experience during the license's validity in which an operator's proficiency is assessed over time; and

(ii) Either passing a rules-of-the-road exercise or completing a refresher-training course.

(7) An applicant for renewal of a license as master or mate (pilot) of towing vessels whose most recent license was suspended or revoked by an administrative law judge for incompetence shall complete the practical demonstration rather than submit the training-record book under paragraph (c) (6) (i) of this section.

* * * * *

7. In § 10.304, redesignate paragraph (h) as (i), and add new paragraph (h) to read as follows:

§ 10.304 Substitution of training for required service, and use of training-record books.

* * * * *

(h) Each applicant for a license as mate (pilot) of towing vessels, and each master or mate of self-propelled vessels of greater than 200 gross tons seeking an endorsement for towing vessels, shall complete a training-record book that contains at least the following:

(1) Identification of the candidate, including full name, home address, photograph or photo-image, and personal signature.

(2) Objectives of the training and assessment.

(3) Tasks to be performed or skills to be demonstrated.

(4) Criteria to be used in determining that the tasks or skills have been performed properly.

(5) Places for a qualified instructor to indicate by his or her initials that the candidate has received training in the proper performance of the tasks or skills.

(6) A place for a qualified examiner to indicate by his or her initials that the candidate has successfully completed a practical demonstration and has proved competent in the task or skill under the criteria.

(7) Identification of each qualified instructor by full name, home address, employer, job title, ship name or business address, number of any Coast Guard license or document held, and personal signature.

(8) Identification of each designated examiner by full name, home address, employer, job title, ship name or business address, number of any Coast

Guard license or document held, and personal signature confirming that his or her initials certify that he or she has witnessed the practical demonstration of a particular task or skill by the candidate.

* * * * *

8. In § 10.403, revise the heading of the section and Figure 10.403 to read as follows:

§ 10.403 Structure of deck licenses.

* * * * *

BILLING CODE 4910–14–M

Figure 10.403 STRUCTURE OF DECK LICENSES

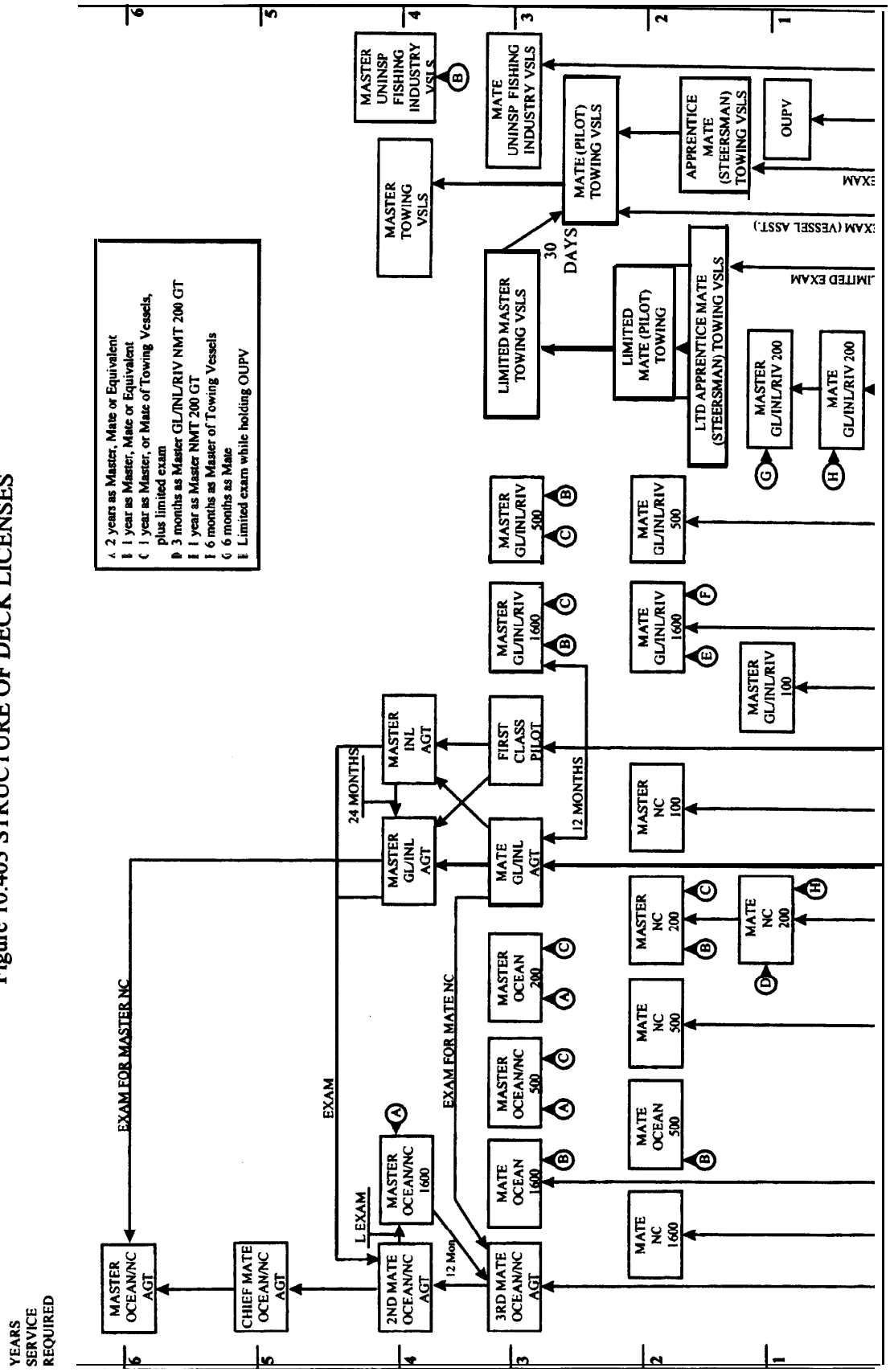

BILLING CODE 4910–14–C

§ 10.412 [Amended]

9. In § 10.4 12(a), remove the words "operator of uninspected towing vessels,".

§ 10.414 [Amended]

10. In § 10.414(a), remove the words "operator of uninspected towing vessels,''.

11. In § 10.418, revise the heading and paragraph (b) to read as follows:

§ 10.418 Service for master of Ocean or Near-coastal steam or motor vessels of not more than 500 gross tons.

* * * * *

(b) The holder of a license as master or mate (pilot) of towing vessels authorizing service on Oceans or Near-coastal routes is eligible for a license as master of Ocean or Near-coastal steam or motor vessels of not more than 500 gross tons after both 1 year of service as master or mate of towing vessels on Oceans or Near-coastal routes and completion of a limited examination.

§ 10.420 [Amended]

12. In § 10.420, remove the words "operator of uninspected towing vessels,".

§ 10.424 [Amended]

13. In § 10.424(a)(2), remove the words "operator or second-class operator of ocean or near coastal uninspected towing vessels" and add, in their place, the words "master or mate of Ocean or Near-coastal towing vessels".

14. In § 10.426, revise the heading and paragraph (a)(2) to read as follows:

§ 10.426 Service for master of Near-coastal steam or motor vessel of not more than 200 gross tons.

(a) * * *

(2) One year of total service as licensed master or mate of towing vessels on Oceans or Near-coastal routes. Completion of a limited examination is also required.

* * * * *

§ 10.442 [Amended]

15. In § 10.442, paragraphs (a) and (b), remove the words "operator of uninspected towing vessels" from the two places where they occur and add, in their places, the words "master or mate (pilot) of towing vessels".

16. In § 10.446, revise the heading and paragraph (b) to read as follows:

§ 10.446 Service for master of Great Lakes and Inland steam or motor vessels of not more than 500 gross tons.

* * * * *

(b) The holder of a license as master or mate (pilot) of towing vessels is eligible for this license after completion of both 1 year of service as master or mate (pilot) of towing vessels and a limited examination specific to towing.

§ 10.452 [Amended]

17. In § 10.452(a), remove the words "operator or second-class operator of uninspected towing vessels" and add, in their place, the words "master or mate (pilot) of towing vessels".

§ 10.462 [Amended]

18. In § 10.462(c) introductory text, remove the words "operator of uninspected towing vessels" and add, in their place, the words "master or mate (pilot) of towing vessels".

19. Add § 10.463 to read as follows:

§ 10.463 General requirements for licenses for master, mate (pilot), and apprentice mate (steersman) of towing vessels.

(a) The Coast Guard issues licenses as master and mate (pilot) of towing vessels in the following categories:

(1) Unlimited. For this section, unlimited means a towing vessel of less than 200 gross tons not conducting *vessel assist.*

(2) Vessel assist.

(b) The Coast Guard restricts licenses as master and mate (pilot) of towing vessels for Oceans and Near-coastal routes by the gross tonnage of the towing vessels on which the experience was acquired-by 200, 500, and 1,600 gross tons, in accordance with §§ 10.424, 10.418, and 10.412, respectively.

(c) The Coast Guard endorses licenses as master, mate (pilot), and apprentice mate (steersman) of towing vessels for one or more of the following routes:

(1) Oceans.

(2) Near-coastal routes.

(3) Great Lakes and inland routes.

(4) Rivers.

(5) Western rivers.

(6) Restricted local areas designated by Officers in Charge, Marine Inspection.

(d) A license as master or mate of towing vessels endorsed for Oceans authorizes service on Oceans. This license also authorizes service on a subordinate route of Near-coastal, Great Lakes and inland, or Rivers (except Western rivers) upon completion of 30 days of observation and training on the specific subordinate route.

(e) A license as master or mate (pilot) of towing vessels endorsed for Near-coastal routes authorizes service on Near-coastal routes, Great Lakes and inland routes, and Rivers (except Western rivers) upon completion of 30 days of observation and training on each subordinate route.

(f) A license as master or mate (pilot) of towing vessels endorsed for Great Lakes and inland routes authorizes service on Great Lakes and inland routes and Rivers (except Western rivers) upon completion of 30 days of observation and training on the subordinate route.

(g) Before serving as master or mate (pilot) of towing vessels on Western rivers, the licensed mariner shall possess 90 days of observation and training and have his or her license endorsed for Western rivers.

(h) Each company must maintain evidence that every vessel it operates is under the direction and control of a licensed mariner with appropriate experience, including 30 days of observation and training on the intended route.

(i) For all inland routes, the license as pilot of towing vessels is equivalent to that as mate of towing vessels. All qualifications and equivalencies are the same.

(j) For all inland routes, the license as steersman is equivalent to that as apprentice mate. All qualifications and equivalencies are the same.

20. Revise § 10.464 to read as follows:

§ 10.464 Licenses as masters of towing vessels.

(a) For a license as master of towing vessels (unlimited), an applicant shall-

(1) Have 48 months of total service including-

(i) Eighteen months of service on deck of a towing vessel of 8 meters (at least 26 feet) or over in length while holding a license as mate (pilot) of towing vessels unlimited;

(ii) Twelve months of the 18 months, as mate (pilot) on towing vessels other than vessel assist; and

(iii) Three months of the 18 months on the particular route sought by the applicant; or

(2) (i) Have 12 months of service as mate (pilot) of towing vessels (unlimited) while holding a license as master of towing vessels (vessel assist) including 3 months of service on the particular route sought by the applicant;

(ii) Have completed the "unlimited" sections of the training-record book: and

(iii) Have passed an "unlimited" examination.

(b) For a license as master of towing vessels (vessel assist), an applicant shall-

(1) Have 48 months of total service including-

(i) Eighteen months of service on deck of a towing vessel of 8 meters (at least 26 feet) or over in length while holding a license as mate (pilot) of towing vessels;

(ii) Twelve months of the 18 months, as mate (pilot) on towing vessels conducting vessel assist; and

(iii) Three months of the 18 months on the particular route sought by the applicant: or

(2) Have 12 months of service as mate (pilot) of towing vessels (vessel assist) while holding a license as limited master of towing vessels including 3 months of service on the particular route sought by the applicant.

(c) For a license as master of towing vessels (vessel assist) endorsed for a restricted local area, an applicant shall have 36 months of total service including-

(1) Twelve months of service on deck of a towing vessel of 8 meters (at least 26 feet) or over in length as limited mate (pilot) of towing vessels; and

(2) Three months of service on the particular route sought by the applicant.

(d) The holder of a license as master of self-propelled vessels of greater than 200 gross tons and first-class pilots may obtain an endorsement for towing vessels (restricted to the service presented) if he or she-

(1) Has 30 days of training and observation on towing vessels on each of the routes for which the endorsement is sought;

(2) Submits evidence of assessment of practical demonstration of skills, in the form of a training-record book, described in § 10.304(e); and

(3) Passes an examination.

(e) The holder of a license as master of towing vessels may have a restricted endorsement, as mate (pilot) for a route not included in the current endorsements on which he or she has no operating experience, placed on his or her license after passing an examination for that route. Upon completion of 90 days of experience on that route, he or she may have the restricted endorsement removed.

21. Add § 10.465 to read as follows:

§ 10.465 Licenses as mates (pilots) of towing vessels.

(a) For a license as mate (pilot) of towing vessels (unlimited), an applicant shall-

(1) Have 30 months of total service including-

(i) Twelve months of service on deck of a towing vessel of 8 meters (at least 26 feet) or over in length while holding a license as apprentice mate (steersman): and

(ii) Three months of the 12 months on the particular route sought by the applicant:

(2) Submit either-

(i) A certificate of completion from a Coast-Guard-approved course as specified in paragraph (f) of this section; or

(ii) Evidence of assessment of practical demonstration of skills, in the form of a training-record book in accordance with § 10.304(e); or

(3) Have 30 days of service observing and training on towing vessels other than vessel assist while holding a license as master of towing vessels (vessel assist) and pass a partial examination,

(b) For a license as mate (pilot) of towing vessels (vessel assist), an applicant shall—

(1) Have 30 months of total service including-

(i) Twelve months of service on deck of a towing vessel of 8 meters (at least 26 feet) or over in length while holding a license as apprentice mate (steersman) of towing vessels; or

(ii) Thirty months of total service on vessel assist towing vessels and have passed an apprentice mate (pilot) examination;

(2) Have 3 months of the last 12 months of service on the particular route sought by the applicant; and

(3) Submit either-

(i) A certificate of completion from a Coast Guard-approved course as specified in paragraph (f) of this section;

(ii) Evidence of assessment of practical demonstration of skills, in the form of a training-record book in accordance with § 10.304(e); or

(iii) Evidence of 30 days of service observing and training on towing vessels while holding a limited license as master of towing vessels and pass a partial examination.

(c) For a license as mate (pilot) of towing vessels (vessel assist) endorsed for a restricted local area, an applicant shall-

(1) Have 24 months of total service including 6 months of service on deck of a towing vessel of 8 meters (at least 26 feet) or over in length as limited apprentice mate (steersman) of towing vessels: and

(2) Submit either-

(i) A certificate of completion from a Coast-Guard-approved course as specified in paragraph (f) of this section; or

(ii) Evidence of assessment of practical demonstration of skills, in the form of a training-record book in accordance with § 10.304(e).

(d) The holder of a license as mate of self-propelled vessels of greater than 200 gross tons may obtain an endorsement for towing vessels if he or she-

(1) Has 30 days of training and observation on towing vessels on each route for which the endorsement is requested:

(2) Submits evidence of assessment of practical demonstration of skills, in the form of a training-record book in accordance with § 10.304(e); and

(3) Passes an examination.

(e) The holder of a license as mate (pilot) of towing vessels may have a restricted endorsement, as apprentice mate (steersman) for a route not included in the current endorsements on which he or she has no operating experience, placed on his or her license after passing an examination for that route. Upon completion of 3 months of experience in that route, he or she may have the restricted endorsement removed.

(f) An accepted training course for mate (pilot) of towing vessels, whether unlimited or vessel assist, must include formal instruction and practical demonstration of proficiency either on board a towing vessel or at a shoreside training facility before a designated examiner, and must cover-

(1) Shipboard management and training:

(2) Seamanshp;

(3) Navigation;

(4) Watchkeeping;

(5) Radar;

(6) Meteorology;

(7) Maneuvering and handling of towing vessels;

(8) Engine-room basics; and

(9) Emergency procedures.

22. Redesignate § 10.466 as § 10.467 and add a new § 10.466 to read as follows:

§ 10.466 Service for apprentice mate (steersman) of towing vessels.

(a) For a license as apprentice mate (steersman) of towing vessels, an applicant shall-

(1) Have 18 months of service on deck including 12 months on towing vessels;

(2) Have 3 months of the 18 months on the particular route sought by the applicant: and

(3) Pass the examination specified in subpart I of this part.

(b) For a license as limited apprentice mate (steersman) of towing vessels, an applicant shall-

(1) Have 18 months of service on deck including 12 months on towing vessels;

(2) Have 3 months of the 18 months on the particular route sought by the applicant; and

(3) Pass the examination.

(c) The holder of a license as apprentice mate (steersman) of towing vessels may have a restricted endorsement, as limited apprentice mate (steersman) for a route not included in the current endorsements on which he or she has no operating experience, placed on his or her license

upon passing an examination for that route. Upon completion of 3 months of experience in that route, he or she may have the restricted endorsement removed.

23. In § 10.482, revise paragraph (a) to read as follows:

§ 10.482 Assistance towing.

(a) This section contains the requirements to qualify for an endorsement authorizing an applicant to engage in assistance towing. The endorsement applies to all licenses except those for master and mate (pilot) of towing vessels and those for master or mate authorizing service on inspected vessels over 200 gross tons. Holders of any of these licenses may engage in assistance towing within the scope of the licenses and without the endorsement.

* * * * *

§ 10.701 [Amended]

24. In § 10.701 (a), remove the words "operator of uninspected towing vessels" and add, in their place, the words "master or mate (pilot) of towing vessels".

§ 10.703 [Amended]

25. In § 10.703(a), remove the words "operator of uninspected towing vessels" and add, in their place, the words "master or mate (pilot) of towing vessels".

§ 10.901 [Amended]

26. In § 10.901(b)(1), remove the words "uninspected towing vessels" and add, in their place, the words "master or mate (pilot) of towing vessels".

27. In § 10.903, revise paragraphs (a) (18) and (b)(4) to read as follows:

§ 10.903 Licenses requiring examinations.

(a) * * *

(18) (i) Apprentice mate (steersman) of towing vessels:

(ii) Mate (pilot) of towing vessels, vessel assist;

* * * * *

(b) * * *

(4) Master or mate (pilot) of towing vessels (endorsed for the same route).

28. In § 10.910, revise paragraphs 10 through 12 in Table 10.910– 1 to read as follows:

§ 10.910 Subjects for deck licenses.

* * * * *

10. Apprentice mate, towing vessels, Oceans (domestic trade) and Near-coastal routes.

11. Apprentice mate (steersman), towing vessels, Great lakes and inland routes.

12. Steersman, towing vessels, Western rivers,

* * * * *

PART 15—MANNING REQUIREMENTS

29. Revise the authority citation for part 15 to read as follows:

Authority: 46 U.S.C. 2101, 2103, 3306, 3703, 8101, 8102, 8104, 8105, 8301, 8304, 8502, 8503, 8701, 8702, 8901, 8902, 8903, 8904, 8905(b), 9102; 50 U.S.C. 198; and 49 CFR 1.45 and 1.46.

§ 15.301 [Amended]

30. In § 15.301, remove paragraph (b) (6); and redesignate paragraphs (b)(7) through (10) as paragraphs (b) (6) through (9).

31. Revise section § 15.610 and its heading to read as follows:

§ 15.610 Masters and mates (pilots) of towing vessels.

Every towing vessel at least 8 meters (at least 26 feet) in length measured from end to end over the deck (excluding sheer), except a vessel described by the next sentence, must be under the direction and control of a person licensed as master or mate (pilot) of towing vessels or as master or mate of appropriate gross tonnage holding an endorsement of his or her license for towing vessels. This does not apply to any vessel engaged in assistance towing, or to any towing vessel of less than 200 gross tons engaged in the offshore mineral and oil industry if the vessel has sites or equipment of that industry as its place of departure or ultimate destination.

§ 15.705 [Amended]

32. In § 15.705(d), remove the words "individual operating an uninspected towing vessel" and add, in their place, the words "master or mate (pilot) operating a towing vessel"; and remove the words "individuals serving as operators of uninspected towing vessels" and add, in their place, the words "masters or mates (pilots) serving as operators of towing vessels".

33. In § 15.805, add paragraph (a)(5) to read as follows:

§ 15.805 Master.

(a) * * *

(5) Every towing vessel of 8 meters (at least 26 feet) or more in length.

* * * * *

34. In § 15.810, redesignate paragraphs (d) and (e) as (e) and (f) ; and add a new paragraph (d) to read as follows:

§ 15.810 Mates.

* * * * *

(d) Each person in charge of the navigation or maneuvering of a towing vessel of 8 meters (at least 26 feet) or more in length shall hold either a license authorizing service as mate of towing vessels-or, on inland routes, as pilot of towing vessels-or a license as master of appropriate gross tonnage according to the routes, endorsed for towing vessels.

* * * * *

35. Revise § 15.910 and its heading to read as follows:

§ 15.910 Towing vessels.

No person may serve as master or mate (pilot) of any towing vessel of 8 meters (at least 26 feet) or more in length unless he or she holds a license explicitly authorizing such service.

Dated: October 17, 1997.

Joseph J. Angelo,

Acting Assistant Commandant for Marine Safety and Environmental Protection.

[FR Doc. 97–28409 Filed 10–24–97; 8:45 am]

BILLING CODE 4910–14–M

FEDERAL COMMUNICATIONS COMMISSION

47 CFR Part 73

[MM Docket No. 97–68; RM–8999]

Radio Broadcasting Services; Hayfield, VA

AGENCY: Federal Communications Commission.

ACTION: Proposed rule; denial of petition,

SUMMARY: The Commission denies the petition for rule making filed by Vixon Valley Broadcasting proposing the allotment of Channel 263A to Hayfield, Virginia. See 62 FR 9409, March 3, 1997. The proposal is denied because Hayfield was found not to be a community for allotment purposes. With this action, this proceeding is terminated.

FOR FURTHER INFORMATION CONTACT: Pam Blumenthal, Mass Media Bureau, (202) 418–2180.

SUPPLEMENTARY INFORMATION: This is a synopsis of the Commission's Report and Order, MM Docket No. 97–68, adopted September 24, 1997, and released October 17, 1997. The full text of this Commission decision is available for inspection and copying during normal business hours in the FCC Reference Center (Room 239), 1919 M Street, NW, Washington, DC. The complete text of this decision may also be purchased from the Commission's copy contractor, ITS, Inc., (202) 857-3800, 1231 20th Street, NW, Washington, DC 20036.