mga research corporation

69795

NHTSA 99-5507-1

DEPT. OF TRANSPORTATION
DOCKETS
99 DEC 30 PM 12: 5

TEST REPORT
FOR THE EVALUATION OF A
1999 A. I. CRAFT GTR 2 DOOR
TO THE REQUIREMENTS OF CMVSS/FMVSS 301
FUEL SYSTEM INTEGRITY

Test Date: November 20, 1998

Report Date: December 10, 1998

MGA Job Number: C98C3-029

Rear Impact

Prepared For:
J.K. Motors
3500 Sweet Air Street
Baltimore, MD 21211

Prepared By:
MGA Research Corporation
5000 Warren Road
Burlington, WI 53105

• 5000 warren road • burlington, wi 53105 • 414/763-2705 • fax: 414/763-0934 •

SIGNATURE APPROVAL PAGE

Procedure Number: MGA FMVSS 301 Rear Impact Test Checklist dated May 13, 1998

Total Pages: 51

APPROVED BY: _____
Dave Kosloske, Project Engineer

Technicians:
John Beattie
Al Chalmers
Wayne Dahlke
Chris Kulis
Erika Miller
Erik Nelson
Chris Novak
Paul Schlimmer
Kyle Shelton
John Wistert

Secretary: Donna Janovicz

The results presented in this report relate only to the specified test items.

TABLE OF CONTENTS

		Page No.
1.0	INTRODUCTION	1-1
	1.1 Test Procedure	1-1
	1.2 Test Vehicle	1-1
	1.3 Sign Conventions	1-1
	1.4 Test Results	1-2
2.0	IMPACT DATA SUMMARY/VEHICLE MEASUREMENTS	2-1
3.0	CMVSS/FMVSS 301 ASSESSMENT DATA SUMMARY	3-1
4.0	ELECTRONIC TEST DATA	4-1
APPENDIX A - TEST PHOTOGRAPHS		A-1

TEST VEHICLE PREPARATION

Test Vehicle Delivered Weight With Maximum Fluids:

Right Front:	846 lbs.	Right Rear:	668 lbs.
Left Front:	889 lbs.	Left Rear:	661 lbs.
Total Front:	1735 lbs.	Total Rear:	1329 lbs.
Percent of Total:	56.6 %	Percent of Total:	43.4 %

Total Weight: 3064 lbs.

Calculation of Target Test Weight:

UDW (Unloaded Delivered Weight) = 3100 lbs (Supplied by J. K. Motors)

RCLW* (Rated Cargo/Luggage Weight) = 50 lbs (Supplied by J. K. Motors)

Target Test Weight = UDW + RCLW + (2 Dummies x Dummy Weight)

Target Test Weight = 3100 + 50 + 344 = 3494 lbs.

Fuel System Data:

Fuel System Capacity Supplied by J. K. Motors: 15.8 gallons

Test Volume: 14.85 gallons (94%)

Test Fluid Type: Stoddard Solvent Spec. Grav.: 0.77

Kinematic Viscosity: 1.788 centistrokes Color: Purple

List any vehicle components removed to meet target weight: Rear seat. snare tire. right tail light. front fenders. front bumper and headlights

Actual Weight of Test Vehicle:

Right Front:	1024 lbs.	Right Rear:	675 lbs.
Left Front:	996 lbs.	Left Rear:	784 lbs.
Total Front:	2020 lbs.	Total Rear:	1459 lbs.
Percent of Total:	58.1 %	Percent of Total:	41.9 %

Total Weight: 3479 lbs.

TEST VEHICLE PREPARATION (Cont.)

Ballast added to vehicle: 130 lbs in engine compartment

Vehicle Wheelbase: 2722 mm

Vehicle C.G.: 1141 mm rearward of front spindle centerline

Moving Barrier Weight:

Right Front:	1290 lbs	Right Rear:	657 lbs
Left Front:	1439 lbs	Left Rear:	609 lbs
Total Front:	2729 lbs	Total Rear:	1266 lbs

Total Weight: 3995 lbs

Door Openability:	Left Front	Yes X	No ___
	Right Front	Yes X	No ___

Crush Measurements (units in millimeters):

No.	Measurement Description	Pre-Test	Post-Test	Deform
C1	(See Diagram)	4040	3724	316
C2	(See Diagram)	4105	3774	331
C3	(See Diagram)	4122	3781	341
C4	(See Diagram)	4125	3769	356
C5	(See Diagram)	4103	3783	320
C6	(See Diagram)	4044	3750	294
L	(See Diagram)	1400	1384	16

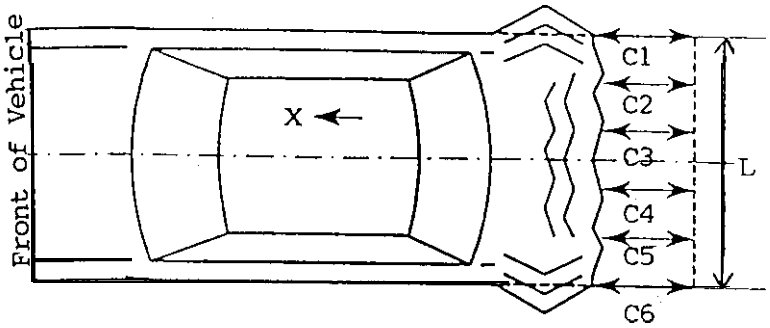

Vehicle Targeting (units in millimeters):

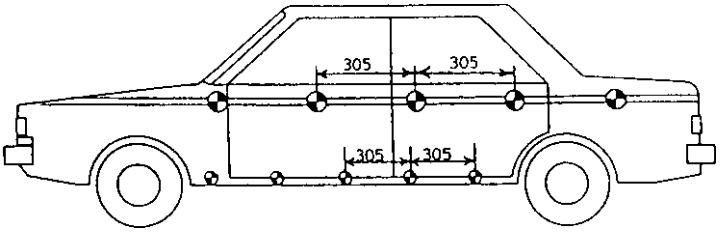

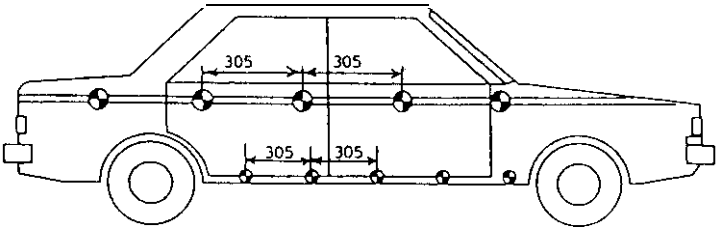

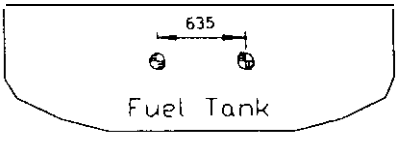

CAMERA LOCATIONS

CAMERA NO.	VIEW	CAMERA POSITIONS (mm.)*			ANGLE (deg)	LENS (mm)	SPEED (fps)
		X	Y	Z			
1	Real-Time	--	--	--	--	10	24
2	Left Impact	480	-7300	1730	90	25	1005
3	Right Overall	1330	9740	1690	90	13	1299
4	Top Overall	720	0	5000		8	1000
5	Pit Rear Half	980	0	-3130		13	1000
6	Pit Fuel Tank	1800	0	-3140		25	1005

COORDINATES:

* X = film plane to vehicle's rear bumper, forward is positive

Y = film plane to monorail centerline, right is positive

Z = film plane to ground, up is positive

ORIGIN: For X and Y it is the Impact Point. For Z it is the Floor.

CAMERA LOCATIONS (Cont.)

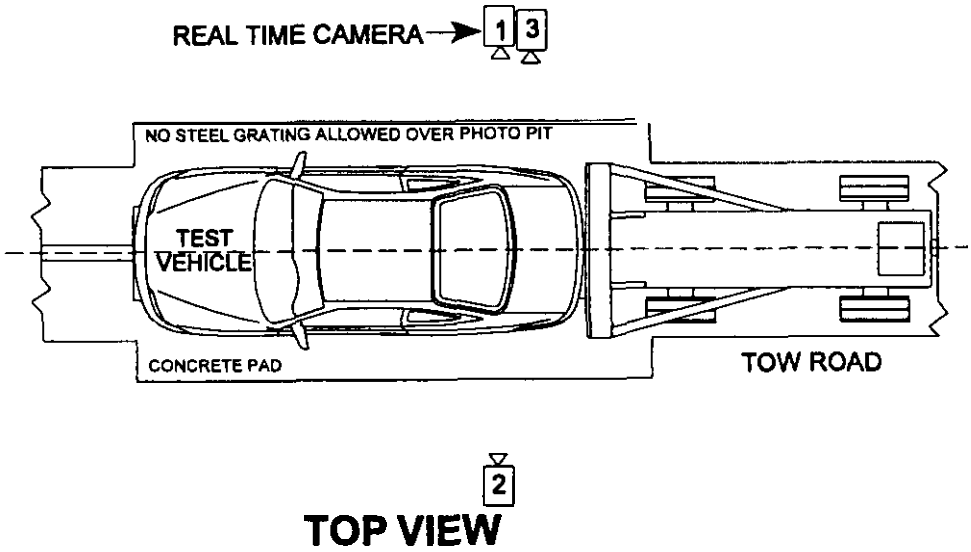

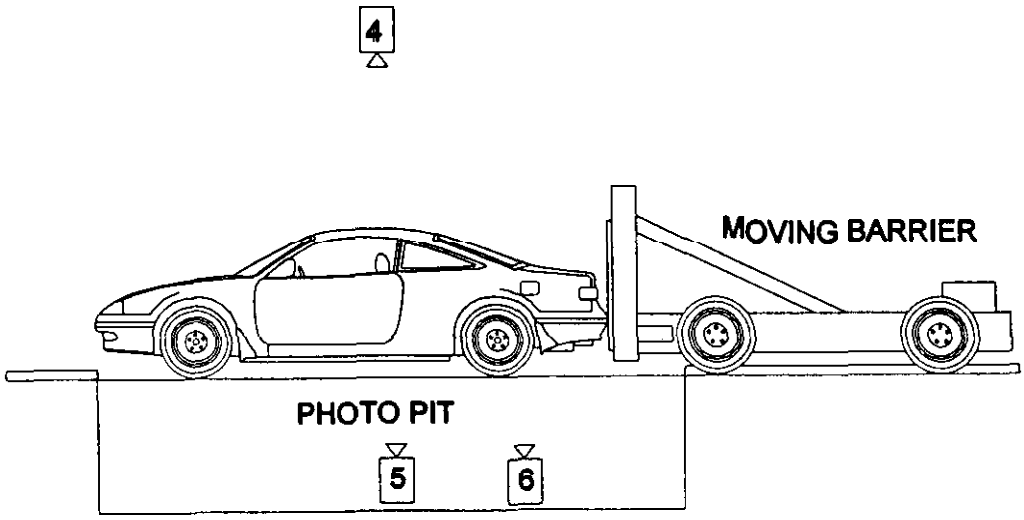

3.0 CMVSS/FMVSS 301 ASSESSMENT DATA SUMMARY

1. FUEL SPILLAGE MEASUREMENT (First 25 minutes):

	ACTUAL	MAX. ALLOW.
1. From impact until vehicle motion ceases	0	1 oz.
2. For 5 minute period after vehicle motion ceases	0	1 oz.
3. For next 25 minutes	0	1 oz./min

SOLVENT SPILLAGE DETAILS: None

2. FUEL SPILLAGE MEASUREMENT (0° - 90°):

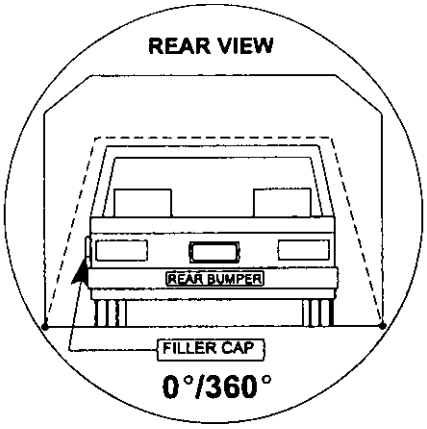

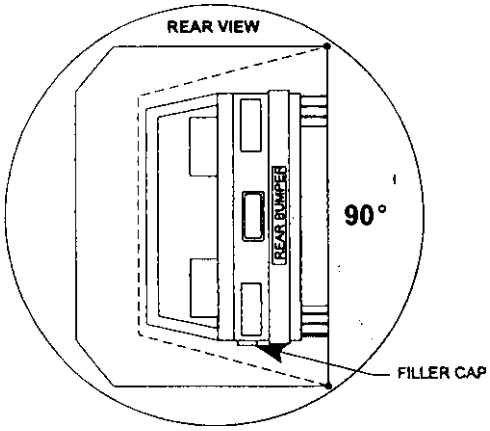

A. Determination of Solvent Collection Time Period:

Rollover Fixture 90° Rotation Time: (Spec. Range = 1 to 3 minutes)		2 min.	48 sec
Position Hold Time:	+	5 min.	0 sec.
TOTAL		7 min.	48 sec.
Next Whole Minute Interval		8 minutes	

B. CMVSS/FMVSS 301 Requirements and Actual Test Vehicle Solvent Spillage:

Time Period:

	Actual	Max. Allowable
1. First 5 min. FROM onset of rotation	0	5 oz.
2. 6th minute	0	1 oz.
2. 7th minute	0	1 oz.
3. 8th minute (if req'd)	0	1 oz.

NOTE: Record spillage for whole minute intervals only as determined above.

Solvent Spillage Location(s): None

3 FUEL SPILLAGE MEASUREMENT (90° - 180°):

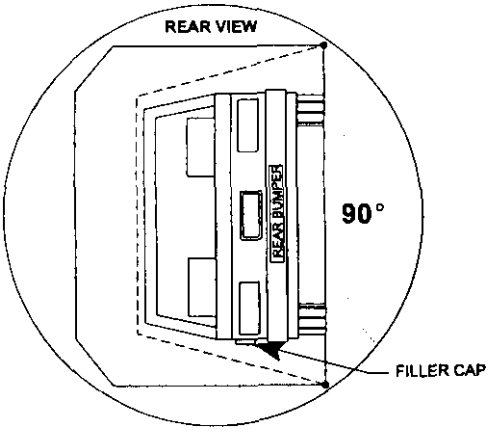

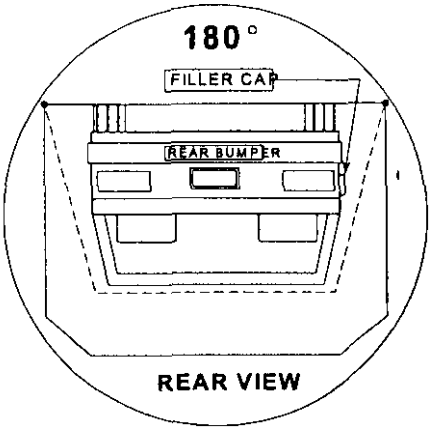

A. Determination of Solvent Collection Time Period:

Rollover Fixture 90° Rotation Time: (Spec. Range = 1 to 3 minutes)		2 min.	16 sec.
Position Hold Time:	+	5 min.	0 sec.
TOTAL		7 min.	16 sec.
Next Whole Minute Interval		8 minutes	

B. CMVSS/FMVSS 301 Requirements and Actual Test Vehicle Solvent Spillage:

Time Period:

	Actual	Max. Allowable
1. First 5 min. FROM onset of rotation	0	5 oz.
2. 6th minute	0	1 oz.
2. 7th minute	0	1 oz.
3. 8th minute (if req'd)	0	1 oz.

NOTE: Record spillage for whole minute intervals only as determined above.

Solvent Spillage Location(s): None

4. FUEL SPILLAGE MEASUREMENT (180° - 270°):

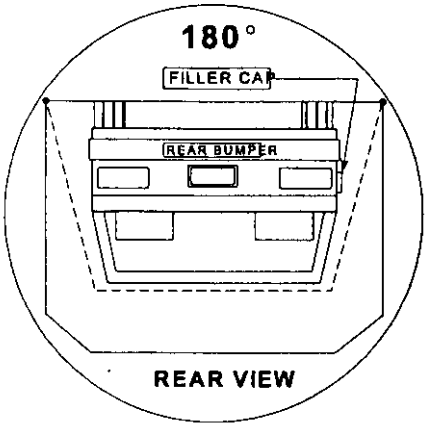

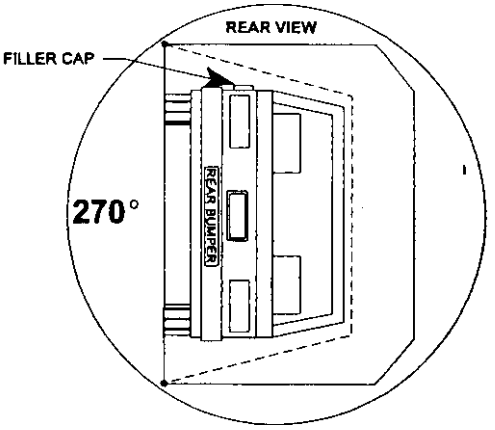

A. Determination of Solvent Collection Time Period:

Rollover Fixture 90° Rotation Time: (Spec. Range = 1 to 3 minutes)		2 min.	25 sec.
Position Hold Time:	+	5 min.	0 sec.
TOTAL		7 min.	25 sec.
Next Whole Minute Interval		8 minutes	

B. CMVSS/FMVSS 301 Requirements and Actual Test Vehicle Solvent Spillage:

Time Period:

	Actual	Max. Allowable
1. First 5 min. FROM onset of rotation	0	5 oz.
2. 6th minute	0	1 oz.
2. 7th minute	0	1 oz.
3. 8th minute (if req'd)	0	1 oz.

NOTE: Record spillage for whole minute intervals only as determined above.

Solvent Spillage Location(s): None

5. FUEL SPILLAGE MEASUREMENT (270° - 360°):

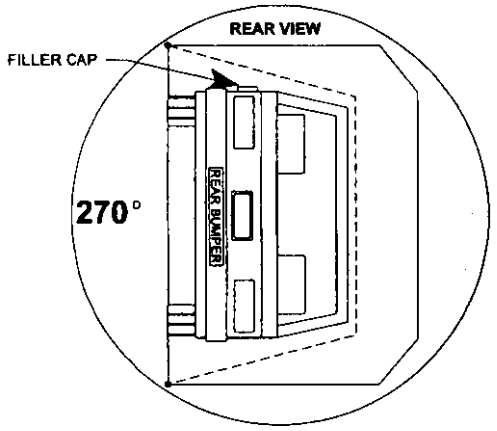

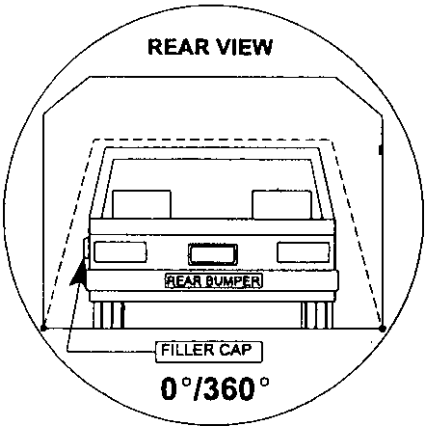

A. Determination of Solvent Collection Time Period:

Rollover Fixture 90° Rotation Time: (Spec. Range = 1 to 3 minutes)		2 min.	51 sec.
Position Hold Time:	+	5 min.	0 sec.
TOTAL		7 min.	51 sec.
Next Whole Minute Interval		8 minutes	

B. CMVSS/FMVSS 301 Requirements and Actual Test Vehicle Solvent Spillage:

Time Period:

	Actual	Max. Allowable
1. First 5 min. FROM onset of rotation	0	5 oz.
2. 6th minute	0	1 oz.
2. 7th minute	0	1 oz.
3. 8th minute (if req'd)	0	1 oz.

NOTE: Record spillage for whole minute intervals only as determined above.

Solvent Spillage Location(s): None

4.0 ELECTRONIC TEST DATA

Table of Figures

	Page No.
Figure 4-1 - Left B-Post X Acceleration vs. Time	4-2
Figure 4-2 - Left B-Post X Velocity vs. Time	4-3
Figure 4-3 - Left B-Post X Displacement vs. Time	4-4
Figure 4-4 - Right B-Post X Acceleration vs. Time	4-5
Figure 4-5 - Right B-Post X Velocity vs. Time	4-6
Figure 4-6 - Right B-Post X Displacement vs. Time	4-7
Figure 4-7 - Cart Left Rail X Acceleration vs. Time	4-8
Figure 4-8 - Cart Left Rail X Velocity vs. Time	4-9
Figure 4-9 - Cart Left Rail X Displacement vs. Time	4-10
Figure 4-10 - Cart Right Rail X Acceleration vs. Time	4-11
Figure 4-11 - Cart Right Rail X Velocity vs. Time	4-12
Figure 4-12 - Cart Right Rail X Displacement vs. Time	4-13

TEST: 30 MPH REAR IMPACT | TEST DATE: 11-20-1998

COMPONENT: 1999 A I CRAFT GTR | Speed: 29.72 MPH 47.8 KPH

Minimum = -1.8 G'S at 54 msec | Maximum = 22.99 G'S at 22 msec

LEFT B-POST X ACCELERATION

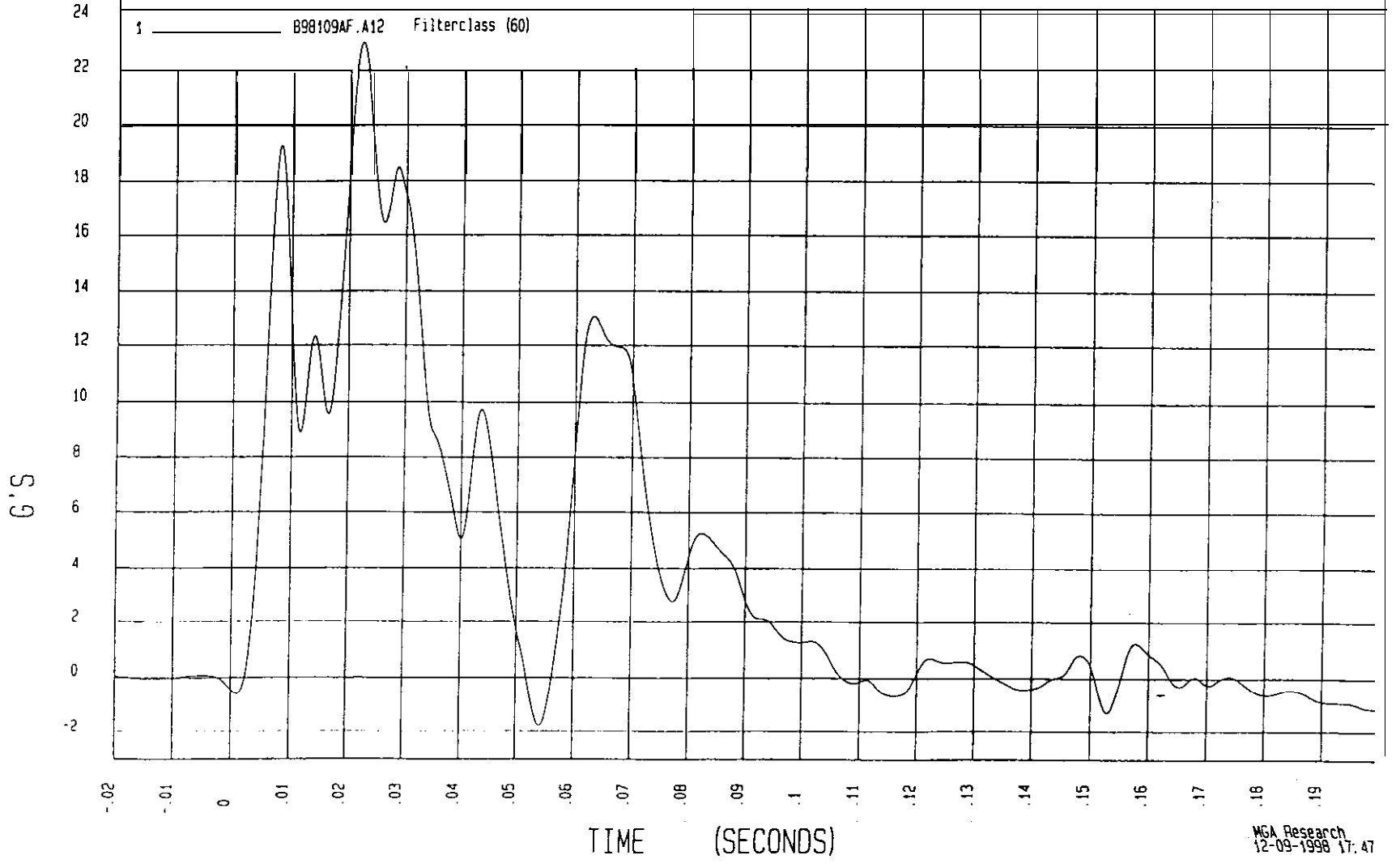

MGA Research
12-09-1998 17:47

TEST: 30 MPH REAR IMPACT TEST DATE: 11-20-1998

COMPONENT: 1999 A I CRAFT GTR Speed: 29.72 M P H 47.8 KPH

Minimum = 0 KPH at -9 msec Maximum = 28.67 KPH at 163 msec

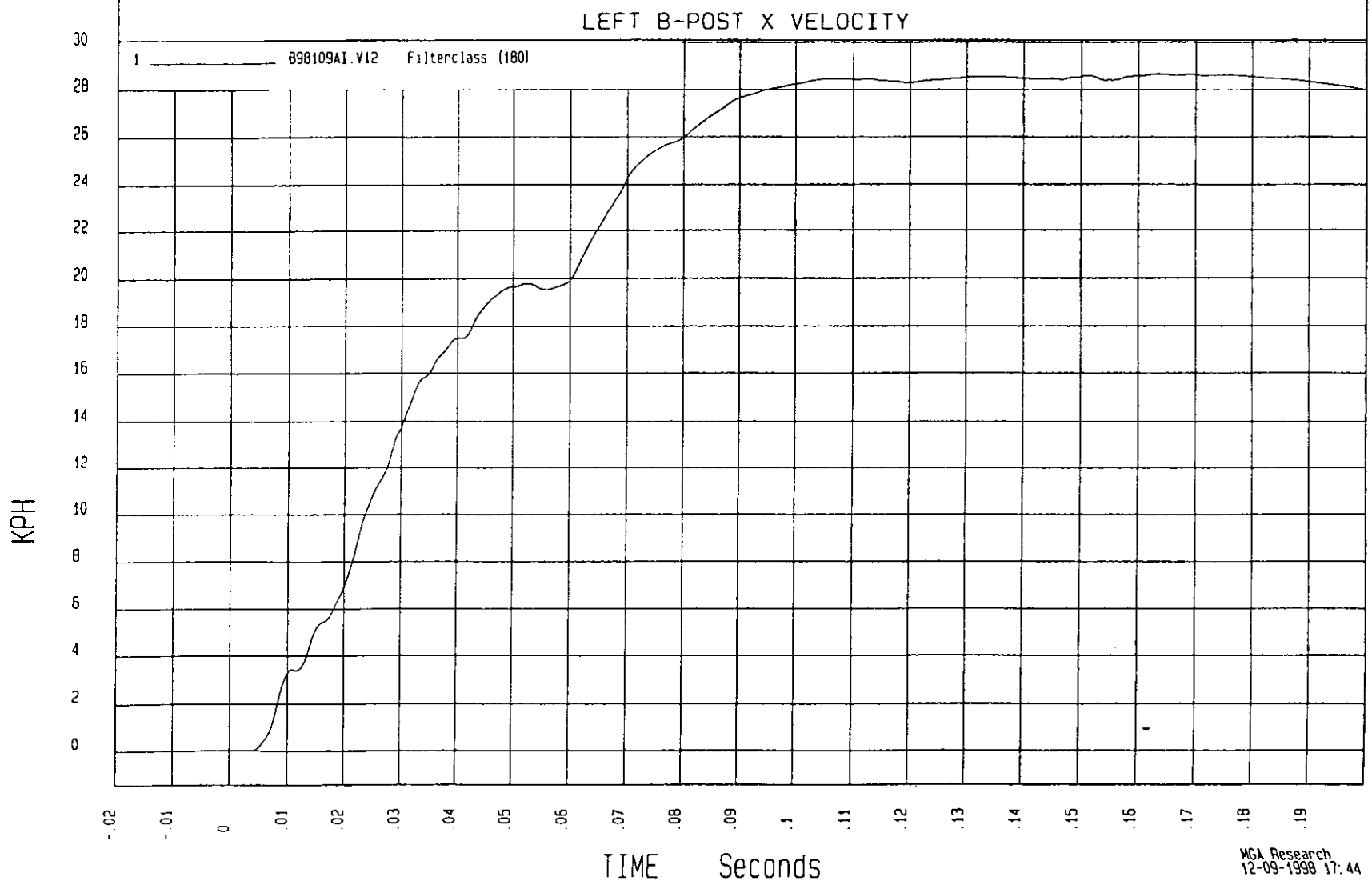

MGA Research
12-09-1998 17:44

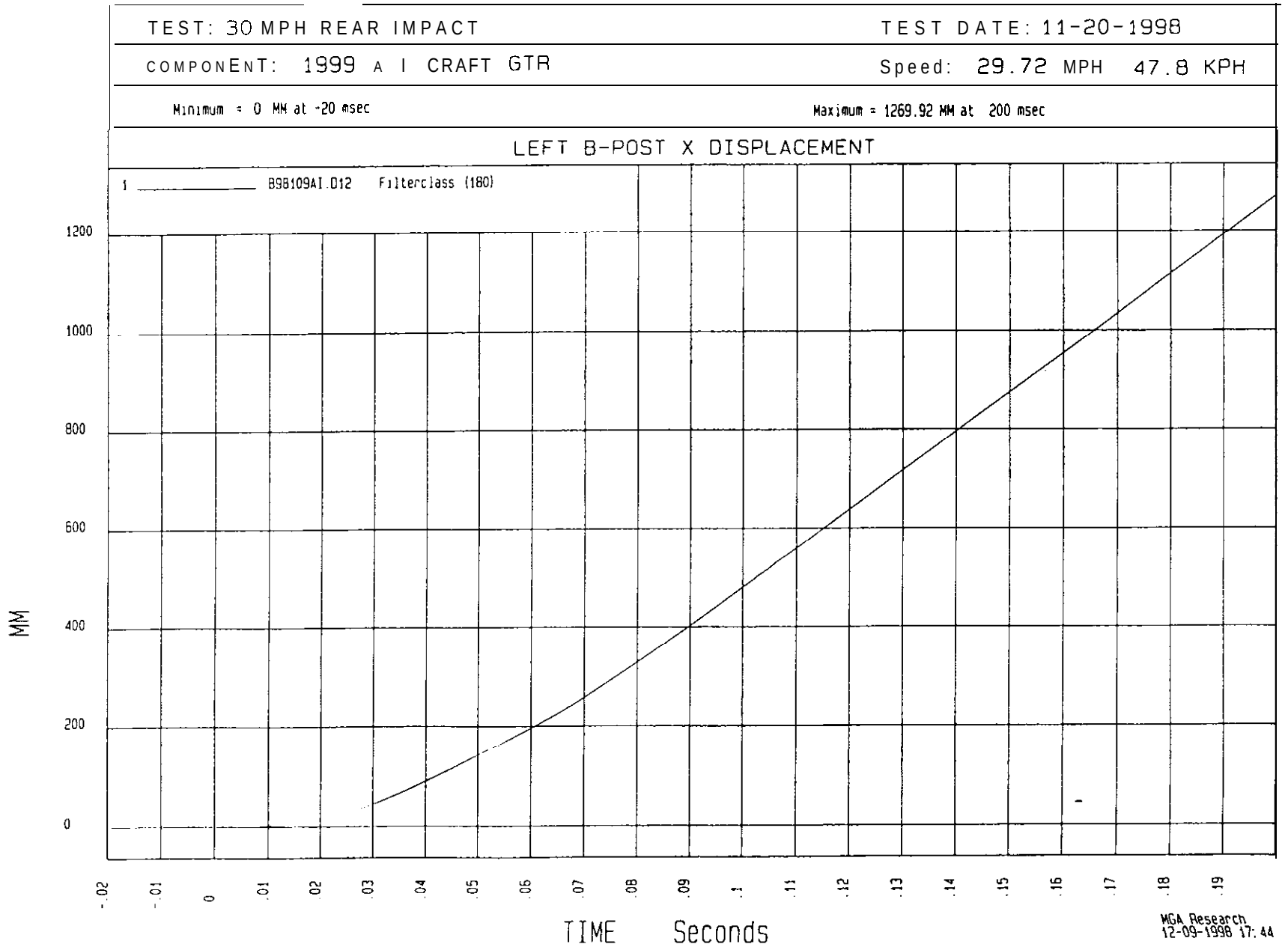
TEST: 30 MPH REAR IMPACT
TEST DATE: 11-20-1998
COMPONENT: 1999 A I CRAFT GTR
Speed: 29.72 MPH 47.8 KPH
Minimum = 0 MM at -20 msec
Maximum = 1269.92 MM at 200 msec
LEFT B-POST X DISPLACEMENT
1 B98109AI.D12 Filterclass (180)
MM
1200
1000
800
600
400
200
0
-.02
-.01
0
.01
.02
.03
.04
.05
.06
.07
.08
.09
.1
.11
.12
.13
.14
.15
.16
.17
.18
.19
TIME Seconds
MGA Research
12-09-1998 17:44

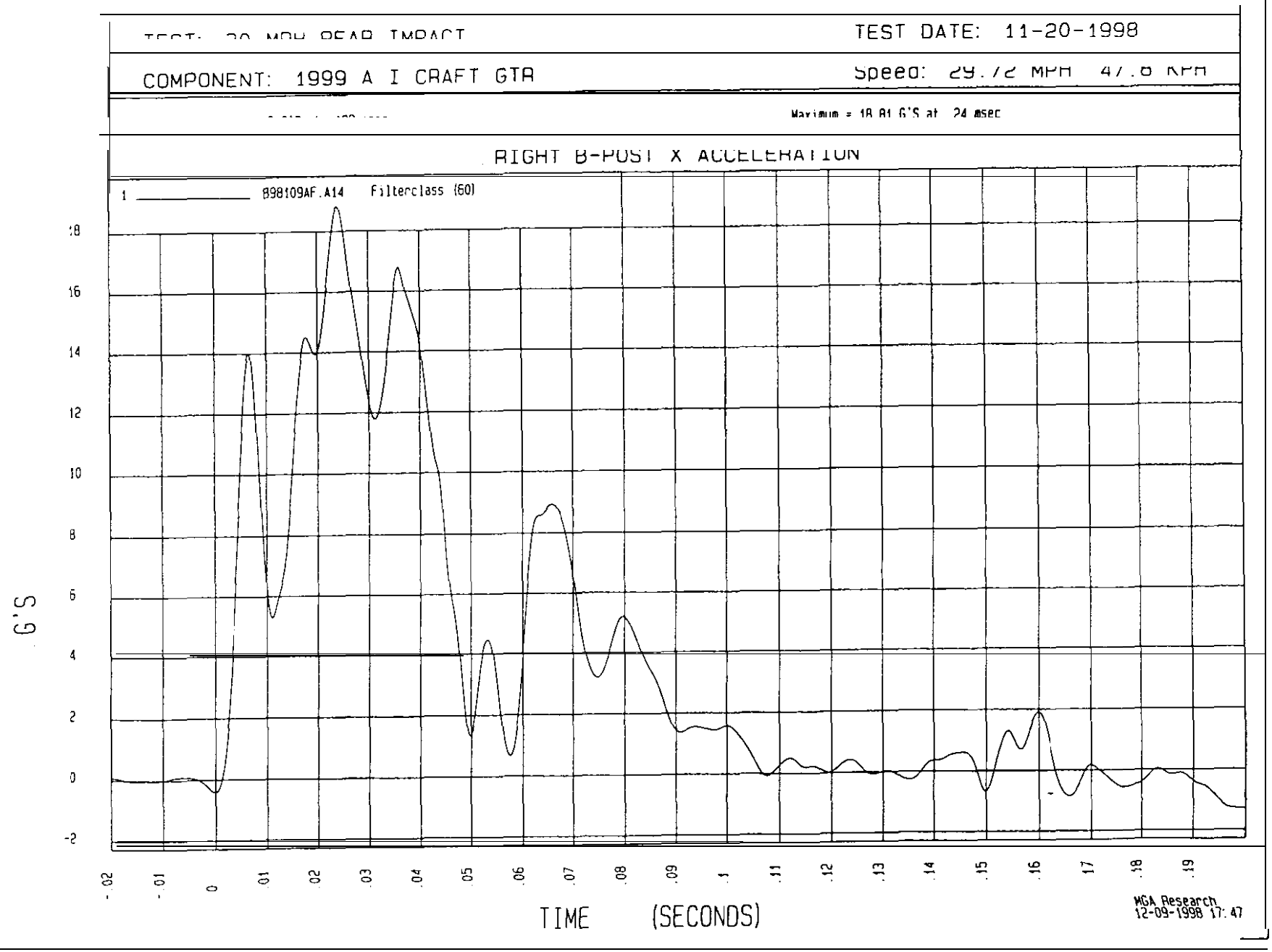
TEST: 30 MPH REAR IMPACT
TEST DATE: 11-20-1998
COMPONENT: 1999 A I CRAFT GTR
Speed: 29.72 MPH 47.8 KPH
Maximum = 18.81 G'S at 24 msec
RIGHT B-POST X ACCELERATION
1 898109AF.A14 Filterclass (60)
G'S
18
16
14
12
10
8
6
4
2
0
-2
-.02
-.01
0
.01
.02
.03
.04
.05
.06
.07
.08
.09
.1
.11
.12
.13
.14
.15
.16
.17
.18
.19
TIME (SECONDS)
MGA Research
12-09-1998 17:47

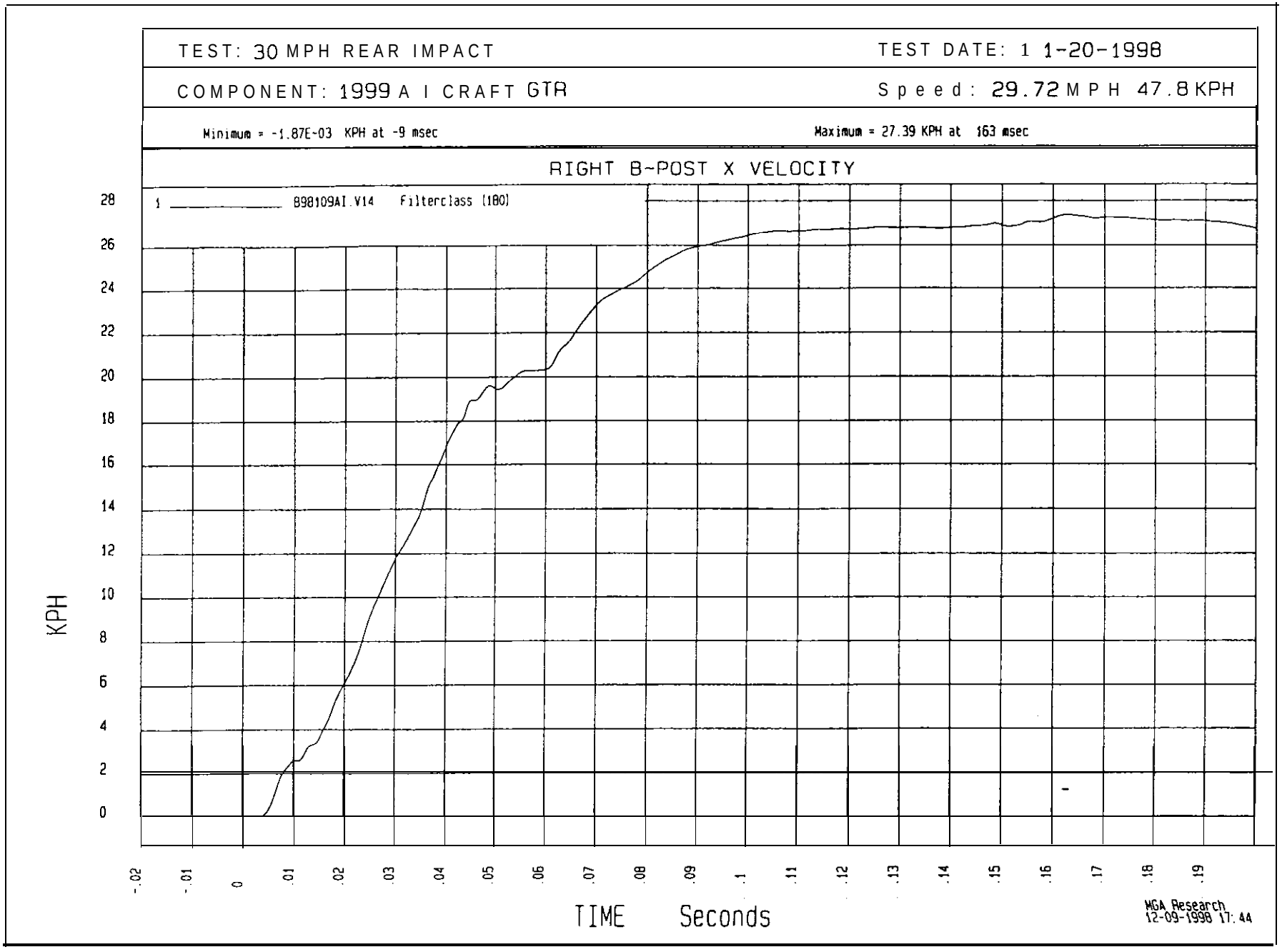
TEST: 30 MPH REAR IMPACT
TEST DATE: 1 1-20-1998
COMPONENT: 1999 A I CRAFT GTR
Speed: 29.72 MPH 47.8 KPH
Minimum = -1.87E-03 KPH at -9 msec
Maximum = 27.39 KPH at 163 msec
RIGHT B-POST X VELOCITY
1 898109AI.V14 Filterclass (180)
KPH
28
26
24
22
20
18
16
14
12
10
8
6
4
2
0
-.02
-.01
0
.01
.02
.03
.04
.05
.06
.07
.08
.09
.1
.11
.12
.13
.14
.15
.16
.17
.18
.19
TIME Seconds
MGA Research
12-09-1998 17:44

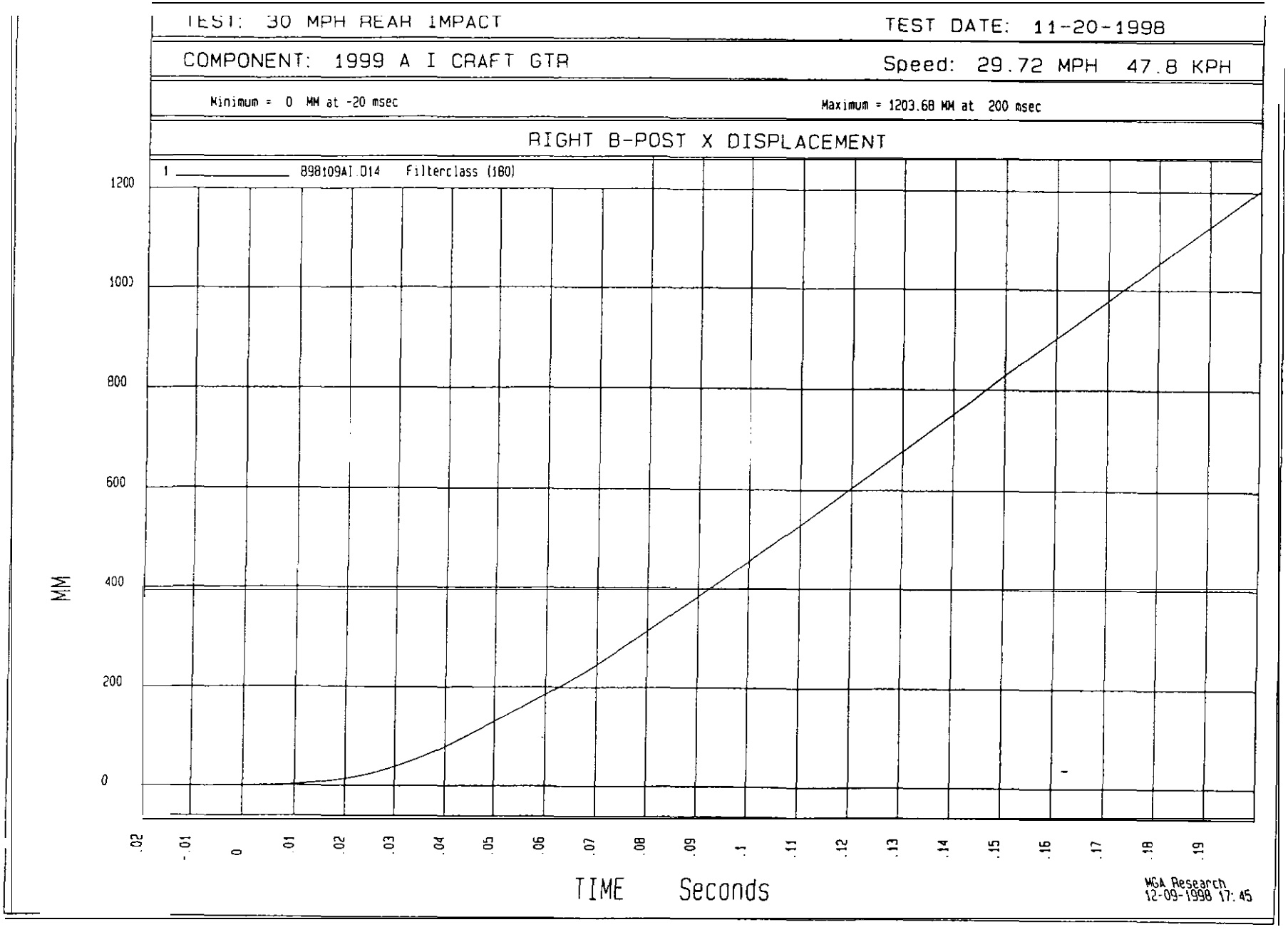
TEST: 30 MPH REAR IMPACT
TEST DATE: 11-20-1998
COMPONENT: 1999 A I CRAFT GTR
Speed: 29.72 MPH 47.8 KPH
Minimum = 0 MM at -20 msec
Maximum = 1203.68 MM at 200 msec
RIGHT B-POST X DISPLACEMENT
1 898109AI.D14 Filterclass (180)
MM
1200
1000
800
600
400
200
0
-.02
-.01
0
.01
.02
.03
.04
.05
.06
.07
.08
.09
.1
.11
.12
.13
.14
.15
.16
.17
.18
.19
TIME Seconds
MGA Research
12-09-1998 17:45

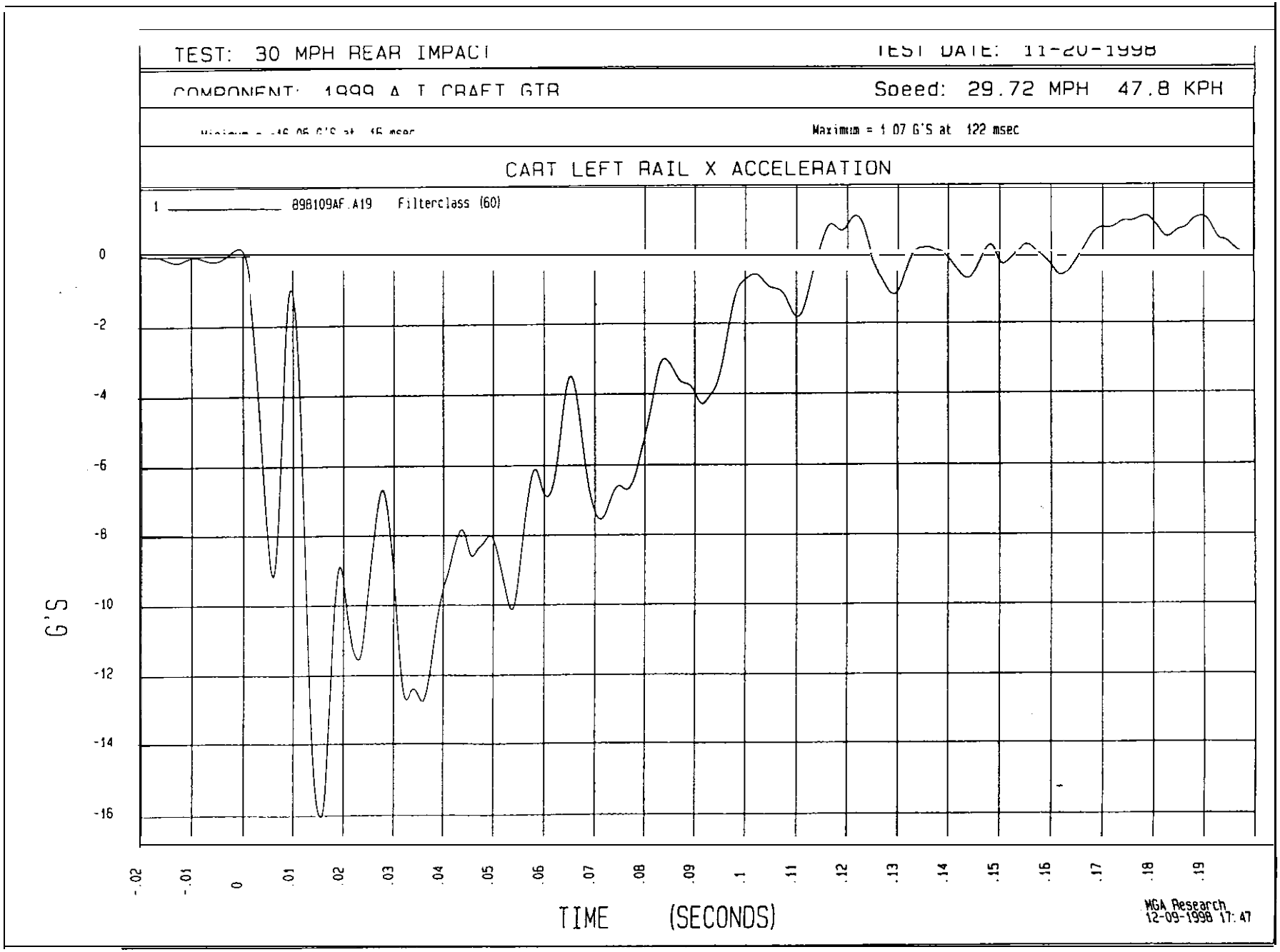
TEST: 30 MPH REAR IMPACT
TEST DATE: 11-20-1998
COMPONENT: 1999 A T CRAFT GTR
Speed: 29.72 MPH 47.8 KPH
Maximum = 1.07 G'S at 122 msec
CART LEFT RAIL X ACCELERATION
1 898109AF.A19 Filterclass (60)
G'S
0
-2
-4
-6
-8
-10
-12
-14
-16
-.02
-.01
0
.01
.02
.03
.04
.05
.06
.07
.08
.09
.1
.11
.12
.13
.14
.15
.16
.17
.18
.19
TIME (SECONDS)
MGA Research
12-09-1998 17:47

TEST: 30 MPH REAR IMPACT TEST DATE: 11-20-1998

COMPONENT: 1999 A I CRAFT GTR Speed: 29.72 MPH 47.8 KPH

Minimum = 22.02 KPH at 166 msec Maximum = 47.8 KPH at -20 msec

CART LEFT RAIL X VELOCITY

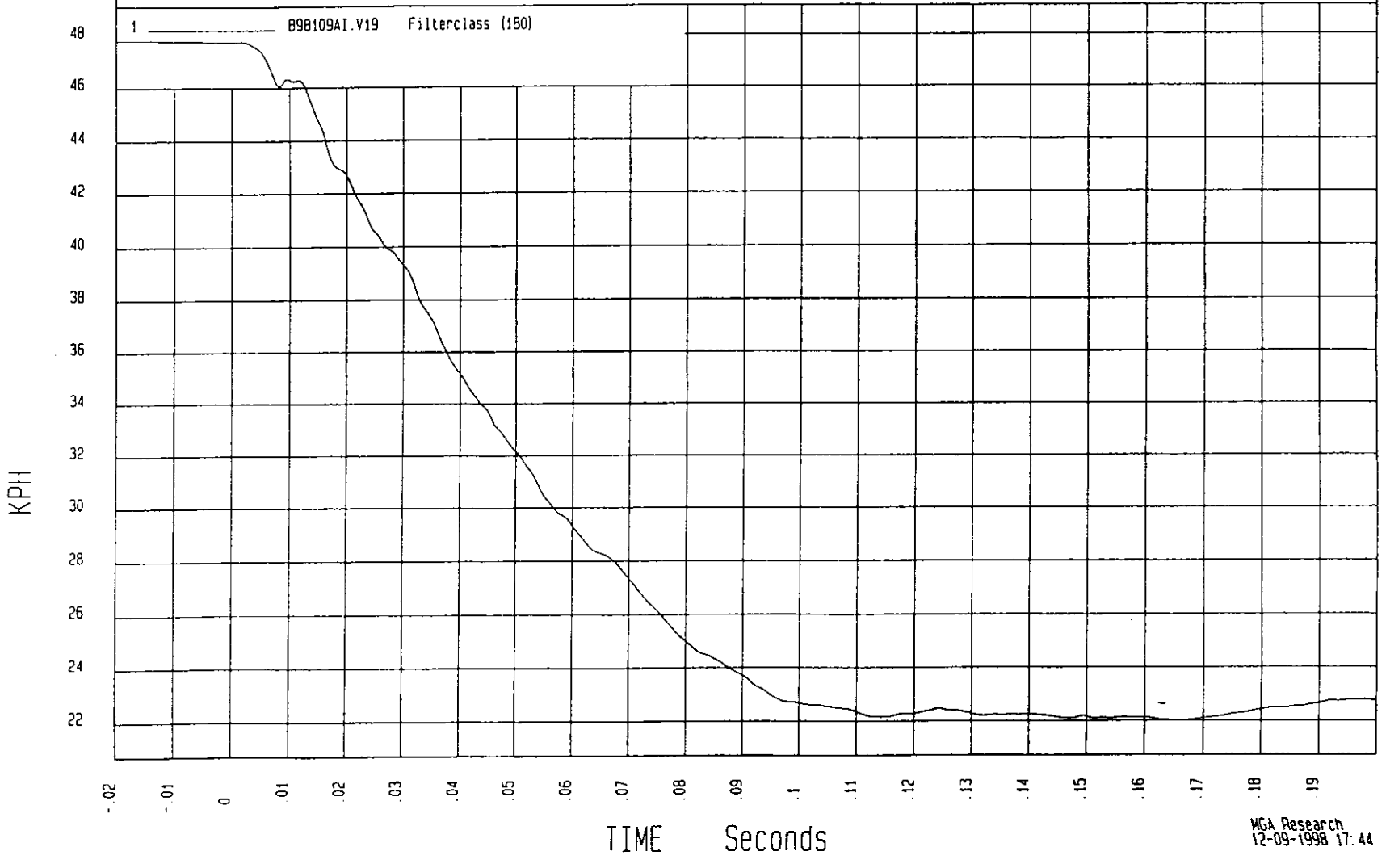

MGA Research
12-09-1998 17:44

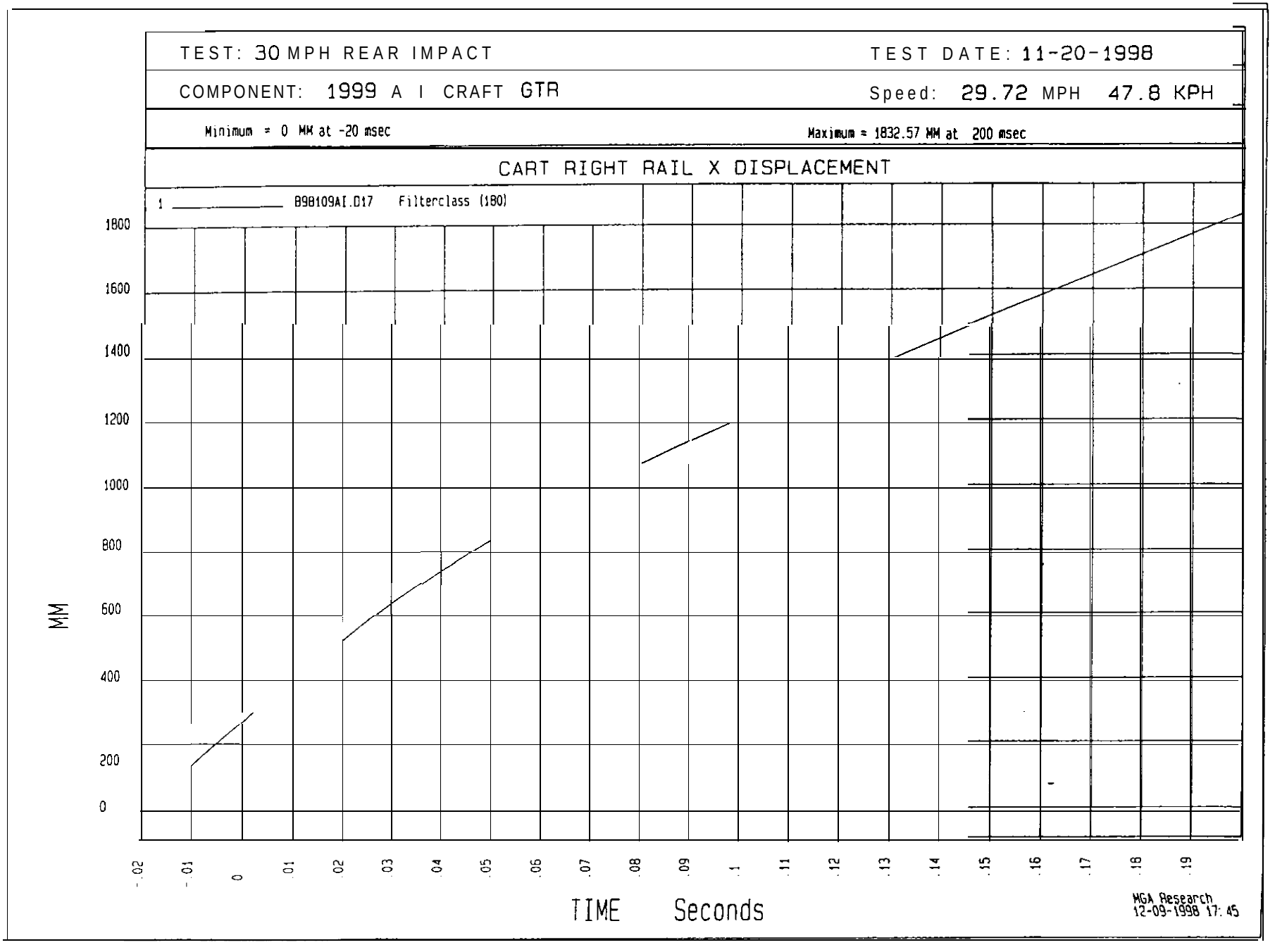
TEST: 30 MPH REAR IMPACT
TEST DATE: 11-20-1998
COMPONENT: 1999 A I CRAFT GTR
Speed: 29.72 MPH 47.8 KPH
Minimum = 0 MM at -20 msec
Maximum = 1832.57 MM at 200 msec
CART RIGHT RAIL X DISPLACEMENT
1 B98109AI.D17 Filterclass (180)
MM
1800
1600
1400
1200
1000
800
600
400
200
0
-.02
-.01
0
.01
.02
.03
.04
.05
.06
.07
.08
.09
.1
.11
.12
.13
.14
.15
.16
.17
.18
.19
TIME Seconds
MGA Research
12-09-1998 17:45

TEST: 30 MPH REAR IMPACT TEST DATE: 11-20-1998

COMPONENT: 1999 A I CRAFT GTR Speed: 29.72 M P H 47.8 KPH

Minimum = -11.6 G'S at 14 msec Maximum = 1.43 G'S at 108 msec

CART RIGHT RAIL X ACCELERATION

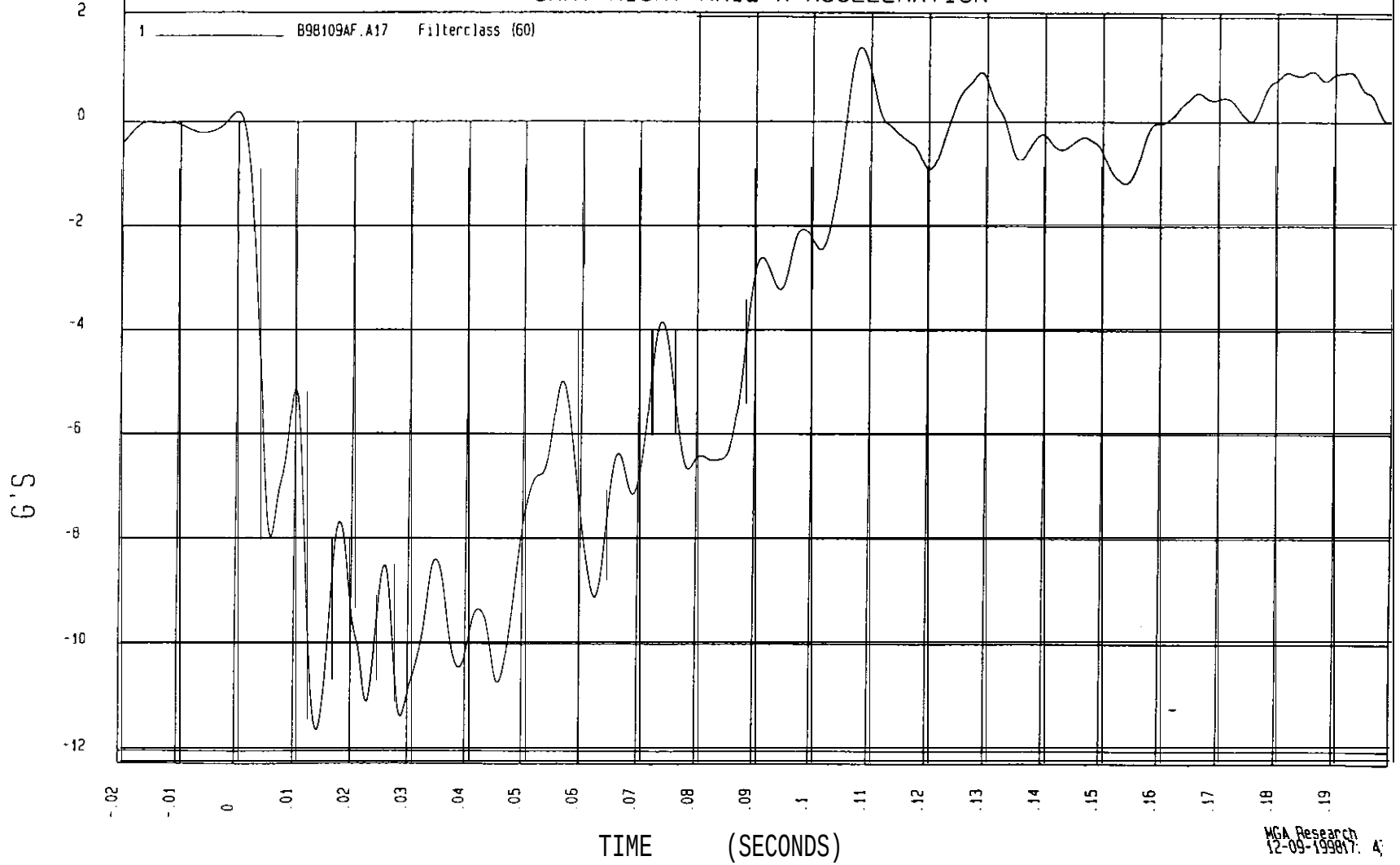

MGA Research
12-09-199817: 4

TEST: 30 MPH REAR IMPACT | TEST DATE: 11-20-1998

COMPONENT: 1999 A I CRAFT GTR | Speed: 29.72 MPH 47.8 KPH

Minimum = 22.11 KPH at 161 msec | Maximum = 47.8 KPH at -20 msec

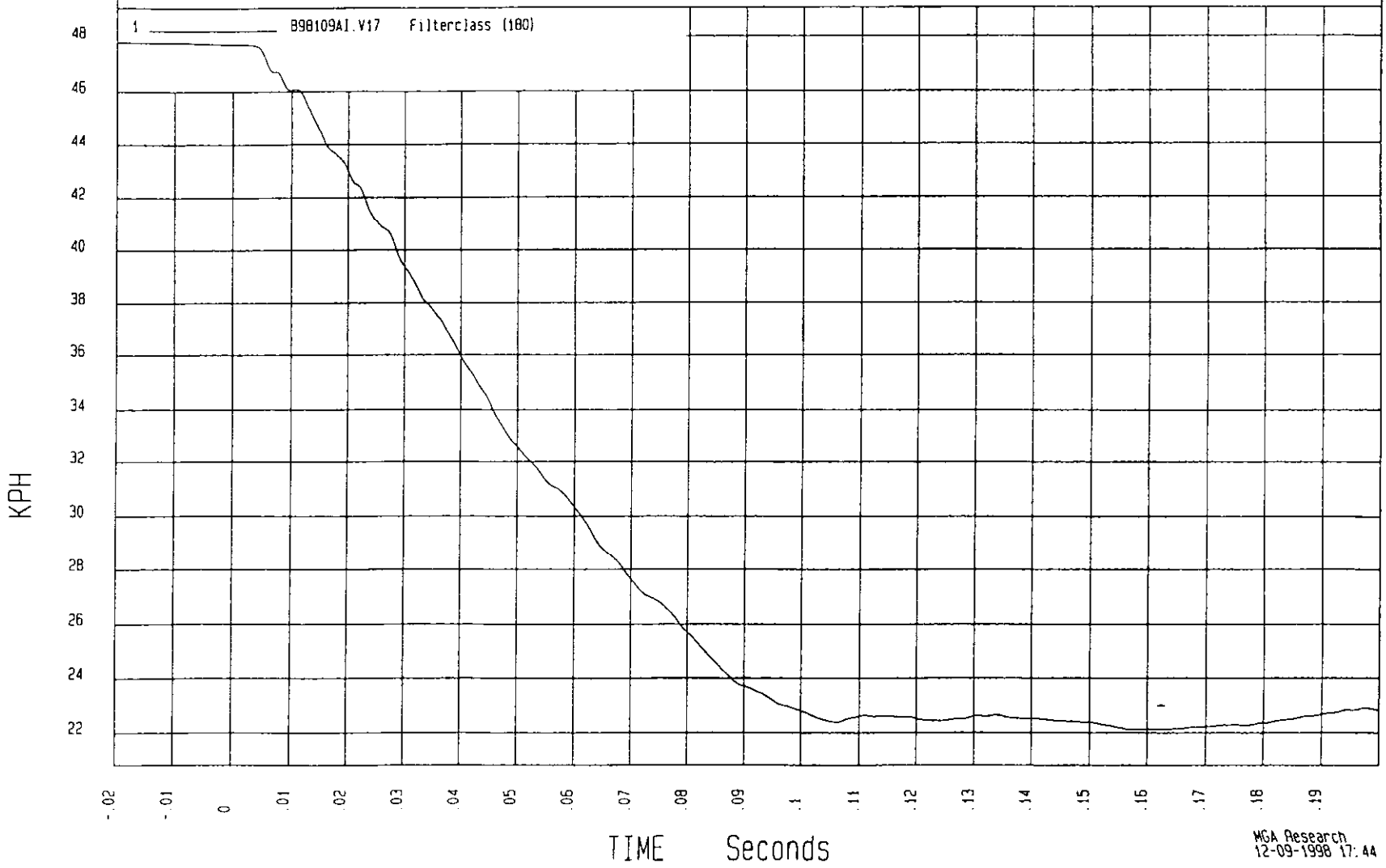

TEST: 30 MPH REAR IMPACT | TEST DATE: 11-20-1998

COMPONENT: 1999 A I CRAFT GTR | Speed: 29.72 MPH 47.8 KPH

Minimum = 0 MM at -20 msec | Maximum = 1817.29 MM at 200 msec

CART LEFT RAIL X DISPLACEMENT

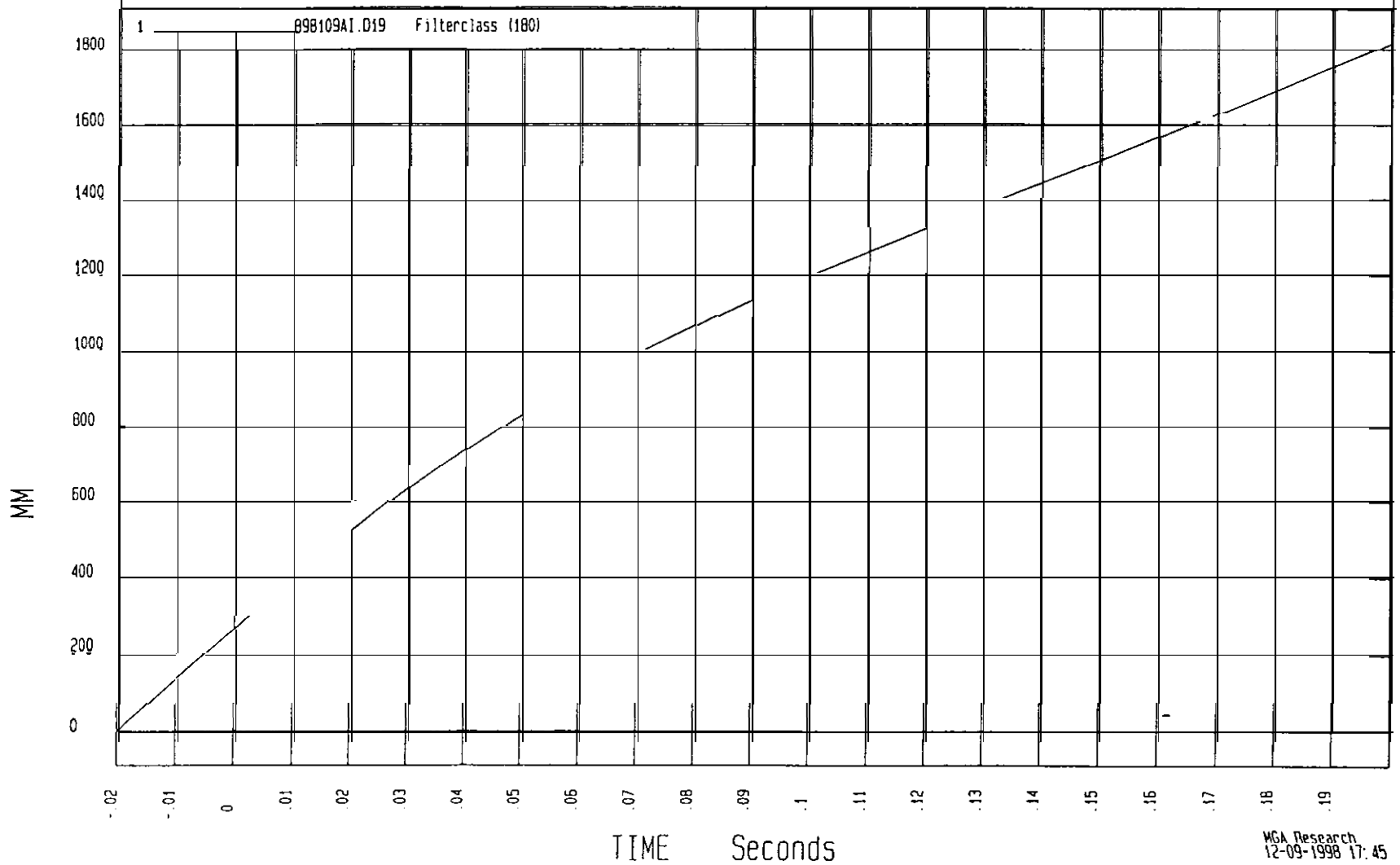

MGA Research
12-09-1998 17:45

APPENDIX A

TEST PHOTOGRAPHS

Table of Photographs

	Page No.
Photo No. A-l - Pre-Test Front View of Test Vehicle	A-1
Photo No. A-2 - Post-Test Front View of Test Vehicle	A-l
Photo No. A-3 - Pre-Test Left Side View of Test Vehicle	A-2
Photo No. A-4 - Post-Test Left Side View of Test Vehicle	A-2
Photo No. A-5 - Pre-Test Left Rear 3/4 View of Test Vehicle	A-3
Photo No. A-6 - Post-Test Left Rear 3/4 View of Test Vehicle	A-3
Photo No. A-7 - Pre-Test Right Side View of Test Vehicle	A-4
Photo No. A-8 Post-Test Right Side View of Test Vehicle	A-4
Photo No. A-9 - Pre-Test Right Front 3/4 View of Test Vehicle	A-5
Photo No. A-10 - Post-Test Right Front 3/4 View of Test Vehicle	A-5
Photo No. A-l 1 - Pre-Test Right Rear 3/4 View of Test Vehicle	A-6
Photo No. A-12 - Post-Test Right Rear 3/4 View of Test Vehicle	A-6
Photo No. A-13 - Pre-Test Rear View of Test Vehicle	A-7
Photo No. A-14 - Post-Test Rear View of Test Vehicle	A-7
Photo No. A-15 - Vehicle Impact	A-8
Photo No. A-16 - Pre-Test Driver Dummy Right Side View	A-9
Photo No. A-17 - Post-Test Driver Dummy Right Side View	A-9
Photo No. A-l 8 - Pre-Test Driver Dummy Right Side View (Door Open)	A-10
Photo No. A-19 - Post-Test Driver Dummy Right Side View (Door Open)	A-10
Photo No. A-20 Pre-Test Passenger Dummy Left Side View	A-11
Photo No. A-21 - Post-Test Passenger Dummy Left Side View	A-l 1
Photo No. A-22 - Pre-Test Passenger Dummy Left Side View (Door Open)	A-12
Photo No. A-23 - Post-Test Passenger Dummy Left Side View (Door Open)	A-12
Photo No. A-24 - Pre-Test Windshield View	A-13
Photo No. A-25 - Post-Test Windshield View	A-13
Photo No. A-26 - Pre-Test Engine Compartment View	A-14
Photo No. A-27 - Pre-Test Fuel Cap View	A-14

Table of Photographs (Cont.)

	Page No.
Photo No. A-28 - 0° - 90° Rollover	A-15
Photo No. A-29 - 90° - 180° Rollover	A-15
Photo No. A-30 - 180° - 270° Rollover	A-16
Photo No. A-31 - 270° - 360° Rollover	A-16
Photo No. A-32 - Pre-Test Front Underbody View	A-17
Photo No. A-33 - Post-Test Front Underbody View	A-17
Photo No. A-34 - Pre-Test Rear Underbody View	A-18
Photo No. A-35 - Post-Test Rear Underbody View	A-18

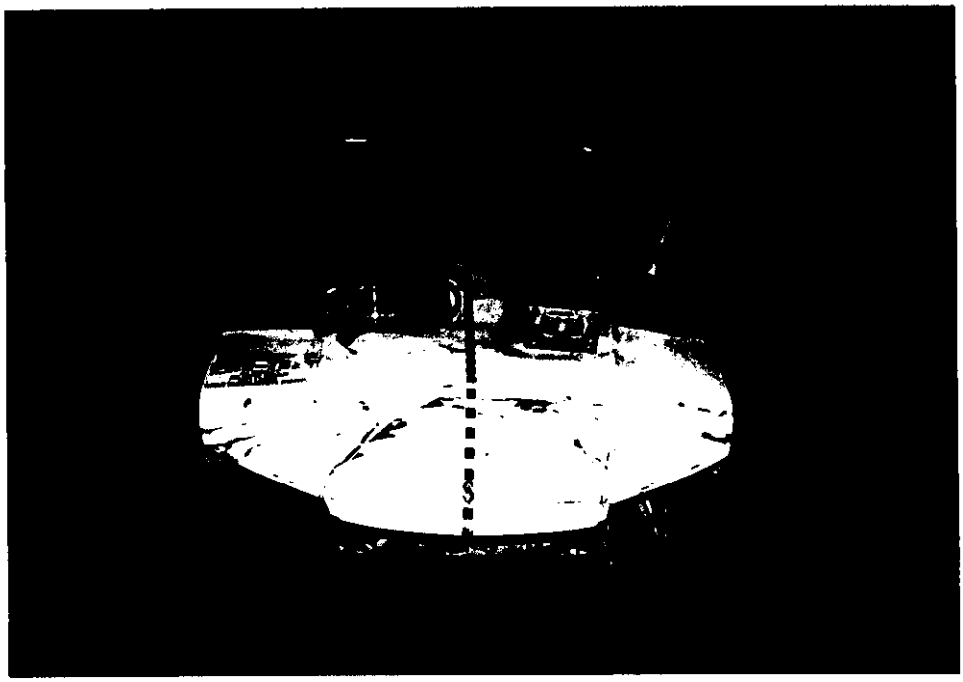

Photo No. A-l - Pre-Test Front View of Test Vehicle

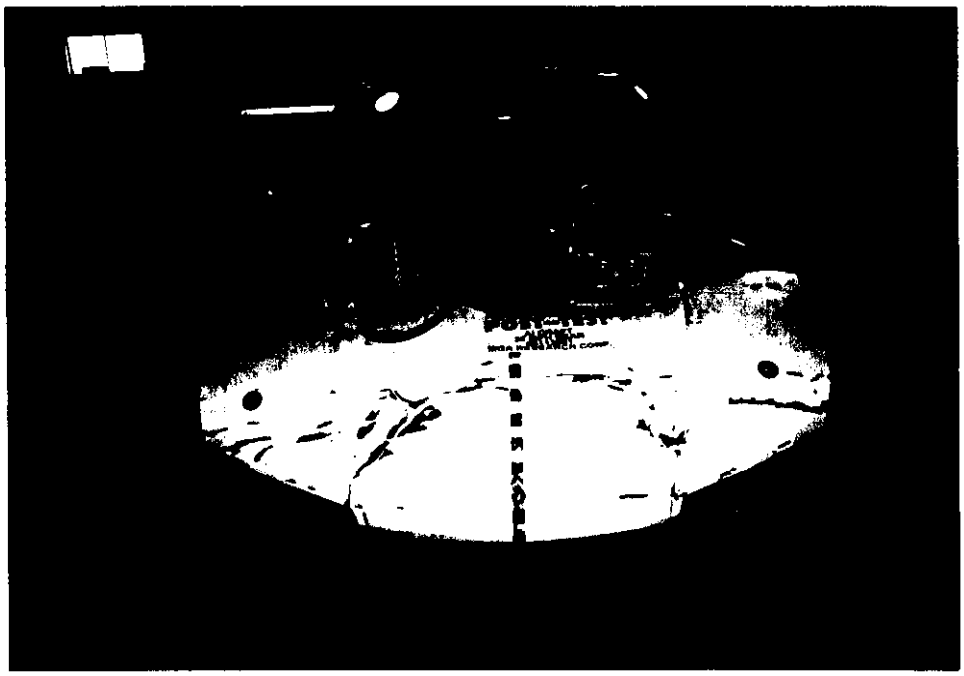

Photo No. A-2 - Post-Test Front View of Test Vehicle

Photo No. A-3 - Pre-Test Left Side View of Test Vehicle

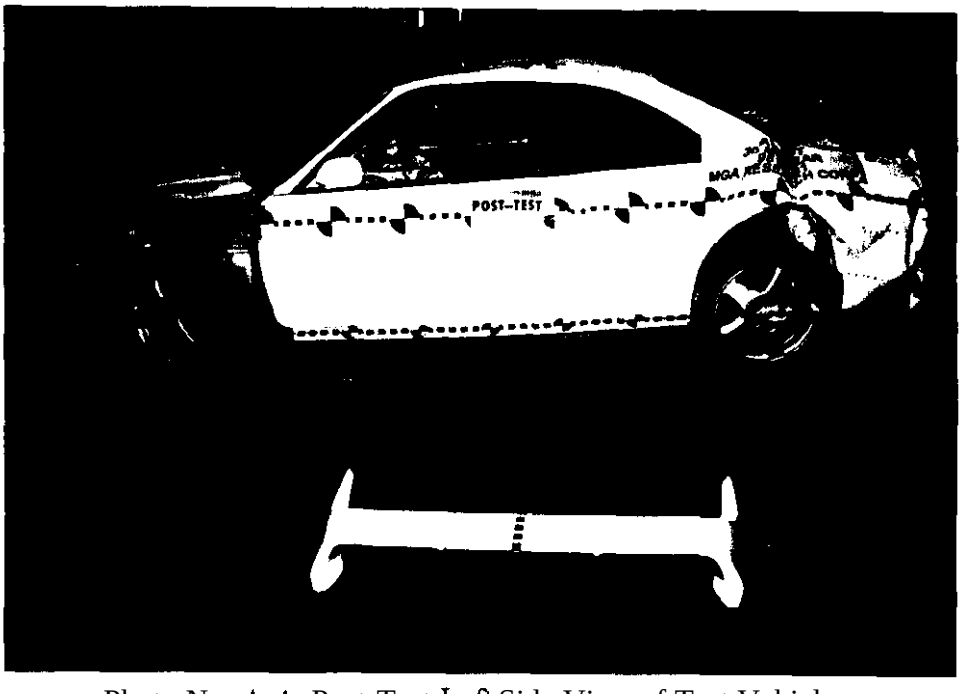

Photo No. A-4 - Post-Test Left Side View of Test Vehicle

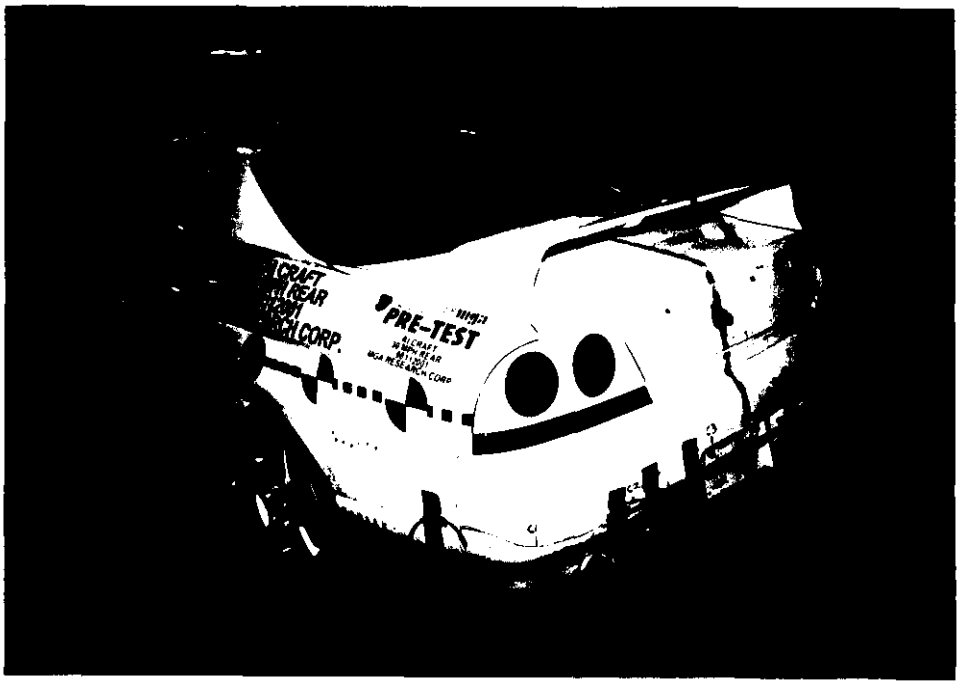

Photo No. A-5 - Pre-Test Left Rear 3/4 View of Test Vehicle

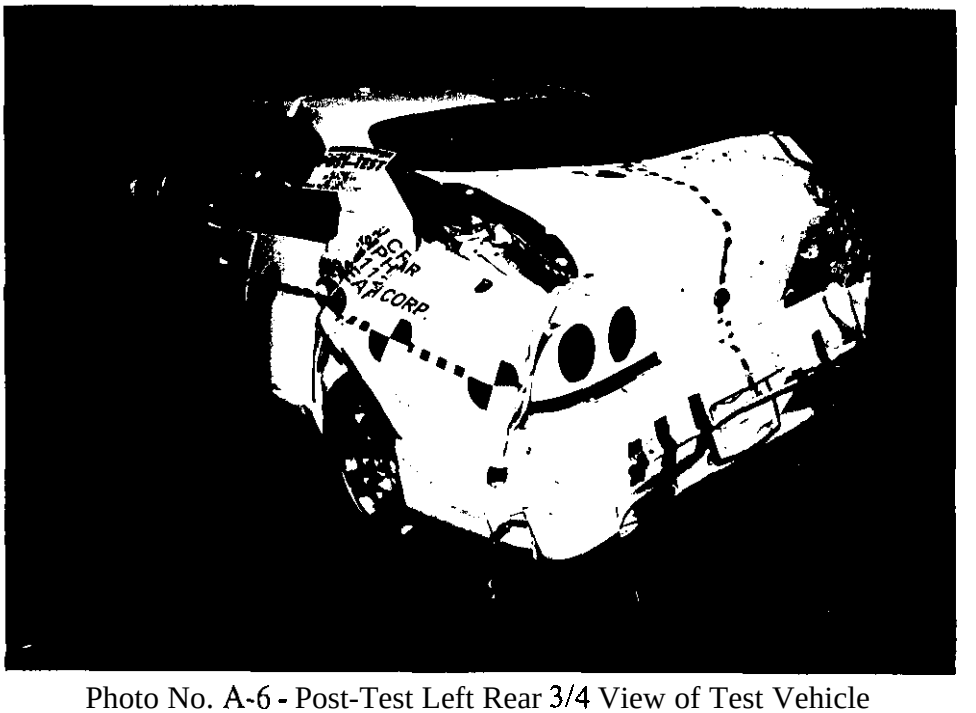

Photo No. A-6 - Post-Test Left Rear 3/4 View of Test Vehicle

Photo No. A-7 - Pre-Test Right Side View of Test Vehicle

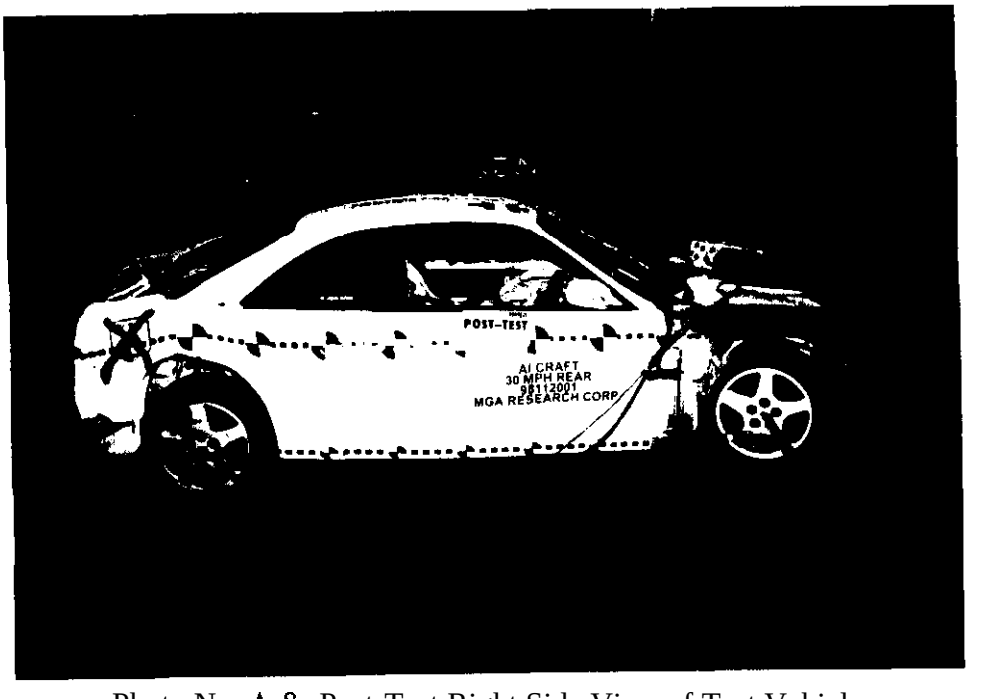

Photo No. A-8 - Post-Test Right Side View of Test Vehicle

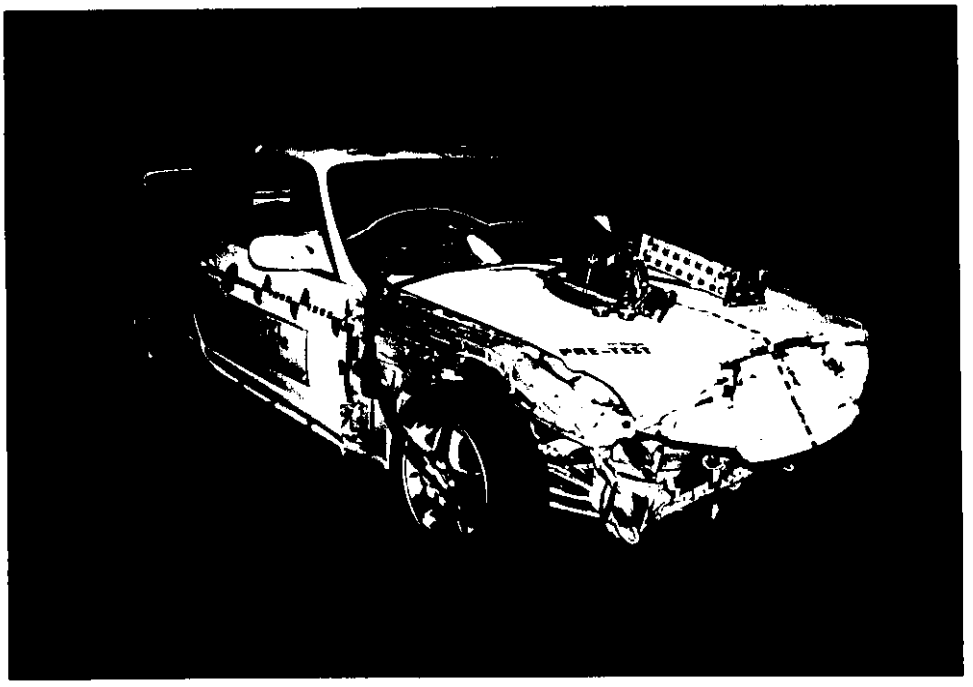

Photo No. A-9 - Pre-Test Right Front 3/4 View of Test Vehicle

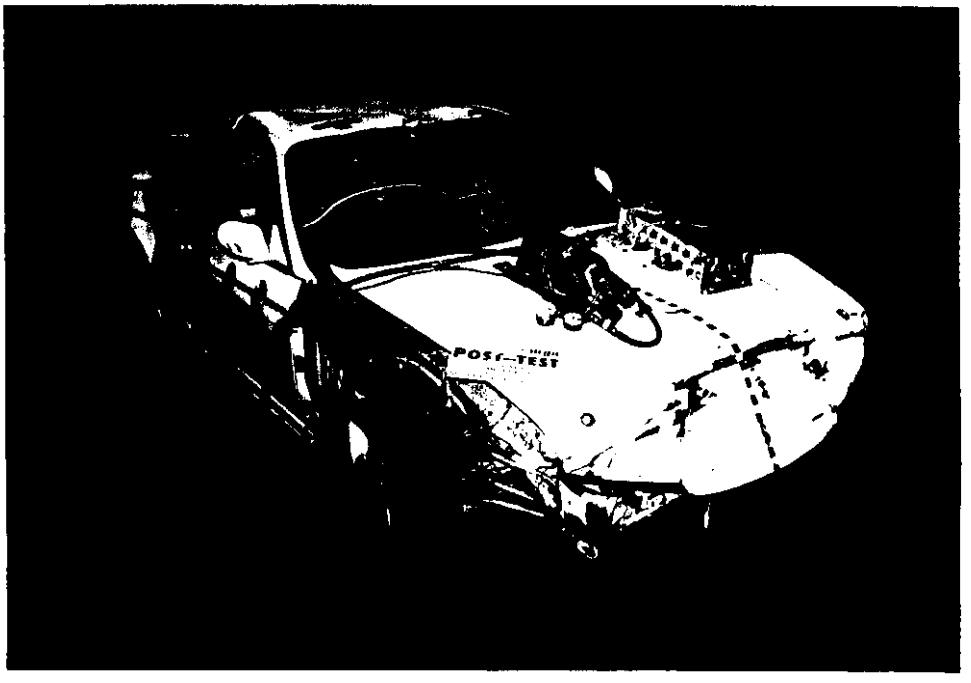

Photo No. A-10 - Post-Test Right Front 3/4 View of Test Vehicle

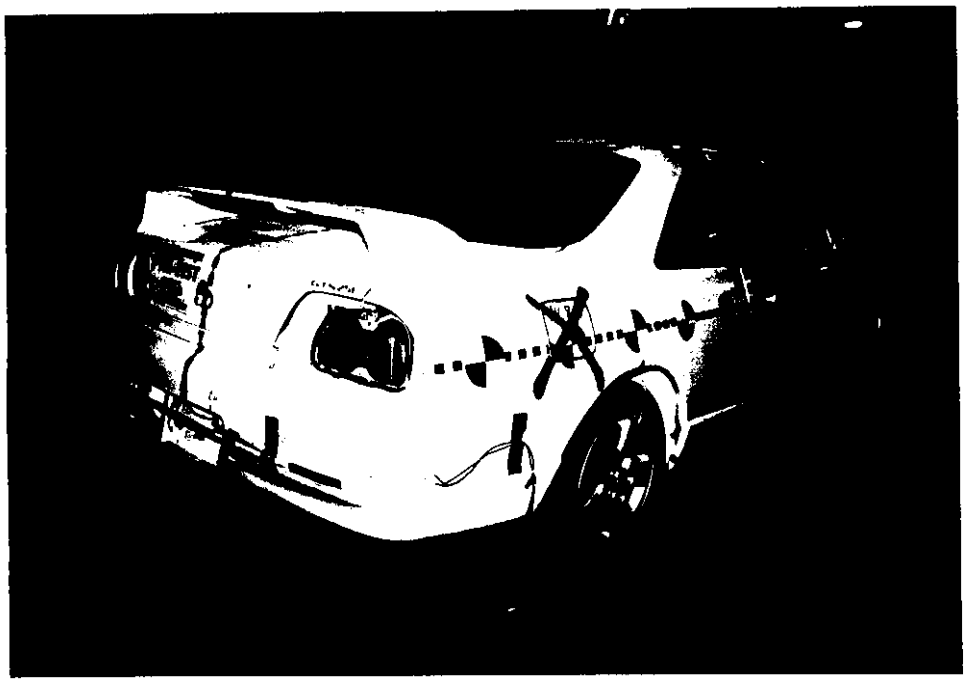

Photo No. A-l 1 - Pre-Test Right Rear 3/4 View of Test Vehicle

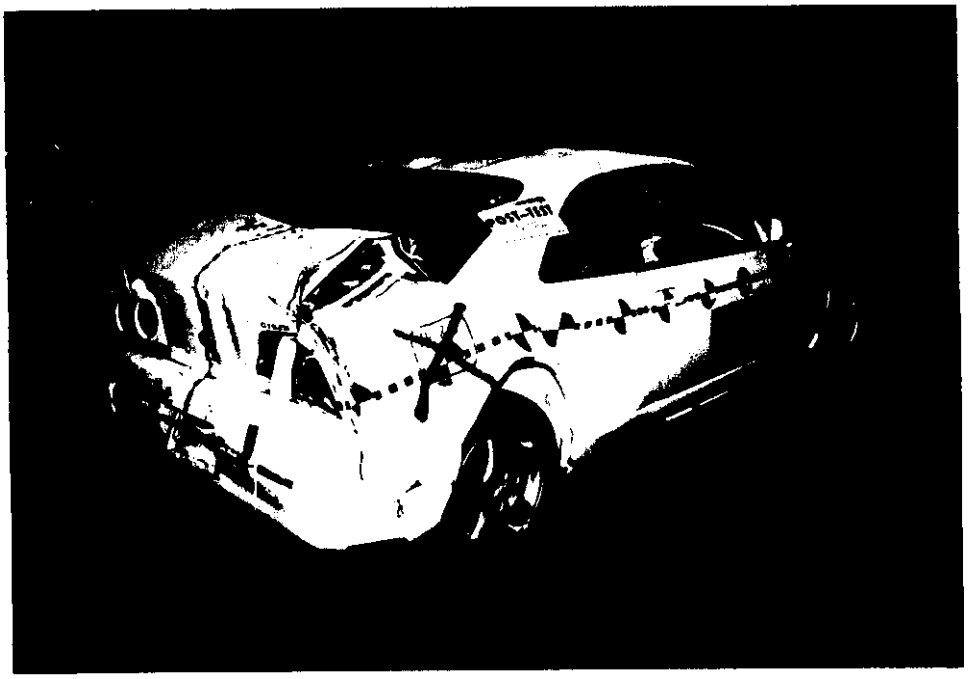

Photo No. A-12 - Post-Test Right Rear 3/4 View of Test Vehicle

Photo No. A-13 - Pre-Test Rear View of Test Vehicle

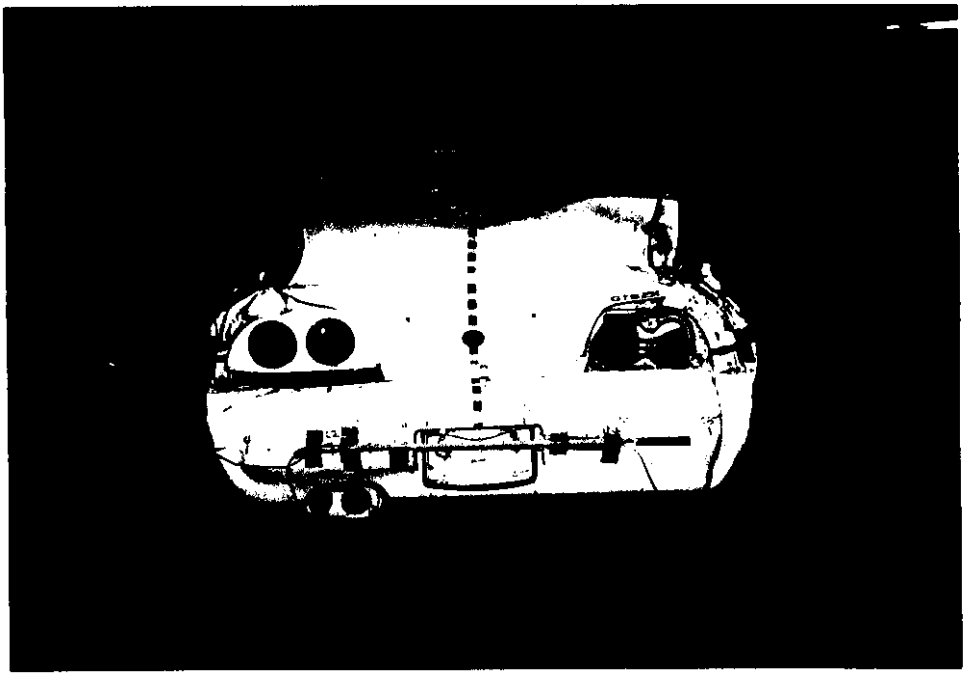

Photo No. A-14 - Post-Test Rear View of Test Vehicle

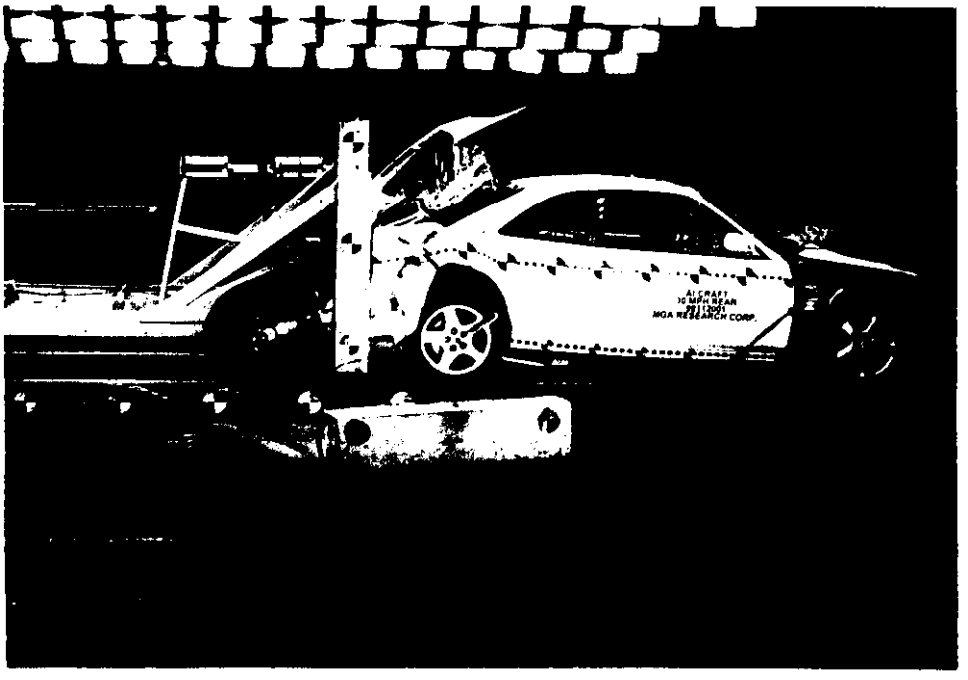

Photo No. A-15 -Vehicle Impact

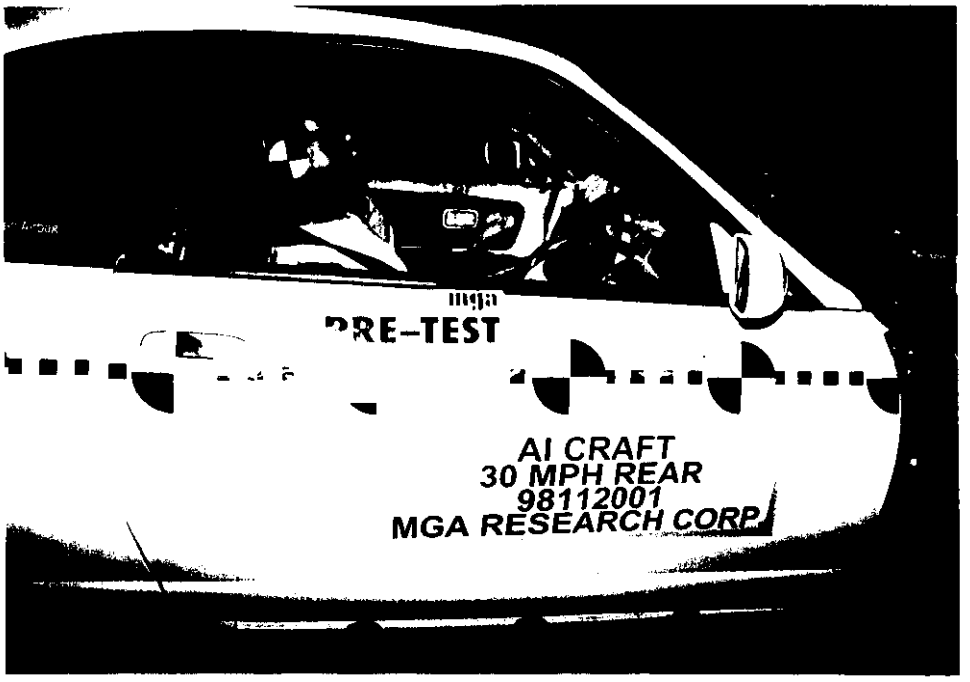

Photo No. A-16 - Pre-Test Driver Dummy Right Side View

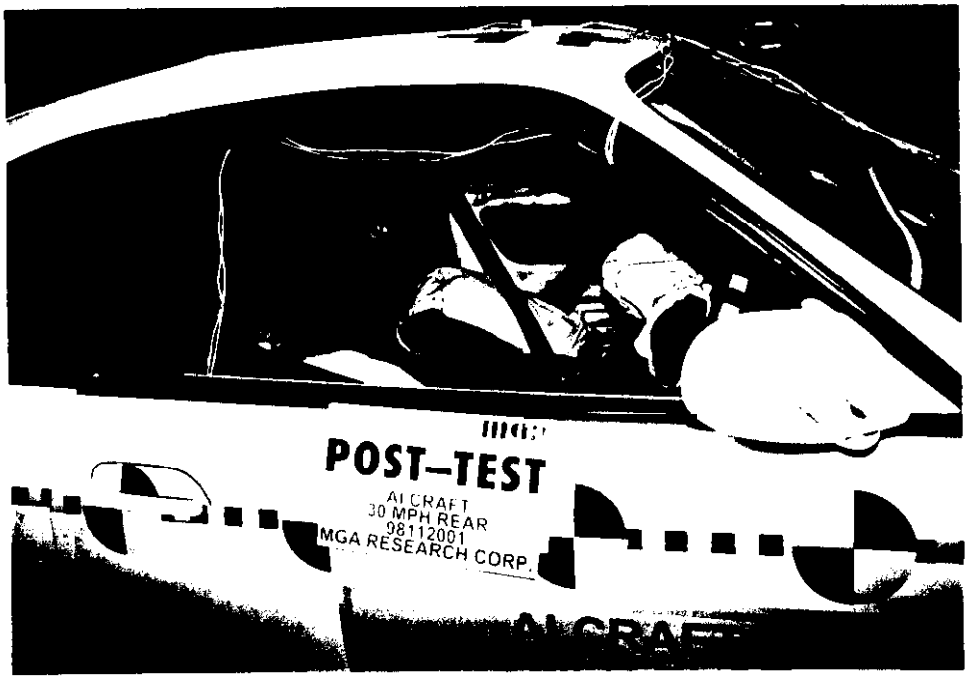

Photo No. A-17 - Post-Test Driver Dummy Right Side View

Photo No. A-18 - Pre-Test Driver Dummy Right Side View (Door Open)

Photo No. A-19 - Post-Test Driver Dummy Right Side View (Door Open)

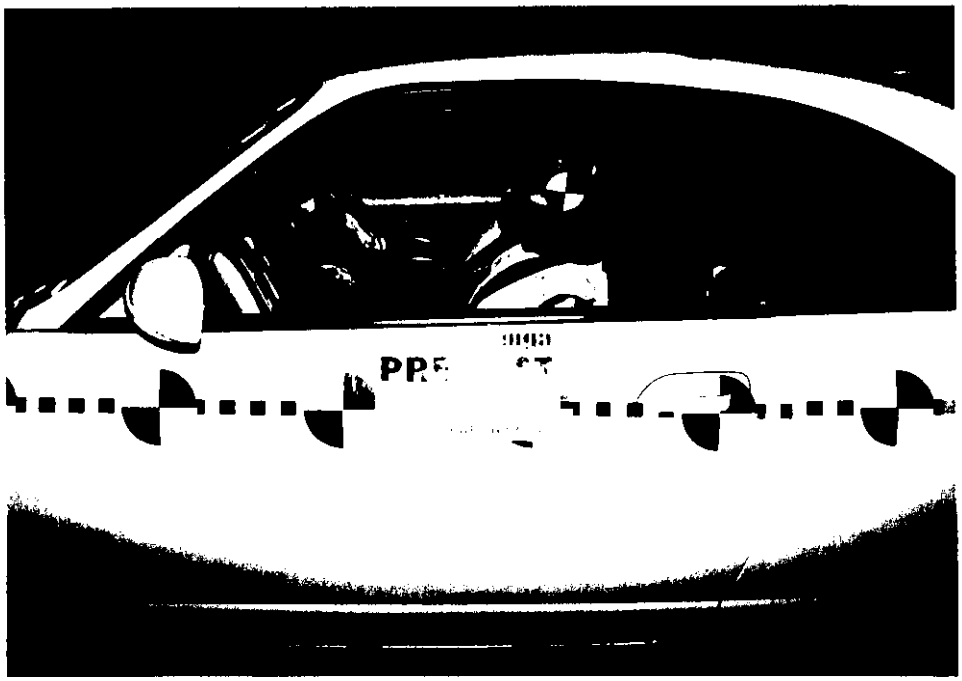

Photo No. A-20 - Pre-Test Passenger Dummy Left Side View

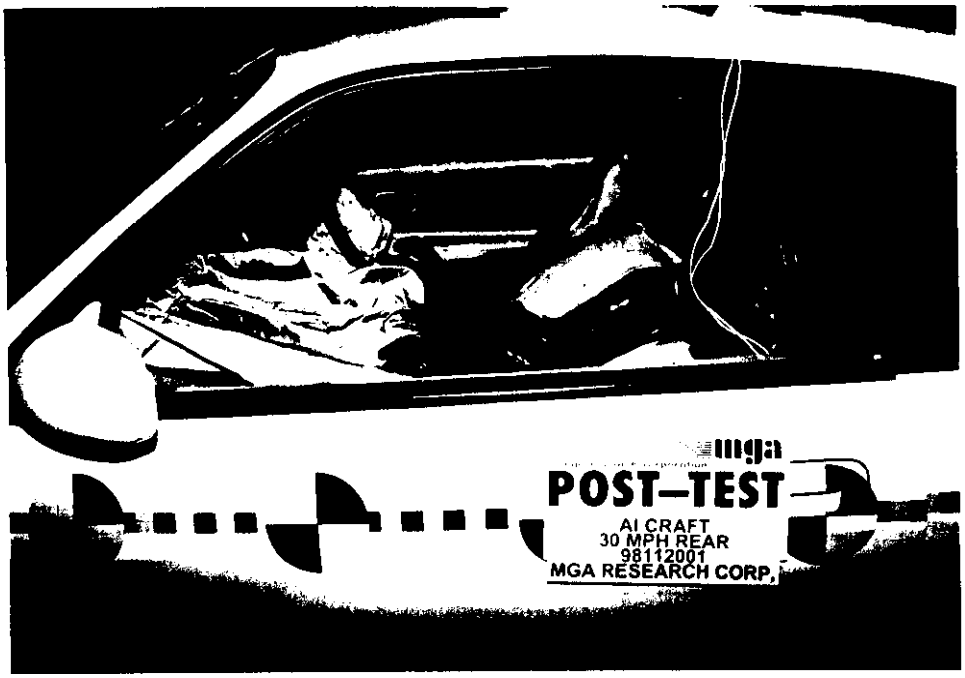

Photo No. A-21 - Post-Test Passenger Dummy Left Side View

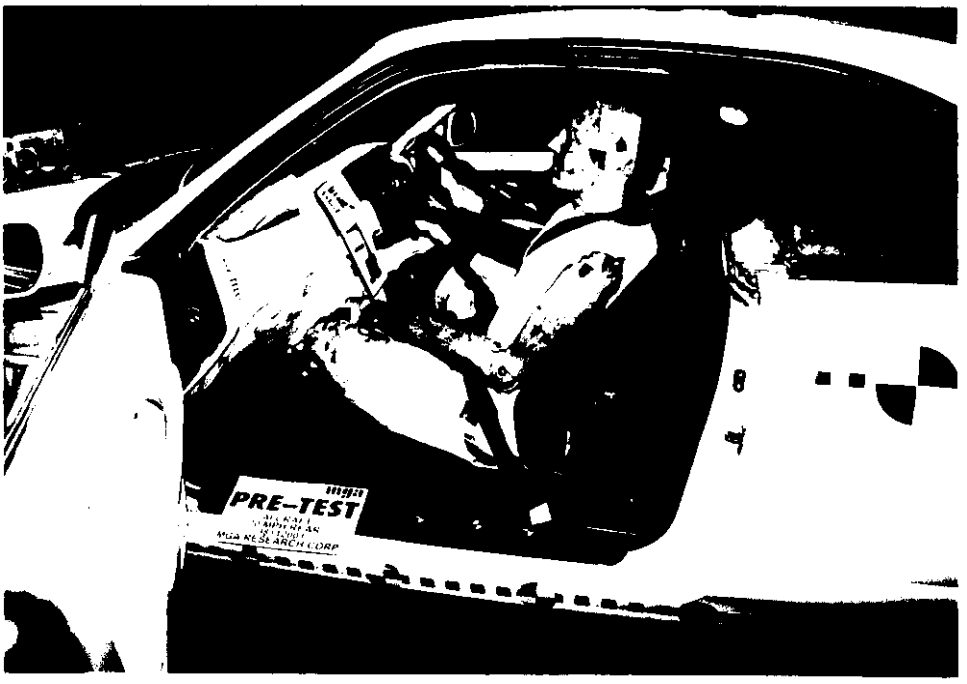

Photo No. A-22 - Pre-Test Passenger Dummy Left Side View (Door Open)

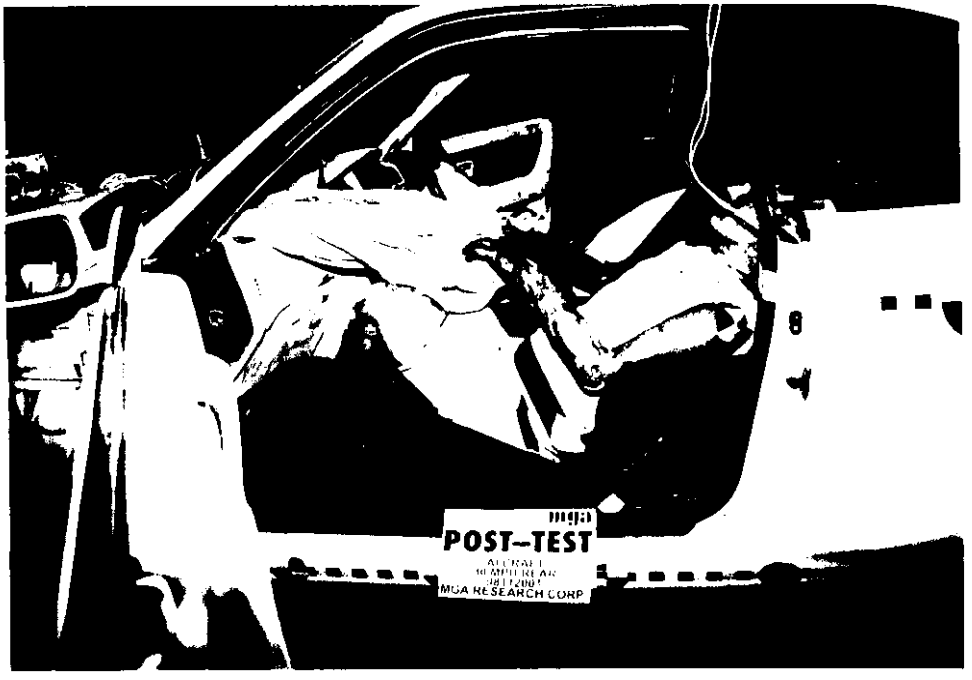

Photo No. A-23 - Post-Test Passenger Dummy Left Side View (Door Open)

Photo No. A-24 Pre-Test Windshield View

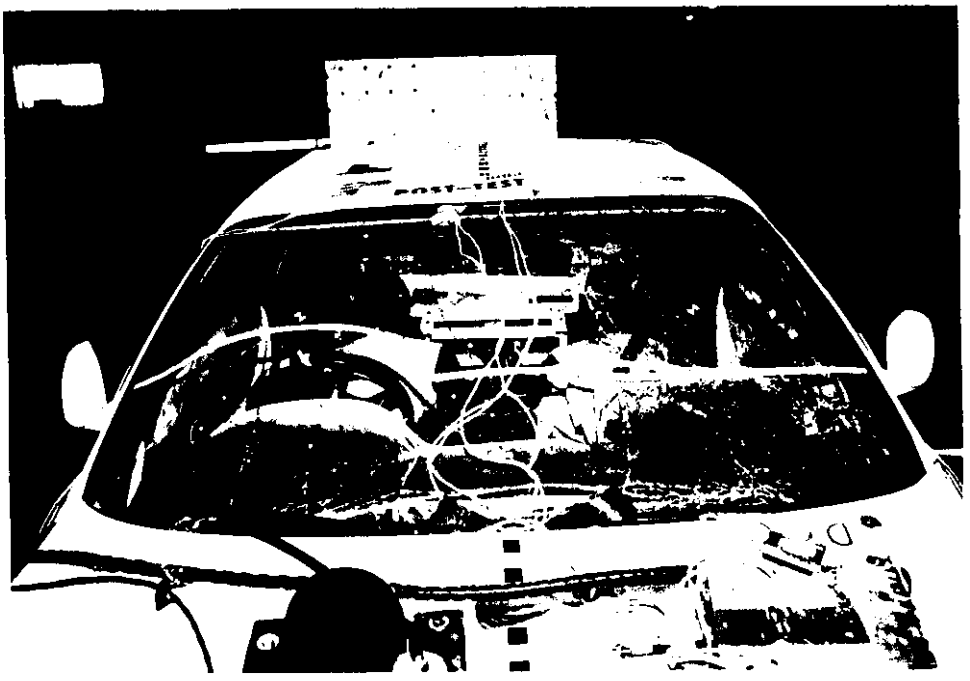

Photo No. A-25 - Post-Test Windshield View

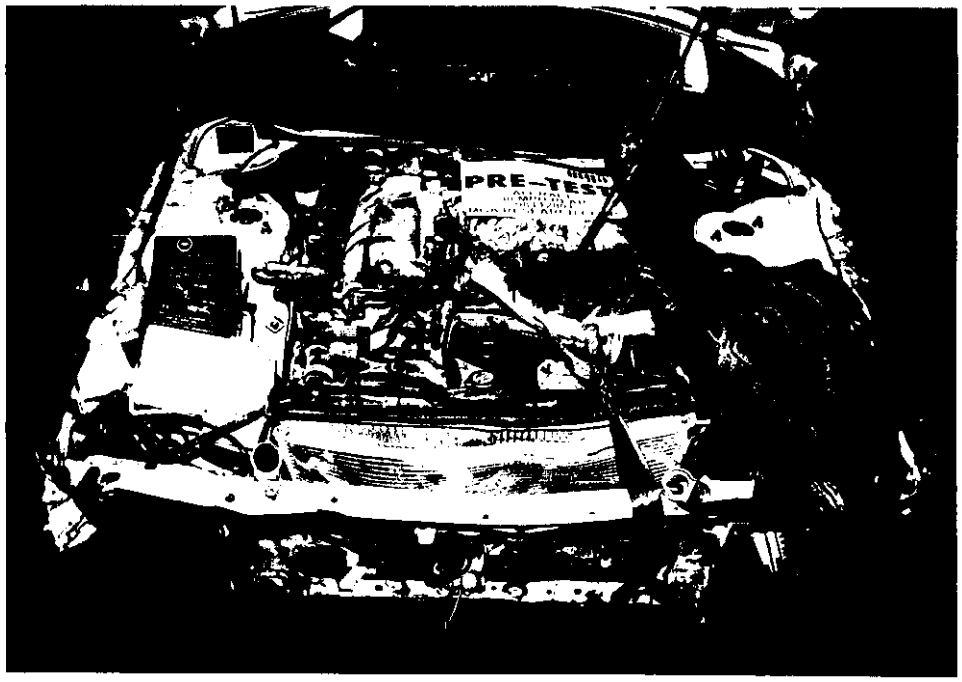

Photo No. A-26 - Pre-Test Engine Compartment View

Photo No. A-27 - Pre-Test Fuel Cap View

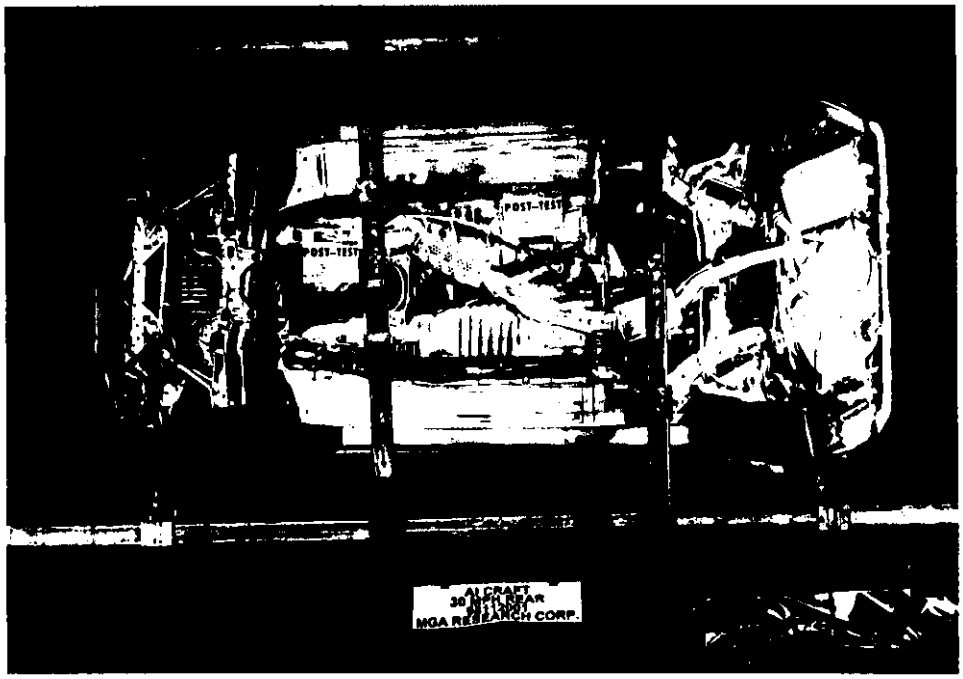

Photo No. A-28 - 0° - 90° Rollover

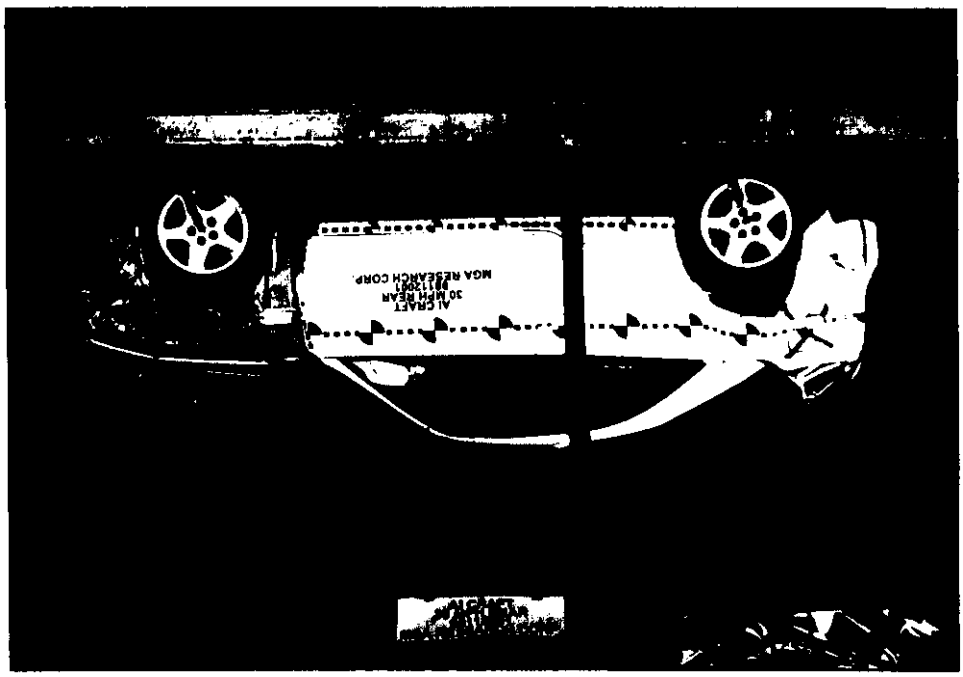

Photo No. A-29 - 90° - 180° Rollover

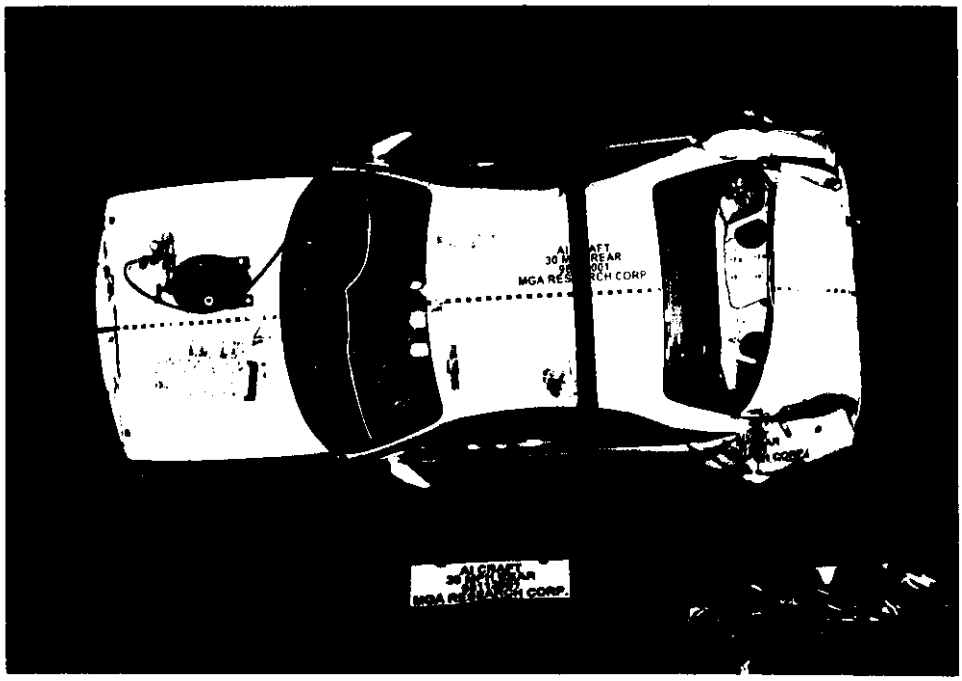

Photo No. A-30 - 180° - 270° Rollover

Photo No. A-3 1 - 270° 360° Rollover

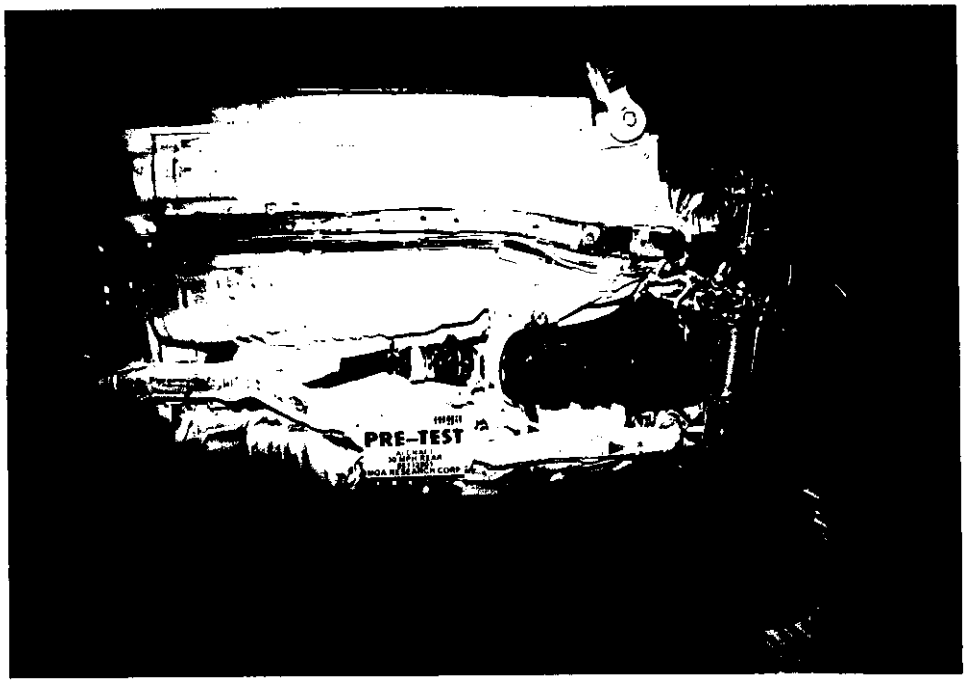

Photo No. A-32 - Pre-Test Front Underbody View

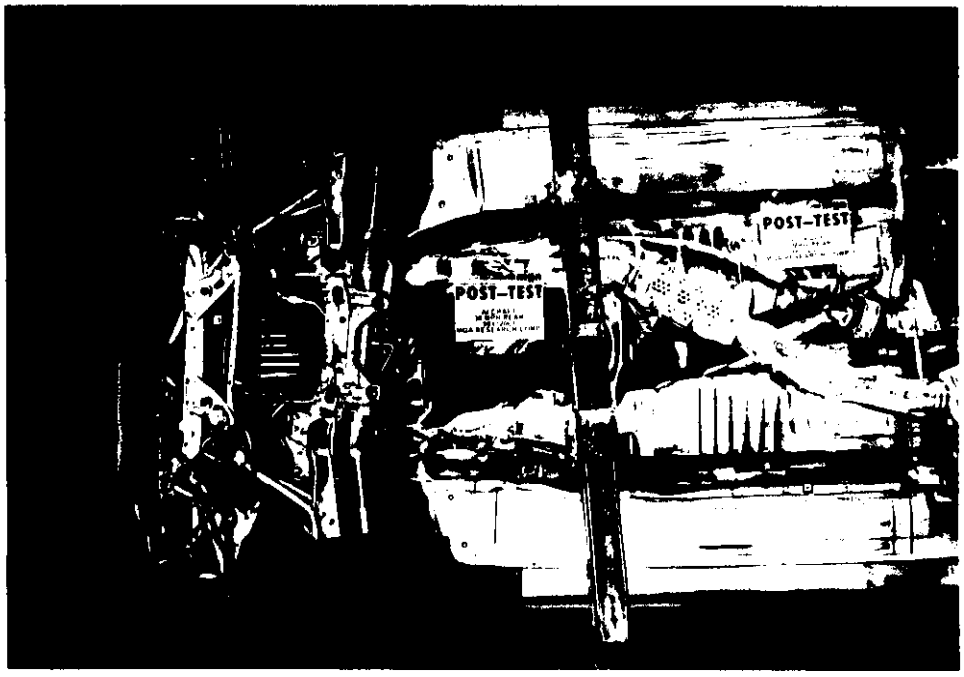

Photo No. A-33 Post-Test Front Underbody View

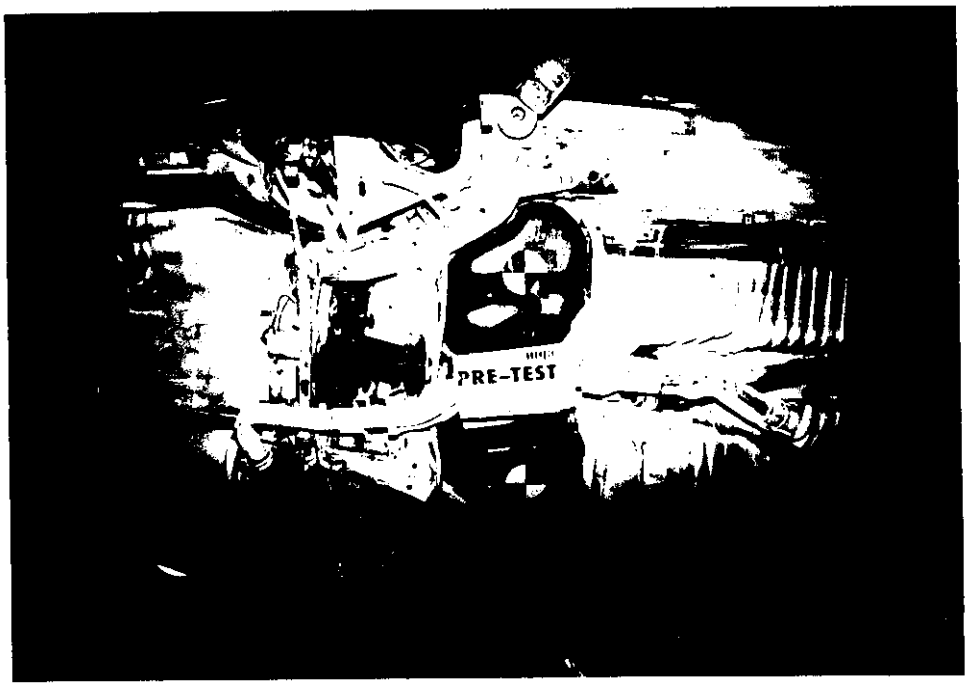

Photo No. A-34 - Pre-Test Rear Underbody View

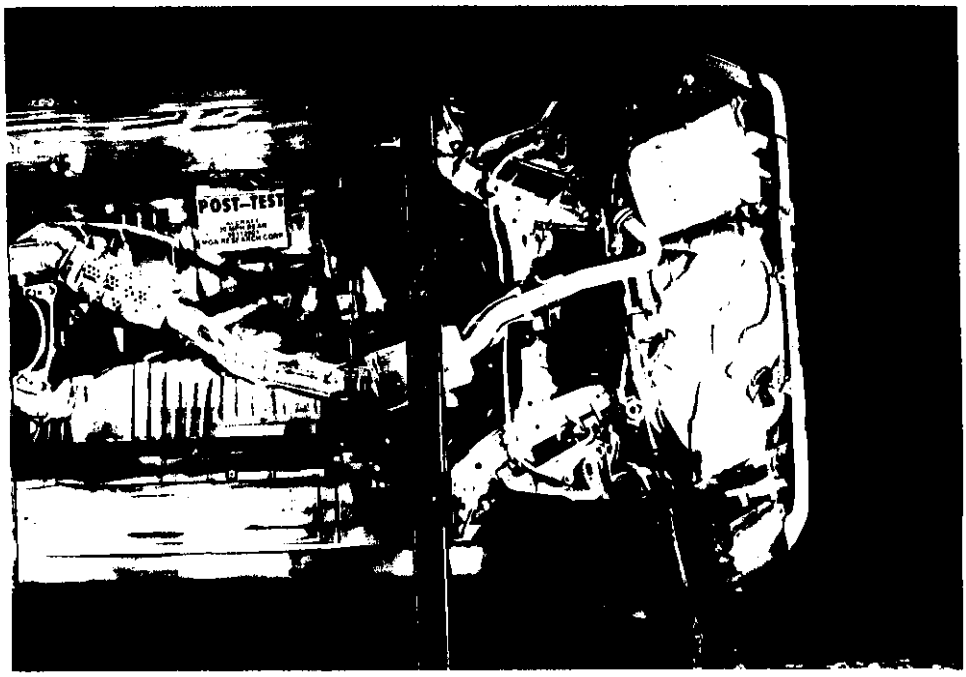

Photo No. A-35 - Post-Test Rear Underbody View