DEPARTMENT OF TRANSPORTATION

Federal Aviation Administration

14 CFR Parts 417,420

[Docket No. FAA–1999–5833; Notice No. 99–07]

RIN 2120–AG15

Licensing and Safety Requirements for Operation of a Launch Site

AGENCY: Federal Aviation Administration (FAA), DOT.

ACTION: Notice of proposed rulemaking (NPRM).

SUMMARY: The Department of Transportation's (DOT or the Department) Federal Aviation Administration (FAA) is proposing to amend its commercial space transportation licensing regulations to add licensing and safety requirements for the operation of a launch site. To date, commercial launches have occurred principally at federal launch ranges under safety procedures developed by federal launch range operators. To enable the development and use of launch sites that are not operated by a federal launch range, rules are needed to establish specific licensing and safety requirements for operating a launch site, whether that site located on or off of a federal launch range. These proposed rules would provide licensed launch site operators with licensing and safety requirements to protect the public from the risks associated with activities at a launch site.

A separate rulemaking will address licensing and safety requirements for operation of a reentry site.

DATES: Comments on the proposed regulations must be submitted on or before September 23. 1999.

ADDRESSES: Comments on this proposed rulemaking should be mailed or delivered, in duplicate. to: U.S. Department of Transportation Dockets, Docket No. FAA-1999-5833.400 Seventh Street, SW, Room Plaza 401, Washington, DC 20590. Comments may also be sent electronically to the following Internet address: 9–NPRM–CMTS@faa.gov. Comments may be filed and/or examined in Room Plaza 40 1 between 10 a.m. and 5 p.m. weekdays except Federal holidays.

FOR FURTHER INFORMATION CONTACT: J. Randall Repcheck, Licensing and Safety Division (AST-200). Commercial Space Transportation, Federal Aviation Administration, 800 Independence Avenue, Washington, DC 2059 1; telephone (202) 267-8602; or Laura Montgomery, Office of the Chief Counsel (AGC-250). FAA, 800 Independence Avenue, Washington, DC 2059 1; telephone (202) 267–3150.

SUPPLEMENTARY INFORMATION:

Comments Invited

Interested persons are invited to participate in this rulemaking by submitting such written data, views, or arguments as they may desire. Comments relating to the environmental, energy, federalism, or economic impact that might result from adopting the proposals in this notice are also invited. Substantive comments should be accompanied by cost estimates. Comments must identify the regulatory docket or notice number and be submitted in triplicate to the Rules Docket address specified above.

All comments received, as well as a report summarizing each substantive public contact with FAA personnel on this rulemaking, will be filed in the docket. The docket is available for public inspection before and after the comment closing date.

All comments received on or before the closing date will be considered by the FAA before taking action on this proposed rulemaking. Late-filed comments will be considered to the extent practicable, and consistent with statutory deadlines. The proposals contained in this Notice may be changed in light of the comments received.

Commenters wishing the FAA to acknowledge receipt of their comments submitted in response to this notice must include a pre-addressed, stamped postcard with those comments on which the following statement is made: "Comments to Docket No. FAA–1999–5833." The postcard will be date stamped and mailed to the commenter.

Availability of NPRMs

An electronic copy of this document may be downloaded using a modem and suitable communications software from the FAA regulations section of the Fedworld electronic bulletin board service (telephone: 703-32 l-3339). the Government Printing Office's electronic bulletin board service (telephone: 202-5 12-166 1), or the FAA's Aviation Rulemaking Advisory Committee Bulletin Board service (telephone: (800) 322-2722 or (202) 267-5948). Internet users may reach the FAA's web page at http://www.faa.gov/avr/arm/nprm/nprm.htm or the Government Printing Office's webpage at http://www.access.gpo.gov/nara for access to recently published rulemaking documents.

Any person may obtain a copy of this NPRM by submitting a request to the Federal Aviation Administration, Office of Rulemaking, ARM- 1, 800 Independence Avenue, SW., Washington, DC 2059 1, or by calling (202) 267–9680. Communications must identify the notice number or docket number of this NPRM.

Persons interested in being placed on the mailing list for future NPRM's should request from the above office a copy of Advisory Circular No. 11–2A, Notice of Proposed Rulemaking Distribution System, that describes the application procedure.

Outline of Notice of Proposed Rulemaking:

I. Background
  A. The FAA's Commercial Space Transportation Licensing Role
  B. Growth and Current Status of Launch Site Industry
  C. Current Practices
II. Discussion of Proposed Regulations
  A. License and Safety Requirements for Operation of a Launch Site
  B. Explosive Site Plan Review
  C. Explosive Mishap Prevention Measures
  D. Launch Site Location Review
  E. License Conditions
  F. Operational Responsibilities
III. Part Analysis
IV. Required Analyses

I. Background

The Commercial Space Launch Act of 1984, as codified at 49 U.S.C. Subtitle IX-Commercial Space Transportation, ch. 701, Commercial Space Launch Activities, 49 U.S.C. 70101-70121 (the Act), authorizes the Secretary of Transportation to license a launch or the operation of a lunch site carried out by a US. citizen or within the United States. 49 U.S.C. 70104, 70105. The Act directs the Secretary to exercise this responsibility in the interests of public health and safety, safety of property, and the national security and foreign policy interests of the United States 49 U.S.C. 70105. On August 4. 1994, a National Space Transportation Policy reaffirmed the government's commitment to the commercial space transportation industry and the critical role of the Department of Transportation (DOT) in encouraging and facilitating private sector launch activities. A National Space Policy released on September 19. 1996, notes and reaffirms that DOT is responsible as the lead agency for regulatory guidance pertaining to commercial space transportation activities.

A. The FAA's Commercial Space Transportation Licensing Role

On November 15, 1995, the Secretary of Transportation delegated commercial space licensing authority to the Federal

Aviation Administration. The FAA licenses commercial launches and the operation of launch sites pursuant to the Act and implementing regulations at 14 CFR Ch. III. The commercial launch licensing regulations were issued in April 1988. when no commercial launches had yet taken place. Accordingly, DOT established a flexible licensing process intended to be responsive to an emerging industry while ensuring public safety. The Department noted that it would "continue to evaluate and, when necessary, reshape its program in response to growth, innovation, and diversity in this critically important industry." "Commercial Space Transportation; Licensing Regulations," 53 FR 11,004, 11,006 (Apr. 4. 1988).

Under the 1988 regulations, DOT implemented a case-by-case approach to evaluating launch and launch site operator license applications. At the time, it was envisioned that most commercial launches would take place from federal launch ranges, which imposed extensive ground and flight safety requirements on launch operators, pending the development of commercial launch sites. The Federal launch ranges provided commercial launch operators with facilities and launch support, including flight safety services.

Since 1988, DOT and now the FAA have taken steps designed to simplify further the licensing process for launch operators. The regulatory and licensing emphasis during the past decade has been on launch operators. The emergence of a commercial launch site sector has only become a reality during the past few years.

B. Growth and Current Status of Launch Site Industry

The commercial space transportation industry continues to grow and diversify. Between the first licensed commercial launch in August 1989. and June 1999, 113 licensed launches have taken place from five different federal launch ranges, one from a launch site operated by a licensed launch site operator and one has taken place from Spain. The vehicles have included traditional orbital expendable launch vehicles, such as the Atlas, Titan, and Delta, sub-orbital launch vehicles such as the Starfire. new expendable launch vehicles using traditional launch techniques, such as Athena and Conestoga, and unique vehicles, such as the air-borne Pegasus. In a notice of proposed rulemaking issued on March 19. 1997, 62 FR 13216, the FAA discussed how the commercial launch industry has evolved from one relying on traditional orbital and suborbital launch vehicles to one with a diverse mix of vehicles using new technology and new concepts. A number of international ventures involving U.S. companies have also formed, further adding to this diversity.

Development in cost savings and innovation are not confined to the launch industry. The launch site industry, the focus of this NPRM, has also made progress. Commercial launch site operations are coming on line with the stated goal of providing flexible and cost-effective facilities both for existing launch vehicles and for new vehicles. When the commercial launch industry began, commercial launch companies based their launch operations chiefly at federal launch ranges operated by the Department of Defense (DOD) and the National Aeronautics and Space Administration (NASA). Federal launch ranges that have supported licensed launches include the Eastern Range, located at Cape Canaveral Air Station in Florida (CCAS), and the Western Range located at Vandenberg Air Force Base (VAFB), in California, both operated by the U.S. Air Force; Wallops Flight Facility in Virginia, operated by NASA; White Sands Missile Range (WSMR) in New Mexico, operated by the U.S. Army: and the Kauai Test Facility in Hawaii, operated by the U.S. Navy. Federal launch ranges provide the advantage of existing launch infrastructure and range safety services. Launch companies are able to obtain a number of services from a federal launch range, including radar, tracking and telemetry, flight termination and other launch services.

Today, most commercial launches still take place from federal launch ranges: however, this pattern may change as other launch sites become more prevalent. On September 19. 1996, the FAA granted the first license to operate a launch site to Spaceport Systems International to operate California Spaceport. That launch site is located within VAFB. Three other launch site operators have received licenses. Spaceport Florida Authority (SEA) received an FAA license to operate Launch Complex 46 at CCAS as a launch site. Virginia Commercial Space Flight Authority (VCSFA) received a license to operate Virginia Spaceflight Center (VSC) within NASA's Wallops Flight Facility. Most recently, Alaska Aerospace Development Corporation (AADC) received a license to operate Kodiak Launch Complex (KLC) as a launch site on Kodiak Island, Alaska. The New Mexico Office of Space Commercialization (NMOSC) proposes to operate Southwest Regional Spaceport (SRS) adjacent to the White Sands Missile Range as a site for reusable launch vehicles. It is evident from this list that federal launch ranges still play a role in the licensed operation of a number of launch sites. California Spaceport, Spaceport Florida and VSC are located on federal launch range property.

Whether launching from a federal launch range, a launch site located on a federal launch range, or a non-federal launch site, a launch operator is responsible for ground and flight safety under its FAA license. At a federal launch range a launch operator must comply with the rules and procedures of the federal launch range. The safety rules, procedures and practice, in concert with the safety functions of the federal launch ranges, have been assessed by the FAA, and found to satisfy the majority of the FAA's safety concerns. In contrast, when launching from a non-federal launch site, a launch operator's responsibility for ground and flight safety takes on added importance. In the absence of federal launch range oversight, it will be incumbent upon each launch operator to demonstrate the adequacy of its ground and flight safety to the FAA.

C. Current Practices

Because of the time and investment involved in bringing a commercial launch facility into being, several entities that have been planning to establish these facilities asked the DOT for guidance concerning the information that might be requested as part of an application for a license to operate a launch site. In response to these requests. DOT's then Office of Commercial Space Transportation (Office) published "Site Operators License, Guidelines for Applicants," on August 8, 1995. as guidance for potential launch site operators. The guidelines describe the information that DOT, and now the FAA, expects from an applicant for a license to operate a commercial launch site. This information includes launch site location information, a hazard analysis, and a launch site safety operations document that governs how the facility should be operated to ensure public safety and the safety of property. The Office intended that the guidelines would assist an applicant with the parts of the application that are critical to assuring the suitability of the launch site location, the applicant's organization, and the facility for providing safe operations.

The Office issued the guidelines as an interim measure for potential developers of launch sites pending this

rulemaking. and the guidelines describe the information that the FAA requests of an applicant as part of its application for a license to operate a launch site. The pace of development of the launch site industry has resulted in the FAA describing the process and requirements for applications for launch site operator licenses under the guidelines. As noted above, the FAA issued its first license to operate a launch site to Spaceport Systems International for the operation of California Spaceport. The FAA issued this license under its general authority under 49 U.S.C. 70104 and 70105 and 14 CFR Ch. III to license the operation of a launch site. Because the operation of California Spaceport as a launch site occurs at a federal launch range, the U.S. Air Force is expected to play a significant role in California Spaceports's safety process. In fact, the FAA was able to review the Spaceport Systems International application expeditiously because the applicant certified its intention to observe the safety requirements currently applied by the Western Range and contained in "Eastern and Western Range 127-1. Range Safety Requirements (EWR 127-1)," (Mar. 1995).[1] The FAA determined that applicant compliance with EWR 127-l. together with Air Force approval of other important elements of the operation of a launch site protected public health and safety and the safety of property. In general, the FAA deems the compliance by a licensed launch site operator with these requirements in combination with other safety practices imposed by a federal launch range as acceptable for purposes of protecting the public and property from hazards associated with launch site activities at a licensed launch site operator's facilities. In 1997, the FAA entered into a Memorandum of Agreement with Department of Defense and National Aeronautics and Space Administration regarding safety oversight of licensed launch site operators located on federal launch ranges.

Until these proposed rules become final, the guidelines provide the only published criteria for guiding a prospective license applicant and in identifying the criteria that the FAA uses in determining whether a proposed commercial launch site is acceptable.

Comparison of the Guidelines and the Proposed Regulations

The existing guidelines will no longer be in effect once the proposed regulations are issued as final rules. A comparison of some of the similarities and differences may therefore prove of assistance. The FAA will issue a license to operate a launch site under either the guidelines or the proposed rules only if the operation of the launch site will not jeopardize the public health and safety. the safety of property, or national security or foreign policy interests of the United States. The guidelines are flexible and are intended to identify the major elements of an application and lead the applicant through the application process with the FAA. The proposed rules would codify the requirements that must be met before a license will be issued.

The guidelines and the proposed rules share some common elements, namely, the need for the applicant to supply information to support the FAA's environmental determination under the National Environmental Policy Act (NEPA) and the FAA's policy review that addresses national security and foreign policy issues. These requirements are discussed in detail below, in the description of the proposed regulations. Under the proposed regulations, the information requirements for these reviews remain for the most part unchanged from the guidelines.

A review of the suitability of the proposed location of the launch site is an important component of both the guidelines and the proposed regulations. Although both approaches call for a site location review, the reviews differ in breadth and specificity. The guidelines request an applicant to provide information regarding geographic characteristics, flight paths and impact areas and the meteorological environment. To describe a launch site's geographic characteristics, an applicant is requested to provide information regarding the launch site location, size, and shape, its topographic and geological characteristics, its proximity to populated areas, and any local commercial and recreational activities that may be affected by launches such as air traffic, shipping, hunting, and offshore fishing. An applicant also provides planned possible flight paths and general impact areas designated for launch. If planned flight corridors overfly land, the guidelines request that an applicant provide flight safety analyses for generic sets of launch vehicles and describe, where applicable, any arrangements made to clear the land of people prior to launch vehicle flight. With respect to the meteorological environment, the guidelines request an applicant to provide data regarding temperature, surface and upper wind direction and velocity, temperature inversions, and extreme conditions that may affect the safety of launch site operations. Under the guidelines, an application should include the frequency (average number of days for each month) of extremes in wind or temperature inversion that could have an impact on launch.

In contrast, the proposed rules would require an applicant to use specified methods to demonstrate the suitability of the launch site location for launching at least one type of launch vehicle, including orbital, guided sub-orbital, or unguided sub-orbital expendable launch vehicles, and reusable launch vehicles. Each proposed launch point on the launch site must be evaluated for each type of launch vehicle that the applicant wishes to have launched from the launch point. An applicant would be provided with a choice of methods to develop a flight corridor for a representative launch of an orbital or guided sub-orbital expendable launch vehicle, or to develop a set of impact dispersion areas for a representative launch of an unguided sub-orbital expendable launch vehicle. If a flight corridor or set of impact dispersion areas exists that does not encompass populated areas, no additional analysis would be required. Otherwise, an applicant would be required to conduct a risk analysis to demonstrate that the risk to the public from a representative launch would not exceed a casualty expectation (E,) of $30 \times 10_{-6}$. The FAA would review the applicant's analyses to ensure the applicant's process was correct, and would approve the launch site location if the E_c risk criteria were met.

Under either the guidelines or the proposed regulations, little or no launch site location review would be needed if the applicant proposed to locate a launch site at a federal launch range. The fundamental purpose of the FAA's proposed launch site location review—to assure that a launch may potentially take place safely from the proposed launch site-has been amply demonstrated at each of the ranges. Exceptions may occur if a prospective launch site operator plans to use a launch site at a federal launch range for launches markedly different from past federal launch range launches, or if an applicant proposes a new launch point from which no launch has taken place.

The guidelines and proposed regulations differ markedly in their approach to ground and flight safety. For ground safety under the guidelines, applicants perform a hazard analysis and develop a comprehensive ground safety plan and a safety organization. Explosive safety is part of the analysis

[1] EWR 127-I is updated on an ongoing basis. The latest version of these requirements may be found at http://www.pafb.af mil/45SW/.

and safety plan. In contrast, the proposed regulations require the submission of an explosive site plan, but impose fewer operational ground safety responsibilities on a launch site operator. For flight safety, under the guidelines and proposed rules, a launch site operator license contains minimal flight safety responsibilities. The FAA assigns almost all responsibility for flight safety and significant ground safety responsibility to a licensed launch operator. Extensive ground and flight safety requirements will accompany a launch license. This does not mean a launch site operator cannot offer flight safety services or equipment to its customers. However, the adequacy of such service and equipment typically will be assessed in the FAA's review of a launch license application.

II. Discussion of Proposed Regulations

The proposed regulations specify who must obtain a license to operate a launch site, application requirements and licensee responsibilities. Because a launch licensee's license covers ground operations as well as the flight of a launch vehicle, a launch operator is not required to obtain a license to operate a launch site. The FAA is aware that a launch operator may select a launch site for its own launches. In that event, a launch operator requires a license to launch. Only if a prospective launch site operator proposes to offer its launch site to others, need that person obtain a license to operate a launch site.

By means of operational, location, and site layout constraints, the FAA intends its regulations to ensure that the public is not harmed by launches that take place from a launch site whose operation the FAA has licensed. Additionally, in the course of a license review, the FAA will ensure that environmental and international obligations are addressed, and that national security interests are reviewed by the appropriate agencies. To further these objectives, the FAA proposes to create in 14 CFR Chapter III a new part 420 to contain the requirements for obtaining and possessing a license to operate a launch site. The FAA's proposed part 420 would require an applicant to obtain certain FAA approvals in order to receive a license to operate a launch site. These required approvals consist of policy, explosive site plan, and location approvals. Environmental review may precede or be concurrent with the licensing process.

The grant of a license to operate a launch site will not guarantee that a launch license will be granted for any particular launch proposed for the site. All launches will be subject to separate FAA review and licensing.

A. Licensing and Safety Requirements for Operation of a Launch Site

The FAA's proposed approach to licensing the operation of a launch site would focus on four areas of concern critical to ensuring that operation of a launch site would not jeopardize public health and safety, the safety of property or foreign policy and other U.S. interests. These reviews would encompass the environment, policy, siting of explosives, and site location. Under the proposed regulations, an applicant would be required to provide the FAA with information sufficient to conduct environmental and policy reviews and determinations. An applicant would also be required to submit an explosive site plan that shows the location of all explosive hazard facilities and distances between them, and the distances to public areas.

In the case of launch site location approval, the proposed regulations would provide an applicant options for proving to the FAA that a launch could be conducted from the site without jeopardizing public health and safety. The requirement for a launch site location approval would not normally apply to an applicant who proposes to operate an existing launch point at a federal launch range, unless the applicant plans to use a launch point different than used previously by the federal launch range, or to use an existing launch point for a different type or larger launch vehicle than used in the past. The fact that launches have taken place safely from any particular launch point at a federal launch range may provide the same demonstration that would be accomplished by the FAA's proposed location review: Namely, a showing that launch may occur safely from the site.

The FAA is proposing to impose specific ground safety responsibilities on a licensed launch site operator, and will require that an applicant demonstrate how those requirements will be met. A launch site operator licensee's responsibilities would include: Preventing unauthorized public access to the site; properly preparing the public and customers to visit the site; informing customers of limitations on use of the site; scheduling and coordinating hazardous activities conducted by customers; and arranging for the clearing of air and sea routes and notifying adjacent property owners and local jurisdictions of the pending flight of a launch vehicle. Part 420 would also contain launch site operator responsibilities with regard to recordkeeping. license transfer, compliance monitoring, accident investigation and explosives. Other federal government agencies have jurisdiction over a number of ground safety issues, and the FAA does not intend to duplicate their efforts.[23] The FAA will revisit ground safety issues in its development of rules for launches from non-federal launch sites.

Environmental

Licensing the operation of a launch site is a major federal action for purposes of the National Environmental Policy Act, 42 U.S.C. 4321 et seq. As a result, the FAA is required to assess the environmental impacts of constructing and operating a proposed launch site to determine whether these activities will significantly affect the quality of the environment. Although the FAA is responsible under NEPA regulations for preparing an environmental assessment or environmental impact statement, the proposed rules continue to require a license applicant to provide the FAA with sufficient information to conduct an analysis in accordance with the requirements of the Council on Environmental Quality (CEQ) Regulations Implementing the Procedural Provisions of NEPA, 40 CFR parts 1500-I 508, and the FAA's Procedures for Considering Environmental Impacts. FAA Order

[2] The U.S. Occupational Safety and Health Administration (OSHA) and the U.S. Environmental Protection Agency (EPA) play a role in regulating ground activities at a launch site. OSHA regulations cover worker safety issues. and may, as a by-product. help protect public safety as well. One provision of particular note is 29 CFR 1910.119. process safety management of highly hazardous chemicals (PSM). The requirements of the PSM standard are intended to eliminate or mitigate the consequences of releases of highly hazardous chemicals that may be toxic, reactive. flammable, or explosive. Management controls are emphasized to address the risks associated with handling or working near hazardous chemicals. These requirements may apply to some launch site and launch operators. EPA regulations are designed to protect the public health and safety from releases of chemicals. One regulation of note is 40 CFR part 68. Accidental release prevention provisions. It applies to an owner or operator of a stationary source that has more than a threshold quantity of a regulated substance in a process. and requires the owner or operator to develop and implement a risk management program to prevent accidents and limit the severity of any accidents that occur. The EPA rule further requires sources to conduct an offsite consequence analysis to define the potential impacts of worst-case releases and other release scenarios. For any process whose worst-case release would reach the public, the source must develop and implement a prevention program and an emergency response program. Both the EPA and OSHA prevention rules require regulated entities to conduct formal analyses of the risks involved in the use and storage of covered substances and consider all possible ways in which existing systems could fail and result in accidental release.

[3] ATF regulations cover the long-term storage of explosives.

1050.1D. An applicant will typically engage a contractor with specialized experience in the NEPA process to conduct the study underpinning the FAA's environmental analysis. This rulemaking marks no change in the environmental requirements attendant to obtaining a license to operate a launch site.

The FAA encourages an applicant to begin the environmental review. including the gathering of pertinent information to perform the assessment, early in the planning process, but after the applicant has defined its proposed action and considered feasible alternatives. The FAA will determine whether a finding of no significant impact (FONSI) may be issued after an environmental assessment, or whether an environmental impact statement followed by a record of decision is necessary. An applicant may be subject to restrictions on activities at a proposed launch site. An applicant may acquire property for future use as a launch site; however, absent a FONSI. the FAA must prepare an environmental review that includes consideration of reasonable alternatives to the site. According to the CEQ regulations as interpreted by the courts, an applicant may not use the purchase of a site or construction at the site to limit the array of reasonable alternatives. As a result, an applicant must complete the environmental process before construction or improvement of the site. The FAA will not issue a license if an environmental review in accordance with all applicable regulations and guidelines is not concluded.

Policy

Under current practice, the FAA conducts a policy review of an application for a license to operate a launch site to determine whether operation of the proposed launch site would jeopardize national security, foreign policy interests, or international obligations of the United States. The FAA conducts the policy review in coordination with other federal agencies that have responsibility for national and international interests. The Department of Defense is consulted to determine whether a license application presents any issues affecting national security. The Department of State reviews an application for issues affecting foreign policy or international obligations. Other agencies, such as NASA. are consulted as appropriate. By this rulemaking. the regulations would require an applicant to supply information relevant to the FAA's policy approval, including, for example. identification of foreign ownership of the applicant. The FAA will obtain other information required for a policy review from information submitted by an applicant in other parts of the application. During a policy review, the FAA would consult with an applicant regarding any question or issues before making a final determination. An applicant would have the opportunity to address any questions before completion of the review.

B. Explosive Site Plan Review

Proposed subpart B would establish criteria and procedures for the siting of facilities at a launch site where solid and liquid propellants are to be located to prepare launch vehicles and payloads for flight. Subpart B also would establish application procedures for an applicant to demonstrate compliance with the siting criteria. The requirements in subpart B are commonly referred to as quantity-distance (Q-D) requirements because they provide minimum separation distances between explosive hazard facilities, surrounding facilities and locations where the public may be present on the basis of the type and quantity of explosive material to be located within the area. Minimum prescribed separation distances are necessary to protect the public from explosive hazards on a launch site so that the effects of an explosion does not reach the public.

An applicant would provide the FAA an explosive site plan that demonstrates compliance with the proposed Q-D requirements. the FAA must approve this plan, so applicants are cautioned not to begin construction of facilities requiring an explosives site plan until obtaining FAA approval. Note also that the proposed Q-D requirements do not address any toxic hazards. Toxic hazards may be mitigated through procedural means, and the FAA will address toxic hazards in a separate rulemaking. If a toxic hazard is a controlling factor in siting, it should be considered along with the explosives hazards when the site plan is prepared.

The FAA proposes to adopt the explosive safety practice in use at federal launch ranges today, namely, the application of quantity-distance criteria. Prescribed distances provide for a separation of an explosive source from people and property that may otherwise be exposed to explosive events. These criteria have long been used to mitigate explosive hazards to an acceptable level. Q-D criteria address only the consequences. The underlying assumption of quantity-distance criteria is that an accidental explosion will occur for any explosive material operation.

The quantity-distance criteria in the proposed regulations are a critical mitigation measure required in a launch site operator application to provide the public protection from ground operations at a launch site. The proposed rules have other mitigation measures, including launch site operator responsibilities that address accident prevention measures, and procedural requirements to protect visitors and other launch site customers on the launch site. Any other procedural requirements necessary to protect the public from explosive hazards will be the responsibility of a launch operator under a launch license. The scope of a launch license encompasses ground activities, including the explosive operations involved with the handling and assembly of launch vehicles at a launch site.

The requirement to submit an explosive site plan to the FAA would not apply to an applicant applying for a license to operate a launch site at a federal launch range. Federal launch ranges have separate rules which are either identical or similar to the rules proposed, or permit mitigation measures which otherwise ensure safety.

What follows is a discussion of launch site explosive hazards, the reason the FAA is proposing explosive siting criteria, current Q-D standards, the FAA's proposed use of NASA and DOD Q-D standards, other approaches to explosive safety, application of ATF, DOD or NASA standards, future changes in liquid propellant requirements, and solid and liquid bi-propellants at launch pads.

Explosive Hazards on a Launch Site

The hazards associated with launch vehicle pre-flight operations involving large quantities of propellants may typically be broken down into phases, including storage, handling, assembly, checkout, ordnance installation, propellant loading, and final launch preparations. Each of these are covered below, for liquid and solid propellants.

During storage, liquid propellant hazards include leaking or ruptured propellant tanks causes by loss of pressure or mechanical failure. If fuels and oxidizers are stored separately any potentially harmful event would be limited to fire or tank pressure rupture. Solid propellant hazards include accidental ordnance initiation caused by stray electrical energy or dropping a motor with sufficient impact force to initiate the propellant. Long term storage of solid rocket motors, although not within the scope of this

rulemaking. presents its own unique hazards. As solid rocket motors age, chemical changes in the binder within the motor cause ammonium perchlorate to form on the outside of the motor. This is a hazardous condition. The shelf life of solid rocket motors can be extended by a carefully controlled environment in the storage facility.

The handling phase may include the transfer of liquid propellants from one holding tank to another. Explosive reactions may occur if fuels and oxidizers mix due to under or overpressurization. or if improper connections cause propellant tanks, transfer lines. or fittings to leak or rupture. If fuels and oxidizers are handled separately no explosive reactions should occur. Hazardous handling operations of solid rocket motors includes transporting and lifting with cranes at the launch pad or other facility. Any impact during these activities could cause propellant ignition.

During assembly, liquid propellant operations include the assembly and encapsulation of spacecraft and upper stages. Assembly and encapsulation may involve loading hypergolic propellants such as nitrogen tetroxide (N_2O_4) and hydrazine. Tank punctures, impacts caused by lifting, and over- or under-pressurization could cause fuels and oxidizers to come in contact with one another, causing fire and fragmentation hazards. This phase includes the final assembly of solid rocket motors at a launch pad or other facility. Any motor impact on the ground during these activities could cause propellant ignition.

Checkout at a launch pad may involve a number of hazards due to the presence of solid propellant and hypergolic propellant stages. Any accident causing interaction between hypergolic and solid propellants can result in fires, pressure ruptures, and propulsive flight.

During ordnance installation, inadvertent initiation of electro-explosive devices (EEDs) is possible. This does not pose a threat to the public (although it does to the vehicle and personnel) because EEDs have a small quantity of explosive and are not, by design, capable of detonating propellants.

The main hazard during propellant loading is over or under-pressurization of liquid propellant tanks, which may cause major spills of fuels and oxidizers. These events could lead to significant explosive yield, which is the energy released by an explosion.

Final launch preparations, which begin just prior to flight, involve a fully fueled launch vehicle. Systems are switched to internal power, and liquid propellant systems are brought to flight pressure. A mishap here could lead to significant explosive yield. The explosive yield of a launch vehicle exploding on a launch pad is based on shock impact for solid propellants, and non-dynamic mixing of liquid propellants by, for example, the failure or interior bulkheads in the launch vehicle.

Reason for Proposing Explosive Siting Criteria

After careful consideration, the FAA decided it had to propose explosive siting criteria to protect the public from explosive hazards associated with the operation of a launch site. Although the FAA places much of the responsibility for safety of hazardous ground operations on the launch operator, the FAA believes that the siting requirements would be better addressed by a launch site operator. This is because the siting requirements will more efficiently be satisfied prior to construction of launch site facilities rather than afterwards. The FAA does not intend to duplicate or supercede existing regulatory frameworks. Although both the Bureau of Alcohol, Tobacco and Firearms (ATF) and the Occupational Safety and Health Administration (OSHA) have regulations on explosives, neither provides all the quantity-distance criteria applicable to launch site necessary to protect the public.[4]

ATF has jurisdiction over the storage of commercial explosives in order to provide for public safety. The storage requirements in 27 CFR part 55, Commerce in Explosives, include construction, separation distances, and some storage compatibility provisions. They also cover items such as licensing, records, and other administrative procedures.

Two gaps in coverage require FAA involvement, namely, the handling of explosives and the treatment of liquid bi-propellants. In the first instance, ATF regulations are limited to storage, not the use or handling of an explosive. Many of the activities that occur on a launch site will not constitute storage. These activities include moving or handling solid rocket motors and other ordnance for the purpose of preparing a launch vehicle for flight, and the build-up and checkout of a launch vehicle on a launch pad. The FAA's proposed regulations are required to ensure the safety of the public from these activities. Additionally, ATF regulations only address solid explosives and liquid mono-propellants. Large quantities of liquid by-propellants are often used on existing launch sites, and many of these bi-propellants pose an explosive hazard to the public. The FAA is proposing rules to ensure the safe use and storage of liquid bi-propellants.

OSHA explosives requirements are contained in 29 CFR 1910.109. Explosives and Blasting Agents. These requirements apply to the manufacture, keeping, having, storage, sale, transportation, and use of explosives, blasting agents and pyrotechnics. OSHA regulations do not address public safety. For example, 29 CFR 19 10.109 only includes Q-D requirements for the separation of magazines from each other. OSHA requirements do not address public areas such as inhabited buildings, passenger railways, and public highways. The FAA believes Q–D requirements that adequately separate the public from the effects of an explosion are necessary to protect the public.

The FAA recognizes that procedural measures may also be employed to achieve explosive safety. For example, if two customers of a launch site operator intend to conduct explosive handling operations in adjacent facilities that are not sited for public area distances, a launch site operator may schedule their operations at different times and keep one facility vacant to maintain safety. A licensee who proposed such measures as a substitute for the siting criteria proposed in this rulemaking would have to anticipate license terms and conditions that achieve an equivalent level for safety.

Current Q-D Standards

Current standards effectively mitigate explosive hazards on federal launch ranges. The FAA, therefore, studied these standards in order to adopt the most relevant parts in its proposed Q–D standards. DOD, NASA, and, for storage, AFT, have explosive standards designed to protect the public.

The DOD standard, "DOD STD 6055.9. DOD Ammunition and Explosives Safety Standards." (Aug. 1997), is the standard used for explosive siting on DOD launch sites and for commercial launch sites located on DOD property. DOD 6055.9–STD defines general explosive safety criteria for use throughout the DOD, and

[3] ATF regulations cover the long-term storage of explosives.

[4] Another agency. the Research and Special Programs Administration (RSPA), DOT, has regulations for the commercial shipment of explosives (and other hazardous material) by rail, motor vehicle, cargo aircraft and ship within the United States. The regulations are found in Title 49 of the Code of Federal Regulations

establishes protection criteria for personnel and assets such as facilities, equipment, and munitions. The DOD standard provides quantity-distance criteria to protect against overpressure and fragments, and permissible exposure levels to protect against thermal hazards.

The Q-D criteria in DOD STD 6055.90 constitute a refinement of the American Table of Distances (ATD), originally published in 1910 by the Institute of Makers of Explosives. Authors of the ATD criteria acknowledged very early that listed separation distances do not provide absolute safety. The magnitude of the hazard is simply mitigated to a level the ATD authors deemed to be acceptable. Because of this, the FAA encourages license applicants to use greater distances where practicable.

DOD STD 6055.9 also provides information relating to the construction and siting of facilities that are potential explosive sites or that may be exposed to the damaging effects of explosions. The effects of potential explosions may be altered significantly by construction features that limit the amount of explosives involved, attenuate resultant blast overpressure or thermal radiation, and reduce the quantity and range of hazardous fragments and debris. DOD also includes additional criteria for electrical safety and lightning.

ATF also adopted the ATD in its approach to facility siting. ATF regulations provide procedural and substantive requirements regarding, in relevant part. the issuance of user permits and the storage of explosive materials. AFT specifies tables of distances for high explosives, low explosives, and blasting agents. The tables governing high explosives and low explosives are very pertinent to launch site operations.

As noted, the scope of operations within a launch site goes beyond the on-site receipt, transfer and storage of explosives within ATF jurisdiction. A launch site may have a number of launch vehicle and payload customers on site who posses liquid and solid propellants that are being used for incorporation into a launch vehicle or payload.

NASA's safety standards and policy for operations involving explosives are contained in 'Safety Standard for Explosives, Propellants, and Pyrotechnics," NSS 1740.12 (Aug. 12, 1993) (NASA Standard). This document contains a uniform set of standards for all NASA facilities engaged in the development. manufacture, handling, storage, transportation, processing, or testing of explosives. Like the DOD standard, the NASA standard contains guidelines and standards for explosives operations in order to safeguard not only the public, but personnel and property. It covers not only Q-D criteria, but personnel training, operating procedures, and other policies such as the use of all available advances in protective construction to provide the safety work environment to prevent or minimize the exposure of personnel and facilities to explosives hazards when performing NASA program activities.

FAA's Proposed Use of NASA and DOD Q-D Standards for Licensed Operation of a Launch Site

Because the NASA and DOD standards are similar, and because both the NASA and DOD standards comprehensively cover explosive hazards at a launch site, the FAA has used both as a guide in proposing the rules in subpart B. However, the FAA proposes to employ the tables and many of the definitions of the NASA standard specifically.

The relevant differences for solid explosives between NASA, DOD, and ATF are not significant. The NASA and ATF table for division 1.3 explosives (discussed below) are identical except that ATF requirements stop at 300,000 pounds. The NASA division 1.3 table is also the same as the DOD standard except that the DOD standard has more increments.

The relevant differences for liquid propellants between the NASA and DOD standards are also minor.[5] The hazard groups that liquid propellants fall into, discussed below, are identical in the two standards. The values in the table used for explosive equivalents are also identical for quantities greater than 35,000 pounds. A discrepancy exists under 35,000 pounds because the DOD requirement is based on a table used for division 1.1 solid explosives.[6] The distance specified below 35,000 pounds in the DOD table is based on the ranges of hazardous fragments and firebrands from an explosion. This is appropriate for solid explosives but is not necessary for liquid propellant explosive equivalents, The NASA standard, on the other hand, has separate tables for division 1.1 solid explosives and liquid propellant explosive equivalents. The NASA table for division 1.1 solid explosives takes fragments and firebrands into account, as appropriate. NASA's table for liquid propellants does not take fragmentation into account.

Other Approaches to Explosive Safety

The FAA has taken a number of measures in order to simplify the proposed Q-D standards. The proposed requirements do not account for the use of hardening or barricades, or for any other solid propellant other than division 1.3. The proposed rules also reflect that only two liquid propellant compatibility groups are necessary. These are discussed below.

The proposed requirements do not account for hardening. Both NASA and DOD have standards for using protective construction to harden an explosive hazard facility to suppress explosion effects, and to harden an area potentially exposed to explosive hazards. In the NASA and DOD standards, the use of hardening may reduce the required distance between an explosive hazard facility and a public area. The proposed rules do not explicitly address hardening. The distances required between explosive hazard facilities and public areas assume that neither the explosive hazard facilities nor the public areas are hardened. Because of the complexity of hardening standards, the FAA believes hardening is better left to case-by-case approval. If an applicant plans to use hardening, the applicant should plan on demonstrating an equivalent level of safety to justify a reduction in applicable Q-D requirements.

Similarly, the proposed requirements do not account for the use of barricades and other protective measures to mitigate the effect of an explosion on exposed areas. An applicant proposing to use such measures in order to deviate from the proposed siting rules may apply for a waiver to the FAA, accompanied with a demonstration that the applicant achieves an equivalent level of safety.

The proposed requirements govern only one type of solid explosive, division 1.3. To classify solid propellants, the FAA is proposing to adopt the United Nations Organization (UNO) classification system for transport of dangerous goods. This classification system is reflected in DOD and NASA standards, and standards of the Department of Transportation's Research and Special Programs Administration. Propellants will be assigned the appropriate DOT class in accordance with 49 CFR part 173. The hazard classification system used by all three agencies consists of nine classes for dangerous goods with ammunition and explosives included in UNO "Class 1. Explosives." Class 1 explosives are

[5] ATF does not regulate liquid propellants, other than mono-propellants.

[6] Solid explosives, like liquid explosives. may be measured in terms of explosive equivalency. The explosive equivalency of a certain weight of solid explosive is the weight of trinitrotolucne that would provide an equivalent blast effect.

further subdivided into "divisions" based on the character and predominance of the associated hazards and on the potential for causing casualties or property damage. As defined in 49 CFR 173.50:

- *Division* 1. l-consists of explosives that have a mass explosion hazard. A mass explosion is one which affects almost the entire load instantaneously.
- *Division 1.2*—consists of explosives that have a projection hazard but not a mass explosion hazard.
- *Division 1.3*—consists of explosives that have a fire hazard and either a minor blast hazard or a minor projection hazard or both, but not a mass explosion hazard.
- *Division 1.4*—consists of explosives that present a minor explosion hazard.
- *Division 1.5*—consists of very insensitive explosives.
- *Division* I.&-consists of extremely insensitive articles which do not have a mass explosion hazard.

The FAA proposes criteria only for division 1.3. The only solid explosives for commercial launches that will likely affect separation distances on a launch site are division 1.3 propellants. Although launch vehicles frequently have components incorporating division 1.1 explosives, such as those used to initiate flight termination systems, the quantity is small. Division 1.1 explosives will not likely be present in sufficient quantities to affect the application of Q-D criteria. The only division 1.1 solid rocket motors existing today are from old military missiles which are not likely to be used at a commercial launch site. When liquid fuels and oxidizers are located together, as they would be during a fueling test, the combination has an explosive potential equal to a percentage of division 1.1 explosives. The proposed rules take such activities into account, but address liquid propellants separately from solid propellants.

The proposed regulations would not assign compatibility groups for solid propellants. The NASA and DOD standards assign solid explosives to compatibility groups. Explosives are assigned to the same group when they can be stored together without significantly increasing either the probability of an accident or, for a given quantity, the magnitude of the effects of such an accident. Because division 1.3 solid propellants are all compatible, the proposed regulations do not incorporate compatibility groups for solid propellants.

Like the DOD and NASA standards, the proposed rules classify each liquid propellant into one hazard group and one compatibility group. Classifying each liquid propellant into a hazard group is necessary because the hazards associated with different liquid propellants vary widely, and the quantity-distance relationship varies accordingly. Hazard group 1 individually represents a fire hazard, hazard group 2 individually represents a more serious fire hazard, and hazard group 3 individually represents a fragmentation hazard because propellants in this category can cause rupture of a storage container.

The proposed rules classify current launch vehicle liquid propellants. namely, liquid hydrogen (LH2). RP- 1, hydrazine (N2H4) and its variants (e.g. UDMH and Aerozine-50). hydrogen peroxide, liquid oxygen (LO2). and nitrogen tetroxide (N204). RP-1 and N204 fall into hazard group 1, hydrogen peroxide and LO2 fall into hazard group 2, and LH2 and N2H4 fall into hazard group 3. Other propellants will be classified on a case-by-case basis.

Like the NASA and DOD standards, the proposed rules also assign each liquid propellant into a compatibility group. However, unlike those standards which cover many different types of propellants, only two compatibility groups are represented in the proposed rules, group A and group C. Group A represents oxidizers, such as L02. N204. and hydrogen peroxide, and group C represents fuels. Whenever propellants of different compatibility groups are not separated by the minimum distance requirements, that is, when fuels and oxidizers are close enough to each other to potentially mix and explode, the explosive equivalency of the explosive mixture must be calculated.

Application of ATF. DOD, or NASA Standards

The storage of solid propellant and liquid mono-propellant on a launch site is covered by ATF regulations, and therefore not addressed in the FAA's proposed requirements. ATF has a permit process for the storage of solid propellants and liquid mono-propellants. The FAA's proposed rules, therefore, do not cover the separation distance between magazines, or between magazines and public areas. However, an applicant must show any magazines in its explosive site plan and their location in relation to other explosive hazard facilities. Applicants should note that on federal launch ranges DOD or NASA standards apply. These launch sites may have Q-D requirements that are different than the FAA's proposed rules.

Future Change in Liquid Propellant Requirements

The DOD Explosive Safety Board (DDESB) has initiated a DOD Explosive Safety Standard for Energetic Liquids Program, and has established an interagency advisory board called the Liquid Propellants Working Group (LPWG). The FAA is a member of this group. A number of possible inconsistencies and irregularities have been identified in the current approach to siting liquid propellants. These include Q-D criteria for most liquid propellants, possible inconsistencies in hazard group and compatibility group definitions, and possible inaccurate characterization of blast over pressure hazards of liquid propellant explosions. The purpose of the LPWG is to address issues of explosive equivalence, compatibility mixing, and quantity-distance criteria, and to develop recommended revisions to DOD STD 6055.9 addressing liquid propellants and other liquid energetic materials. The LPWG is currently consolidating all available test and accident data, and non-DOD regulatory information to provide a basis for the revisions.

Because the DDESB is possibly the best equipped group in the country to address these issues, the FAA will carefully consider its recommendations. The basic approach outlined in the proposed rule should not change. However, the DDESB is likely to specify new hazard and compatibility groups, distance values, and equivalency values, and the public may anticipate their eventual consideration and possible adoption by the FAA.

Solid and Liquid Bi-propellants at Launch Pads

The FAA is proposing a special requirement at launch pads for launch vehicles that use liquid bi-propellant and solid propellant components. The required separation distance shall be the greater of the distance determined by the explosive equivalent of the liquid propellant alone or the solid propellant alone. An applicant does not have to add the separation distances of both. This notice assumes that generally, no credible scenario exists that could produce a simultaneous explosion reaction of both liquid propellant tanks and solid propellant motors. Although not reflected in the published DOD and NASA standards, the proposed requirement constitutes current practice at federal launch ranges. The FAA is interested in the public's view on this approach.

C. Explosive Mishap Prevention Measures

Application of the proposed quantity-distance rules alone will not prevent mishaps from occurring on a launch site. The proposed Q-D rules merely reduce the risk to the public to an acceptable level if a mishap occurs, and if the public is kept away from the mishap by a distance that is at least as great as the public area distance. Safe facility design and prudent procedural measure are critical to preventing a mishap from occurring in the first place. Because visitors to a launch site cannot be protected by prudent site planning alone, the FAA has proposed launch site operator responsibilities to prevent mishaps involving propellants.

The FAA considered measures taken at federal launch ranges to prevent inadvertent initiation of propellants. For this notice the FAA focused on those measures that are appropriate to be taken by a launch site operator. For the most part, the FAA considers it prudent to place the responsibility on a launch site operator for those measures that must be built into facilities. Requirements of a more operational nature will be covered in another rulemaking.

The FAA focused on construction measures intended to prevent inadvertent initiation of propellant from electricity. These are particularly important for electro-explosive devices. Electric hazards include electrostatic discharge such as lightning, static electricity, electric supply systems, and electromagnetic radiation. As discussed below, the FAA is proposing launch site operator requirements for two of these electric hazards: Lightning and electric supply systems. Other measures were considered but rejected because the FAA's planned rulemaking on launches from non-federal launch sites will cover other procedural measures to guard against inadvertent initiation of propellants from electricity. Moreover, the FAA believes launch and launch site operators will implement prudent design and construction measures to comply with local, state, and other federal law. such as OSHA requirements. The FAA is interested in public views *on* this approach and any need to address other facility requirements.

Lighting Protection

Rocket motors may be energized to dangerous levels by lightning. The primary method of protecting against damage from lightning is to provide a means to direct a lightning discharge directly to the earth without causing harm to people or property. A lightning protection system consists of a system of air terminals such as lightning rods, a system of ground terminals, and a conductor system connecting the air terminals to the ground terminals. These systems are typically installed during construction.

The FAA proposes to impose certain requirements *on* launch site operators involving lightning protection. The requirements are based on current industry practice, namely, DOD STD 6055.9, chapter 7, and the NASA standard's chapter 5. Each of those standards define, in detail, minimum explosives safety criteria for the design, maintenance, testing and inspection of lightning protection systems. The FAA's proposed rules are not as detailed as those standards so that an applicant may have more flexibility in meeting performance standards. The FAA expects applicants to achieve the level of safety represented by the DOD and NASA standard.

The FAA's proposed rules were derived from the DOD and NASA standards, which are similar to each other. Like NASA and DOD, the proposed rules require lightning protection for all explosives hazard facilities. The design of lightning protection systems includes air terminals, low impedance paths to the ground, referred to as down conductors, and earth electrode systems. An air terminal is a component of a lightning protection system that is able to safely intercept lightning strikes. Air terminals may include overhead wires or grids, vertical spikes, or a building's grounded structural elements. Air terminals must be capable of safely conducting a lighting strike. Down conductors, such as wires or structural elements having high current capacity, provide low impedance paths from the air terminals described above to an earth ground system. Earth electrode systems dissipate the current from a lightning strike to ground.

Bonding and surge protection are other important considerations for lightning protection systems. Metallic bodies, such as fences and railroad tracks near an explosive hazard facility, should be bonded to ensure that voltage potentials due to lightning are equal everywhere in the explosive hazard facility. Lightning protection systems should also include surge protection for all incoming conductors, such as metallic power, communication, and instrumentation lines coming into an explosive hazard facility, so as to reduce transient voltages due to lightning to a harmless level.

The FAA proposes to adopt a provision of DOD STD 6055.9 that exempts the need for a lightning protection system when a local lightning warning system is used to permit operations to be terminated before the incidence of an electrical storm, if all personnel can and will be provided with protection equivalent to a public traffic route distance, which is equivalent to the FAA's proposed public area distance. The FAA is interested in views on this exception, and whether it is sensible in light of the small chance that lightning may cause inadvertent solid rocket motor flight. The FAA is also interested in views on whether other exceptions should be added.

The National Fire Protection Association (NFPA). Batterymarch Park, Quincy, Massachusetts. has published a Lightning Protection Code, NFPA 780 (1995). The FAA is interested in the public's views on the use and applicability of this code.

Static Electricity

Rocket motors may be energized to dangerous levels by extraneous electricity such as static electricity, fields around electric supply lines, and radio frequency emissions from radio, radar, and television transmitters,

Static electricity is generally created by a transfer of electrons from one substance to another caused by friction or rubbing. The generation of static electricity is not in itself a hazard, The hazard arises when static electricity is allowed to accumulate, subsequently discharging as a spark across an air gap in the presence of highly flammable materials or energetic materials such as propellants. The NASA standard states that:

> In order for static to be a source of ignition, five conditions must be fulfilled: (1) A mechanism for generating static electricity must be present. (2) a means of accumulating or storing the charge so generated must exist, (3) a suitable gap across which the spark can develop must be present, (4) a voltage difference sufficient to cause electrical breakdown or dielectric breakdown must develop across the gap, and (5) a sufficient amount of energy must be present in the spark to exceed the minimum ignition energy requirements of the flammable mixture.[7]

Electra-explosive devices are particularly susceptible to static discharge. The primary method used to neutralize static potential is to create an electrical path between the objects so that the potential charges will be equalized. This path can be generated by bonding potential charged objects to each other and humidifying or ionizing

[7] NASA Standard at 5–29.

the air to create a path for the charge to bleed off.

Both NASA and DOD have standards to control static electricity. For example, they have standardsa to prevent static electricity accumulations that are capable of initiating combustible dusts, gases, flammable vapors, or exposed electroexplosive devices. The standards build on the National Electrical Code, published by the National Fire Protection Association as NFPA 70, which establishes standards for the design and installation of electrical equipment and wiring in hazardous locations containing combustible dusts, flammable vapors and gases.

These standards require personnel and equipment in hazardous locations and locations where static sensitive EEDs are exposed to be grounded in a manner to effectively discharge static electricity. For example, the NASA standard requires personnel to wear static dissipation devices such as legstats and wriststats. Conductive shoes are required when handling, installing, or connecting or disconnecting EEDs.

Solid rocket motors may also be initiated by static electricity. Material contact, specifically, the rubbing or removing of one material from another, such as removing tooling from a motor, can produce a static charge buildup in solid rocket motors. This energy, when released under appropriate conditions, may lead to a cascade discharge and propellant ignition. A number of incidents have occurred due to static electricity, including a Pershing II missile burn in West Germany, a Stage I Peacekeeper missile initiation at a manufacturing facility (due to the pulling of a tool), and a Minuteman State II missile ignition on the rapid pulling of the core.[9]

Although the control of static electricity is important for public safety, the FAA is not proposing any requirements in this rulemaking. The FAA believes that the control of static electricity in launch operations is primarily procedural in nature, and is best covered by the FAA in a future rulemaking on launches. The FAA is interested in the public's view on whether requirements should be placed on launch site operators.

Electric Supply Systems

As noted above, rocket motors may be energized to dangerous levels by extraneous electricity such as fields around high tension wires. Both the NASA standard, chapter 5. and DOD STD 6055.9. chapter 6, have similar standards to address the hazards from fields around high tension wires.

The FAA proposes rules that are similar to both the NASA and DOD standard. As in those standards, the proposed rules require electric power lines to be no closer to an explosive hazard facility than the length of the lines between the poles or towers that support the lines, unless effective means is provided to ensure that energized lines cannot, on breaking, come in contact with the explosive hazard facility. The proposed rules also require towers or poles supporting electric distribution lines that carry between 1.5 and 69 KV. or electrical transmission lines that carry 69 KV or more, to be no closer to an explosive hazard facility than the public area distance for that explosive hazard facility.

Electromagnetic Radiation

Rocket motors may be energized to dangerous levels by extraneous electricity such as radio frequency emissions from radio, radar, and television transmitters. Radio frequency (RF) emitters may present a hazard to the public by direct exposure to high levels of RF energy. The levels of RF energy that are hazardous are dependent on frequency. For instance, "ANSI C95.1–1991 Electromagnetic Fields, Safety Levels With Respect to Human Exposure to Radio Frequency" defines the maximum safe level for personnel for frequencies between 0.003 and 0.1 MHz at 100mWcm ^{2}, and a level of 180 mW/Cm ^{2} for frequencies between 1.34 and 3.0 MHz. More importantly for this proposal, RF emitters may present hazard to ordnance. At launch sites today, design and procedural methods are used to mitigate risks to personnel and ordnance. Separation distances are also used to ensure personnel and ordancne are not exposed to hazardous levels.

One hazard of particular importance on a launch site is the accidental firing of electroexplosvie devices by stray electromagnetic energy. A large number of these devices are initiated by low levels of electrical energy and are susceptible to unintentional ignition by many forms of direct or induced stray electrical energy, such as from lightning discharges, static electricity, and radio frequency due to ground and airborne emitters.

One federal launch site operator, the U.S. Air Force, defines its RF requirements in "Air Force Manual (AFM) 91–201, Explosives Safety Standards," (Jan. 1998). Safe separation distance criteria are contained in section 2.58. A table is provided that gives minimum separation distances between EEDs (within explosive hazard facilities) and the transmitting antenna of all RF emitters. The distances are based on the frequency, transmitter power, and power ratio of the transmitting antenna. For worst-case situations, safe separation distances are based on frequency and effective radiated power. "Worst-case" is defined as EEDs that are the most sensitive in the Air Force inventory, unshielded, having leads or circuitry which could inadvertently be formed into a resonant dipole, loop or other antenna. Where EEDs are in less hazardous configurations, the standard allows for shorter distances. The standard also allows for the conduct of power density surveys to ensure safety, in lieu of using the minimum safe separation distances defined from the table and figure. Power density surveys measure the actual conditions in an area here EEDs may be located, and are appropriate when the minimum distances cannot be complied with, for whatever reason, and when more than one transmitter is operating in a certain area at different frequencies.

The FAA has not chosen to specifically address RF hazards in this proposal. OSHA covers direct exposure of personnel to RF.[10] Although the FAA is not aware of any other federal regulations that specifically protect the public from the accidental firing of electroexplosive devices by stray electromagnetic energy, the FAA with this proposal is focussing on those measures that a launch site operator must build into its facilities. The distance requirements discussed above were considered by the FAA but other procedural means exist to mitigate RF hazards, including the FAA's proposed scheduling and coordination requirement for launch site operators. The procedural requirements of launch operators, covered in a separate rulemaking, in conjunction with the requirement in proposed § 420.5 for a licensee to develop and implement procedures to coordinate operations carried out by launch site customers and their contractors, should prove adequate to address RF hazards. The FAA is interested in the public's view on whether other requirements, such as distance requirements, should be placed on launch site operators.

D. Launch Site Location Review

The FAA intends a launch site location review to determine whether the location of a proposed launch site

[8] DOD Standard. chapter 6. NASA Standard, chapter 5.

[9] "JANNAF Propulsion Systems Hazards Subcommittee Electrostatic Discharge Panel Report." CPIA Publication 510 (Mar. 1989).

[10] 29 CFR 1910.97.

would jeopardize public health and safety. To that end, the FAA proposes to determine whether at least one hypothetical launch could take place safely from a launch point at the proposed site. The FAA does not intend to license the operation of a launch site from which a launch could never safely take place. An applicant should, however, bear in mind that an FAA license to operate a launch site does not guarantee that a launch license would be issued for any particular launch proposed from that site. Accordingly, much of the decision making with respect to whether a particular site will be economically successful will rest, as it should, with a launch site operator, who will have to determine whether the site possesses sufficient flight corridors for economic viability. The FAA seeks through a location review only to ensure that at least one flight corridor exists that may be used safely for a hypothetical launch.

Accordingly, prior to issuing a license to operate a launch site at the proposed location, the FAA will ascertain whether it is possible to launch at least one type of launch vehicle on at least one trajectory from each launch point at the proposed site while meeting the FAA's collective risk criteria. The FAA wants to ensure that there exists at least one flight corridor or set of impact dispersion areas from a proposed launch site that would contain debris away from population. Launch is a dangerous activity that the FAA will allow to occur only when the risk to people is below an expected casualty (E,) of 30×10^{-6}. In other words, if there are too many people around a launch site or in a flight corridor the FAA will not license the site. The FAA's proposed methods for determining flight corridors and impact dispersion areas and estimating E_c are designed to ascertain whether a hypothetical flight corridor would avoid creating too much risk.

All this is not to say that the FAA proposed to require an applicant for a license to operate a launch site to perform a complete flight safety analysis for a particular launch. The FAA recognizes that an applicant may or may not yet have customers or a particular launch vehicle in mind. Accordingly, the FAA's proposed launch site location review methods only approximate, on the basis of certain assumptions and recognizing that not all factors need to be taken into account, a full flight safety analysis that would be normally be performed for an actual launch. Of course, if an applicant does have a customer who satisfies the FAA's flight safety criteria for launch and obtains a license for launch from the site, that showing would also demonstrate to the FAA that a launch may occur safely from the proposed site, and the FAA could issue a license to operate the launch site on the basis of the actual launch proposed.

Bear in mind also that the focus of FAA's proposed launch site location review methods is on expendable launch vehicles with a flight history. The reusable launch vehicles (RLV) currently proposed by industry vary quite a bit. Accordingly, the FAA considered it unwise to define a detailed analytical method for determining the suitability of a launch site location for RLVs. An applicant proposed a launch site limited to the launch of reusable launch vehicles would still need to define a flight corridor and conduct a risk analysis if population were present within the flight corridor, but the FAA will review such an analysis on a case-by-case basis consistent with the principles discussed in this rulemaking.

Similarly, the FAA has chosen not to define a detailed analytical method for determining the suitability of a launch site location for unproven launch vehicles. An applicant proposing a launch site limited to the launch of unproven launch vehicles would have to demonstrate to the FAA that the launch site is safe for the activity planned.

A launch site location review would provide an applicant with alternative methods for demonstrating that a proposed launch site satisfies FAA safety requirements. Specifically, the applicant must demonstrate that a flight corridor or set of impact dispersion areas exist that do not encompass populated areas or that do not give rise to an E_c risk of greater than 30×10^{-6}. Each proposed launch point must be evaluated for each type of launch vehicle, whether expendable orbital, guided sub-orbital or unguided sub-orbital, or reusable, that an applicant proposes would be launched from each point.

Each of the three methods the FAA proposes for evaluating the acceptability of a launch site's location require an applicant to identify an area, whether a flight corridor or a set of impact dispersion areas, emanating from a proposed launch site. That area identifies the public that the applicant must analyze for risk of impact and harm. The FAA proposes to have an applicant who anticipates customers who use guided orbital launch vehicles define a flight corridor for a class of vehicles launched from a specific point along a specified trajectory, that extends 5,000 nautical miles from the launch point or until the launch vehicle's instantaneous impact point leaves the earth's surface, whichever is sooner. For guided sub-orbital launch vehicles, the flight corridor would end at an impact dispersion area of a final stage. An applicant would have to demonstrate either that there are no populated areas within the flight corridor or that the risk to any population in the corridor does not exceed the FAA's risk criteria. Similarly, for the sub-orbital launch of an unguided vehicle, an applicant would analyze the risks associated with a series of impact dispersion areas around the impact points for spent stages. If there are people in the dispersion areas, the applicant must demonstrate that the expected casualties from stage impacts do not exceed the FAA's risk criteria.

E_c, or casualty expectancy, represents the FAA's measure of the collective risk to a population exposed to the launch of a launch vehicle. The measure represents the expected average number of casualties for a specific launch mission. In other words, if there were thousands of the same mission conducted and all the casualties were added up and the sum divided by the number of missions, the answer and the mission's expected casualty should statistically be the same. This E_c value defines the acceptable collective risk associated with a hypothetical launch from a launch point at a launch site, and, as prescribed by the proposed regulations, shall not exceed an expected average number of casualties of 0.00003 (30×10^{-6}) for each launch point at an applicant's proposed launch site. This E_c value defines acceptable collective risk. In contrast to individual risk, which describes the probability of serious injury or death to a single person, the launch industry's common measure of risk is collective risk. The E_c value proposed originated with the Air Force's measure of acceptable risk. "EWR 127-1," Sec. 1.4. 1-12. Relying on the Air Force measure, the FAA proposed the adoption of collective risk and a risk level of 30×10^{-6} for licensed launches in an earlier proceeding. "Commercial Space Transportation Licensing Regulations," (62 FR 13216. 13229-30 (Mar. 19. 1997). The FAA now proposes to use the same measure for evaluating the suitability of a proposed launch site location.

Collective risk reflects the probability of injury or death to all members of a defined population set-in this case, those located within the flight corridor or set of impact dispersion areas being analyzed-placed at risk by a launch event. Collective risk constitutes the sum total launch related risk, that is, the

probability of injury or death, to that part of the public exposed to a launch. Collective risk is analogous to an estimate of the average number of people hit by lightning each year, while individual annual risk would be an individual's likelihood of being hit by lightning in any given year. Collective risk may be expressed in terms of individual risk if certain factors associated with any given launch are taken into account. Collective risk may be expressed in terms of individual risk when the exposed population consists of one person. Also, individual risk may be-and will be, in most instances-less than collective risk, depending on the size of the population exposed. For example, a collective E_c risk of 30×10^{-6} for a defined population of one hundred thousand people exposed to a particular launch results (assuming the risk is spread equally throughout the defined population) in a probability of injury or death to any one exposed individual of 3×10^{-10} (three per ten billion).

The FAA's proposed methods for identifying a flight corridor or impact dispersion areas distinguish between guided orbital launch vehicles with a flight termination system (FTS), guided sub-orbital launch vehicles with an FTS. and unguided sub-orbital launch vehicles without an FTS.[11] For purposes of this proposal, references to a guided launch vehicle, whether orbital or sub-orbital, may be taken to mean that the vehicle has an FTS. References to an unguided sub-orbital may be understood to mean that the vehicle does not possess an FTS.

The FAA's proposed regulations divide guided orbital launch vehicles into four classes, with each class defined by its payload weight capability, as shown in table 1. Sub-orbital launch vehicles are not divided into classes by payload weight, but are categorized as either guided or unguided. Table 2 shows the payload weight and corresponding classes of existing orbital launch vehicles. For a launch site intended for the use of orbital launch vehicles, an applicant would define a hypothetical flight corridor from a launch point at the proposed launch site for the largest launch vehicle class anticipated-which the FAA anticipates would be based on expected customers.

TABLE 1.—CLASS OF LAUNCH VEHICLES BY PAYLOAD WEIGHT

[LBS]

	Orbital launch vehicles			
100 nm orbit	Small	Medium	Medium large	Large
28° inc.[1]	≤4,400	>4,400 to ≤11,100	>11,100 to <18,500	>18,500
90° inc.[2]	≤3,300	>3,330 to ≤8,400	>8,400 to ≤15,000	>15,000

[1] 28° inclination orbit from a launch point at 28° latitude.
[1] 90° inclination orbit.

TABLE 2.—CLASSIFICATION OF COMMON GUIDED ORBITAL EXPENDABLE LAUNCH VEHICLES

Vehicle	Payload weight (lbs)	Payload weight (lbs)	Class
	100 nm Orbit 29° inc.	100 nm Orbit 90° inc.	
Conestoga 1229	600	450	Small.
Conestoga 1620	2,250	1,750	Small.
LML V–1	1,755	1,140	Small.
LML V–2	4,390	3,290	Small.
Pegasus	700	N/A	Small.
Pegasus XL	1,015	769	Small.
Scout	560	460	Small.
Taurus	3,100	2,340	Small.
Atlas II	14,500	12,150	Medium.
Atlas 2A	16,050	13,600	Medium.
Delta 6920	8,780	6,490	Medium.
Delta 7920	11,220	8,575	Medium.
Titan II	N/A	4,200	Medium.
Atlas 2AS	19,050	16,100	Medium/Large.
Titan III	31,200	N/A	Medium/Large.
Titan IV	47,400	41,000	Large.

Methods for estimating the risk posed by the operation of a launch site for guided orbital and sub-orbital launch vehicles are presented in proposed appendices A. B and C. Appendix A contains instructions for creating a flight corridor for guided orbital and sub-orbital launch vehicles. Appendix B provides an alternative method to appendix A. Appendix B also instructs an applicant how to create a flight corridor for guided launch vehicles, but provides more detailed calculations to employ so that, although an appendix B flight corridor is typically less conservative than that of appendix A, it should provide more representative of actual vehicle behavior. Appendix C

[11] This proposal does not propose a means for analyzing risks posed by a launch site for the launch of unguided suborbital launch vehicles that employ FTS. Historically. few of these vehicles have been launched. In the event an applicant for a license to operate a launch site wishes to operate a launch site only for such vehicles. the FAA will handle the request on a case by case basis. The FAA does note, however. that unguided suborbital launch vehicles that in the past have been launched with an FTS were usually launched with the FTS because the launch was otherwise too close to populated areas for the type of vehicle and trajectory flown.

contains the FAA's proposed method for applicants to analyze the risk posed by guided launch vehicles within a flight corridor created under appendix A or B. Unguided sub-orbital launch vehicles are presented in appendix D, which describes how an applicant should estimate impact dispersion areas and analyze the risk in those areas.

Appendix A is less complex, but generates a larger flight corridor, than the methodology of appendix B. No local meteorological or vehicle trajectory data are required to estimate a flight corridor under appendix A. Because it is a simpler methodology, an applicant may want to use it as a screening tool. If an applicant can define a flight corridor for a single trajectory, using appendix A, that does not overfly populated areas, the applicant may satisfy the launch site location review requirements with the least effort. If. however, the corridor includes populated areas, the applicant has the choice of creating an appendix B flight corridor, which may be more narrow, or conducting a casualty expectancy analysis. An applicant is not required to try appendix A before employing appendix B.

The FAA's proposed location review reflects a number of assumptions designed to keep the review general rather than oriented toward or addressing a particular launch. These assumptions are discussed more fully below, but may be summarized briefly. The location reviews for appendices A and B flight corridors reflect an attempt to ensure that launch failure debris would be contained within a safe area. Successful containment must assume a perfectly functioning flight termination system. A perfectly functioning flight termination system would ensure that any debris created by a launch failure would be contained within a flight corridor. When the high risk event is not launch failure but launch success, as tends to be the case with an unguided sub-orbital launch vehicle that does not employ an FTS. the FAA still proposes a location review based on an assumption of containment.

The approaches provided in the four proposed location review appendices are based on some comment assumptions that reflect limitations of the launch site location review analysis. The FAA is not requiring an application to analyze the risks posed to the public by toxic materials that might be handled at the proposed site, nor the risk to ships or aircraft from launch debris or planned jettisoning of stages. The FAA recognizes that these assumptions represent a limitation in the launch site location review. The FAA intends that these three risks will be dealt with through pre-launch operational controls and launch commit criteria which will be better identified as part of a launch license review. All launches that take place from an approved U.S. launch site will either be regulated by the FAA through a launch license or will be U.S. government launches that the government carries out for the government.

The two methods for creating guided launch vehicle flight corridors are intended to account for launch vehicle failure rate, malfunction turn capability, and the launch vehicle guidance accuracy as defined by the impact dispersions of these vehicles. The premise undergirding each of these proposed methods is that debris would be contained within the defined flight corridor or impact dispersion areas. Accordingly, for purposes of a launch site location review, only the populations within the defined areas need to be analyzed for risk. The FAA recognizes that were a flight termination system fail to destroy a vehicle as intended, a launch vehicle could stray outside its planned flight corridor. That concern will be better accommodated through another forum, namely, the licensing of a launch operator and the review of that launch operator's flight safety system. Because a containment analysis only looks at how far debris would travel in the event an errant vehicle were destroyed, the containment analysis has to assume a perfectly functioning flight termination system. In other words, for purposes of analyzing the acceptability of a launch site's location for launching guided expendable launch vehicles, the FAA will assume that a malfunctioning vehicle will be destroyed and debris will always impact within acceptable boundaries. Accordingly, the FAA does not propose to explore, for purposes of determining the acceptability of a launch site's location, the possibility that a vehicle's flight termination system may fail and that the vehicle could continue to travel toward populated areas. Any proposed site may present such risks-indeed, any proposed launch presents such risks—but they are best addressed in the context of individual launch systems. This working assumption of a perfectly reliable flight termination system will not, of course, apply to the licensing of a launch of a launch vehicle. The FAA will consider the reliability of any particular launch vehicle's FTS in the course of a launch license review. From a practical standpoint, this means that for the launch site location review, both nominal and failure-produced debris would be contained within a flight corridor, obviating the need for risk analyses that address risk outside of a defined flight corridor or set of impact dispersion areas.

Additionally, the FAA does not propose to require an applicant to analyze separately the risks posed by the planned impact of normally jettisoned stages from a guided expendable launch vehicle, except for the final stage of a guided sub-orbital launch vehicle. The FAA does not consider intermediate stage impact analysis necessary to assess the general suitability of a launch point for guided expendable launch vehicles because the impact location of stages is inherently launch vehicle-specific, and the trajectory and timing for a guided launch vehicle can normally be designed so that the risks from nominally jettisoned stages will be kept to acceptable levels. A launch license review will have to ensure that vehicle stages are not going to impact in densely populated areas. Risk calculations performed for launches from federal launch ranges demonstrate a relatively low risk posed by controlled disposition of stages in comparison to the risk posed by wide-spread dispersion of debris due to vehicle failure.

Each of the FAA's proposed approaches to defining flight corridors or impact dispersion areas is designed to analyze the highest risk launch event associated with a particular vehicle technology. This is not meant to imply that lower risk launch events are necessarily acceptable; only that they will not be considered in the course of this review. For a guided orbital launch vehicle, that event is vehicle failure. For an unguided sub-orbital launch vehicle, the launch event of highest risk is vehicle success, namely, the predicted impact of stages. For a guided launch vehicle the overflight risk, which results from a vehicle failure followed by its destruction (assuming no FTS failure), is the dominant risk. Risks from nominally jettisoned debris are subsumed in the overflight risk assessment. For an unguided sub-orbital launch vehicle, the FAA proposes that risk due to stage impact be analyzed instead of the overflight risk. This distinction is necessitated by the fact that the failure rate during thrust is historically significantly lower for unguided vehicles than for guided vehicles. Current unguided launch vehicles with many years of use are highly reliable. They do not employ an FTS; therefore, debris pieces usually consist of vehicle components that are not broken up. Another reason for the

difference between analyses is that unguided vehicle stage impact dispersions are significantly larger than guided vehicle impact dispersions. These differences add up to greater risk within an unguided launch vehicle stage impact dispersion area than the areas outside the dispersion areas. Therefore, a risk assessment is only performed on those populations within an unguided launch vehicle stage impact dispersion area.

An applicant must define an area called an overflight exclusion zone (OEZ) around each launch point, and the applicant must demonstrate that the OEZ can be clear of the public during a launch. An OEZ defines the area where the public risk criteria of 30×10^{-6} would be exceeded if one person were present in the open. The overflight exclusion zone was estimated from risk computations for each launch vehicle type and class. An applicant must define an OEZ because launch vehicle range rates are slow in the launch area, launch vehicle effective casualty areas. the area within which all casualties are assumed to occur through exposure to debris, are large, and impact dispersion areas are dense with debris so that the presence of one person inside this hazardous area is expected to produce E_c values exceeding the public risk criteria. Accordingly, an applicant would either have to own the property, demonstrate to the FAA that there are times when people are not present, or that it could clear the public from the overflight exclusion zone prior to a launch. Evacuating an overflight exclusion zone for an inland site, might, for example, require an applicant to demonstrate that agreements have been reached with local officials to close any public roads during a launch. The FAA seeks comments on the feasibility of evacuating areas inland and on the impact of the OEZ requirement on the ability to gain a license for an inland site.

E. License Conditions

A license may contain conditions flowing from the various reviews conducted during the application process. For example, a license granted following approval of a launch site location would be limited to the launch points analyzed, and the type and class of vehicle used in the demonstration of site location safety. An applicant may choose to analyze all three types of launch vehicles in its application. An FAA launch site operator license authorizing the operation of a launch site for launch of an orbital expendable launch vehicle would allow the launch of vehicles from the site that were less than or equal to the class of launch vehicle, based on payload weight, used to demonstrate the safety of the site location. If a licensee later wanted to offer the launch site for the launch of a larger class of vehicles or a different type of launch vehicle, such as an unguided sub-orbital launch vehicle, the licensee would be required to request a license modification and demonstrate that the larger vehicle or different type of vehicle could be safely launched from the launch site. Likewise, the addition of a new launch point would require a license modification. The demonstration would be based on the same kinds of analyses used for the original license. In some cases, a licensee might be able to use the safety analyses performed by a launch operator to meet location review requirements.

Although the authority granted by the launch site operator license would be limited to certain types or classes of vehicles, the license would not represent a guarantee that the FAA would necessarily license any particular launch from an approved launch site. The demonstration is intended to ensure that the location of the launch site can safely support at least some type of vehicle, launched on a specific trajectory. The planned launch of an actual vehicle may differ from the hypothetical trajectory or vehicle characteristics used for the launch site location demonstration, potentially posing different risks to the public than those used in the site location demonstration. In addition to the protection provided by a safe launch site location, the safety of any actual flight of a launch vehicle will be dependent on the safety procedures, personnel qualifications, safety systems, and other elements of the proposed launch. Consequently, each launch operator, other than the US. Government, must obtain a launch license for its specific operations.

F. Operational Responsibilities

The FAA is proposing to impose certain operational responsibilities on an operator of a launch site. In addition, the FAA proposes to distinguish between activities covered by a license to operate a launch site and those covered by a launch license. Any activity that will be approved as part of a launch license will not be covered in a launch site operator license even if the launch site operator provides the service. For example, because a launch licensee will need to assure the adequacy of ground tracking, approval of ground tracking systems will be handled in the launch license process even if a launch site operator provides the service. Similarly, in the case of ground safety, a launch site operator may provide fueling for a launch licensee, but safe procedures for fueling will be addressed in the launch license.

The operational requirements being proposed for the operator of a launch site addresses control of public access, scheduling of operations at the site, notifications, recordkeeping. launch site accident response and investigation, and explosive safety. A launch site operator licensee would be required to control access to the site. Security guards, fences, or other physical barriers may be used. Anyone entering the site must, on first entry, be informed of the site's safety and emergency response procedures. Alarms or other warning signals would be required to alert persons on the launch site of any emergency that might occur when they are on site. If a launch site licensee has multiple launch customers on site at one time, the licensee must have procedures for scheduling their operations so that the activities of one customer do not create hazards for others.

Because it is more efficient to have a single point of contact for launches conducted at a site, the FAA is proposing that the launch site operator be responsible for all initial coordination with the appropriate FAA regional office having jurisdiction over the airspace where launches will take place and the U.S. Coast Guard (where applicable) through a written agreement. The FAA's Air Traffic Service and the Coast Guard issues Notice to Airmen and Mariners, respectively, to ensure that they avoid hazardous areas. An FAA Air Route Traffic Control Center also closes airways during a launch window, if necessary. A launch site operator would be required to obtain an agreement regarding procedures for coordinating contacts with these agencies for launches from the site. The requirement for coordinating with the Coast Guard might not, of course, always be applicable, for example, for an inland launch site. A launch site operator licensee would also have to notify local officials with an interest in the launch. These would include officials with responsibilities that might be called into play by a launch mishap, such as fire and emergency response personnel.

Another operational requirement being proposed is for the operator of a launch site to develop and implement a launch site accident investigation plan containing procedures for investigating and reporting a launch site accident. This would extend similar reporting, investigation and response procedures

currently applicable to launch related accidents and incidents to accidents occurring during ground activities at a launch site. Lastly, an operator of a launch site would have responsibilities regarding explosives, specifically, those dealing with lightning and electric power lines. This has been discussed above.

III. Part Analysis

Part 417—License to Operate a Launch Site

The FAA removes and reserves part 4 17 and creates part 420 to address licensing and operation of a launch site.

Part 420-License to Operate a Launch Site

Proposed § 420.1 would describe the scope of proposed part 420. Part 420 would encompass the requirements for obtaining a license to operate a launch site and with which a licensee must comply.

Proposed § 420.3 would specify the person who must apply for a license to operate a launch site, and the person who must comply with regulations that apply to a licensed launch site operator. Because a launch site operator is someone who offers a launch site to others for launch, only someone proposing such an offer need obtain a license to operate a launch site. A launch operator proposing to launch from its own launch site need only obtain a launch license because a launch license will address safety issues related to a specific launch and because a launch license encompasses ground operations.

Proposed § 420.5 would add terms that have not been previously defined by the FAA. These definitions would apply in the context of part 420, which governs the licensing and safety requirements for operation of a launch site. These terms do not apply outside part 420. Specifically, the following terms would be defined:

Ballistic Coefficient (β) means the weight (W) of an object divided by the quantity product of the coefficient of drag (C_d) of the object and the area (A) of the object.

$$\beta = \frac{W}{(C_d \cdot A)}$$

A ballistic coefficient is a parameter used to describe flight characteristics of an object.

Compatibility means the chemical property of materials that may be located together without adverse reaction. Compatibility in storage exists when storing materials together does not increase the probability of an accident or, for a given quantity, the magnitude of the effects of such an accident. Compatibility determines whether materials require segregation. The FAA derived this definition from a NASA definition, which states that compatibility is "the chemical property of materials to coexist without adverse reaction for an acceptable period of time. Compatibility in storage exists when storing materials together does not increase the probability of an accident or, for a given quantity, the magnitude of the effects of such an accident. Storage compatibility groups are assigned to provide for segregated storage." [12] The FAA proposes to adapt the NASA definition in order to describe coexistence with greater specificity.

Debris dispersion radius (D_{max}) means the estimated maximum distance from a launch point that debris travels given a worst-case launch vehicle failure and flight termination at 10 seconds into flight. If a launch vehicle failure occurs shortly after ignition, and a flight termination system is employed, the FAA expects the debris to be contained within an area described by D_{max}.

Division 1.3 explosive means an explosive as defined in 49 CFR 173.50. That provision is part of the hazardous materials regulations of the Research and Special Programs Administration (RSPA) of the Department of Transportation. Section 173.50 defines a division 1.3 explosive as ". . . consist(ing) of explosives that have a fire hazard and either a minor blast hazard or a minor projection hazard or both, but not a mass explosion hazard." This classification is identical to the United Nations Organization classification, and is also used by NASA and the Department of Defense.

Downrange area means a portion of a flight corridor beginning where a launch area ends and ending 5,000 nautical miles (nm) from the launch point for an orbital launch vehicle, and ending with an impact dispersion area for a guided sub-orbital launch vehicle.

E,F,G coordinate system means an orthogonal, Earth-fixed, geocentric, right-handed system. The origin of the coordinate system is at the center of an ellipsoidal Earth model. The E-axis is positive directed through the Greenwich meridian. The F-axis is positive directed through 90 degrees east longitude. The EF-plane is coincident with the ellipsoidal Earth model's equatorial plane. The G-axis is normal to the EF-plane and positive directed through the north pole.

E,N,U coordinate system means an orthogonal, Earth-fixed, topocentric. right-handed system. The origin of the coordinate system is at a launch point. The E-axis is positive directed east. The N-axis is positive directed north. The En-plane is tangent to an ellipsoidal Earth model's surface at the origin and perpendicular to the geodetic vertical. The U-axis is normal to the EN-plane and positive directed away from the Earth.

Effective casualty area (A,) means the aggregate casualty area of each piece of debris created by a launch vehicle failure at a particular point on its trajectory. The effective casualty area for each piece of debris is the area within which 100 percent of the unprotected population on the ground are assumed to be a casualty, and outside of which 100 percent of the population are assumed not to be a casualty. This area is based on the characteristics of the debris piece including its size, the path angle of its trajectory, impact explosions, and debris skip, splatter, and bounce.

Explosive means any chemical compound or mechanical mixture that, when subjected to heat, impact, friction, detonation or other suitable initiation, undergoes a rapid chemical change that releases large volumes of highly heated gases that exert pressure in the surrounding medium. The term applies to materials that either detonate or deflagrate. With the exception of a minor editorial change, this proposed definition is identical to that of NASA. [13] For comparison, 49 CFR 173.50 of RSPA's regulations defines an explosive as, ". . any substance or article . . which is designed to function by explosion . or which, by chemical reaction within itself, is able to function in a similar manner even if not designed to function by explosion. ." Both definitions are consistent with each other, and the FAA proposes to use the NASA definition because it is more descriptive.

Explosive equivalent means a measure of the blast effects from explosion of a given quantity of material expressed in terms of the weight of trinitrotoluene (TNT) that would produce the same blast effects when detonated. This proposed definition is identical to the NASA definition for "TNT equivalent," and similar to the DOD definition of "explosive equivalent" which defines the term, in relevant part, as "(t)he amount of a standard explosive that, when detonated, will produce a blast effect comparable to that which results at the same distances from the

[12] NASA Standard at A-2.

[13] NASA Standard at A-4.

detonation or explosion of a given amount of the material for which performance is being evaluated." [14] DOD uses TNT as the standard explosive, thus rendering the NASA and DOD terms interchangeable. FAA proposes to use the more general term "explosive equivalent" instead of "TNT equivalent."

Explosive hazard facility means a facility at a launch site where solid or liquid propellant is stored or handled. The FAA proposes to define this term for the purpose of identifying specific hazard facilities on a launch site that present potential explosive hazards. NASA and DOD use the more general term "potential explosive site," which is defined, in part, as "the location of a quantity of explosives that will create a blast fragment, thermal, or debris hazard in the event of an accidental explosion of its contents. ." [15] As proposed, an explosive hazard facility may include a location where explosives are either handled or stored.

Flight azimuth means the initial direction in which a launch vehicle flies relative to true north expressed in degrees-decimal-degrees. For example, due east is 90 degrees.

Flight corridor means an area on the earth's surface estimated to contain the majority of hazardous debris from nominal and non-nominal flight of an orbital or guided sub-orbital launch vehicle.

Guided sub-orbital launch vehicle means a sub: orbital rocket that employs an active guidance system.

Impact dispersion area means an area representing an estimated five standard deviation dispersion about a nominal impact point of an intermediate or final stage of a sub-orbital launch vehicle. The definition is confined to proposed part 420, and should not be confused with other impact dispersion areas that may be defined by the federal launch ranges for their particular launch safety programs.

Impact dispersion factor means a constant used to estimate, using a stage apogee, a five standard deviation dispersion about a nominal impact point of an intermediate or final stage of a sub-orbital launch vehicle. Intermediate stages include all stages up to the final stage.

Impact dispersion radius (R) means a radius that defines an impact dispersion area. It applies to all launch vehicle stages.

Impact range means the distance between a launch point and the impact point of a sub-orbital launch vehicle stage.

Impact range factor means a constant used to estimate, with the use of a launch vehicle stage apogee, the nominal impact point of an intermediate or final stage of a sub-orbital launch vehicle.

Instantaneous impact point (IIP) means an impact point, following thrust termination of a launch vehicle, calculated in the absence of atmospheric drag effects, that is, a vacuum. This shows the point at which launch vehicle debris would land in the event thrust was terminated. In this proposal, the IIP calculations would assume a vacuum.

Instantaneous impact point (IIP) range rate means a launch vehicle's estimated IIP velocity along the Earth's surface. It is typically abbreviated as $\dot{R}$, or R-dot.

Intraline distance means the minimum distance permitted between any two explosive hazard facilities in the ownership, possession or control of one launch site customer. lntraline distance prevents the propagation of an explosion. In other words, with an appropriate intraline distance, an explosive mishap at one explosive hazard facility would not cause an explosive event at another explosive hazard facility. The FAA anticipates that worker safety requirements will dictate protection of employees and anticipates that all licensees will familiarize themselves with those requirements and conform to them in accordance with the law. Unlike distances used to protect the public, intraline distance will not protect workers with the same level of protection as the public. NASA defines intraline distance as "(t)he distance to be maintained between any two operating buildings and sites within an operating line, of which at least one contains or is designed to contain explosives, . . .".[16] Thus, for NASA, the criteria for using intraline distance is whether the areas are within an operating line. An operating line is a "group of buildings used to perform the consecutive steps in the loading, assembling, modification, normal maintenance, renovation, or salvaging of an item or in the manufacture of an explosive or explosive device." [17] The FAA's proposed definition is more suitable to its statutory obligation to protect public safety because public safety dictates only that explosive hazard facilities of one launch operator be sited in a manner to prevent the propagation of an explosion. If intraline distances are not maintained between two explosive hazard facilities, then the larger area encompassing both quantities must be used for Q-D purposes when determining prescribed distances to the public.

Launch area means, for a flight corridor defined using appendix A, the portion of a flight corridor from the launch point to a point 100 nm in the direction of the flight azimuth. For a flight corridor defined using appendix B. a launch site is the portion of a flight corridor from the launch point to the enveloping line enclosing the outer boundary of the last D_i dispersion circle.

Launch point means a point on the earth from which the flight of a launch vehicle begins, and is defined by the point's geodetic latitude, longitude and height on an ellipsoidal Earth model.

Launch site accident means an unplanned event occurring during a ground activity at a launch site resulting in a fatality or serious injury (as defined in 49 CFR 830.2) to any person who is not associated with the activity, or any damage estimated to exceed $25,000 to property not associated with the activity. The FAA considers any licensee or its employees, or any licensee customer, contractor, or subcontractor or the employees of any of these persons to be associated with a ground activity. Property not associated with the activity will typically include any property belonging to members of the public or personal property of employees. Property associated with the activity includes the property of a launch site operator or launch licensee, or either licensee's customers, contractors or subcontractors.

Net explosive weight (NEW) means the total weight, expressed in pounds, of explosive material or explosive equivalency contained in an item. This term is used for applying Q-D criteria to solid propellants, and for liquid propellants when explosive equivalency applies. Explosive equivalency applies to liquid propellants when a liquid fuel and a liquid oxidizer are close enough together that their explosive potential combined must be used when determining prescribed distances to the public.

Nominal means, in reference to launch vehicle performance, trajectory, or stage impact point, a launch vehicle flight where all launch vehicle aerodynamic parameters are as expected, all vehicle internal and external systems perform exactly as planned, and there are no external perturbing influences (e.g.. winds) other than atmospheric drag and gravity.

Nominal trajectory means the position and velocity components of a nominally

[14] DOD Standard at A-4

[15] DOD Standard at A-7; NASA Standard at A-9.

[16] NASA Standard at A-7.

[17] NASA Standard at A-8.

performing launch vehicle relative to an x,y,z. coordinate system, expressed in $x,y,z,\dot{x},\dot{y},\dot{z}$. The x,y,z coordinates describe the position of the vehicle both for projecting the proposed flight path and during actual flight. The $\dot{x},\dot{y},\dot{z}$ variables describe the velocity of the vehicle.

Overflight dwell time means the period of time it takes for a launch vehicle's IIP to move past a populated area. For a given populated area, the overflight dwell time is the time period measure along the nominal trajectory IIP ground trace from the time point whose normal with the trajectory intersects the most uprange part of the populated area to the time point whose normal with the trajectory intersects the most downrange part of the populated area.

Overflight exclusion zone means a portion of a flight corridor which must remain clear of the public during the flight of a launch vehicle.

Populated area means a land area with population. For a part 420 site location risk analysis of a populated area within the first 100 nm of a launch point, a populated area is no greater than a census block group in the U.S.. and an equivalent size outside the U.S. For analysis of a part 420 flight corridor more than 100 nm downrange from the launch point, a populated area is no greater than a 1" X 1" latitude/longitude grid, whether in the United States or not.

Population density means the number of people per unit area in a populated area.

Position data means data referring to the current position of a launch vehicle with respect to time using the X, Y, Z coordinate system.

Public area means any area outside an explosive hazard facility and is an area that is not in the possession, ownership or other control of a launch site operator or of a launch site customer who possesses, owns or otherwise controls that explosive hazard facility. For purposes of Q-D criteria, the proposed rules treat any location outside a launch site boundary as a public area for any activity at a launch site. Certain areas within a launch site are also considered public areas for purposes of applying Q–D criteria. With respect to any given launch operator, areas where other launch operators are located. or where the launch site operator Commission is located. are public areas.

Public area distance means the minimum separation distance permitted between a public area and an explosive hazard facility. Although NASA and DoD differentiate between areas that contain inhabited buildings and areas that contain public traffic routes. with inhabited buildings requiring greater separation distances. the FAA's proposed requirements does not make the same differentiation.'* The FAA proposes to use NASA's and DoD's more conservative inhabited building distance as the required distance between an explosive hazard facility and all public areas. This is because a public area is not in the control of the applicant, and can, therefore, contain anything from open land to groups of office buildings. This is consistent with the approach taken by NASA and DoD for areas outside a launch site. For example, NASA defines inhabited building distance as "(t)he minimum allowable distance between an inhabited building and an explosive area. Inhabited building distances are used between explosives areas and administrative areas, also between operating lines with dissimilar hazards and between explosive locations and other exposures. Inhabited building distances will also be provided between explosive areas and Center boundaries."[19]

Unguided sub-orbital launch vehicle means a sub-orbital rocket that does not have a guidance system.

X, Y,Z coordinate system means an orthogonal, Earth-fixed, topocentric. right-handed system. The origin of the coordinate system is at a launch point. The X-axis coincides with the initial launch azimuth and is positive in the downrange direction. The Y-axis is positive to the left looking downrange. The XY-plane is tangent to the ellipsoidal earth model's surface at the origin and perpendicular to the geodetic vertical. The Z-axis is normal to the XY-plane and positive directed away from the earth.

$\phi_0, \lambda_0, \lambda_0$ means a latitude, longitude, height system where ϕ_0 is the geodetic latitude of a launch point, λ_0 is the east longitude of the launch point, and h is the height of the launch point above a reference ellipsoid. ϕ_0 and λ_0 are expressed in degrees decimal degrees, which is abbreviated as DDD.

Proposed subpart I3 would contain the criteria and information requirements for obtaining a license to operate a launch site. Section 420.15 would specify the information that an applicant for a launch site license would have to submit as part of its license application. The FAA requires this information to evaluate environmental impacts, whether the launch site location could safely be used to conduct launches, issues affecting national security and foreign policy, explosive site safety, and whether the applicant will operate safely.

Proposed § 420.15(a) contains the environmental review requirements currently located at § 4 17.105-107.

Proposed § 420.15(b) would provide the information necessary for a location review. It would also require foreign ownership information and an explosive site plan.

Proposed § 420.15(c) requires an applicant to demonstrate how it will satisfy its subpart D responsibilities. Specifically. a license applicant must show how the applicant proposes to control public access pursuant to § 420.53, how it proposes to comply with the scheduling requirements of § 420.55, and how it proposes to satisfy the notification obligations of § 420.57. The FAA requires this information to ascertain whether an applicant will be able to satisfy the subpart D performance requirements and for compliance monitoring purposes. With regard to the notification obligations of § 420.57, an applicant must submit its agreements with the US. Coast Guard district and the FAA regional office for air traffic services to demonstrate satisfaction of the requirements of § 420.57(b) and (c). A license applicant must also show how it proposes to comply with the accident investigation requirements in § 420.59 and requirements on explosives in § 420.63.

Proposed § 420.15(d) provides that an applicant who is proposing to locate a launch site at an existing launch point at a federal launch range is not required to perform a location review if a launch vehicle of the same type and class as proposed for the launch point has been safely launched from the launch point. An applicant who is proposing to locate at a federal launch range is not required to submit an explosive site plan.

Section 420.17 would establish the bases upon which the FAA will make its license determination. This includes the FAA's determination of the adequacy of information provided by the applicant, the conclusions of the environmental and policy reviews, the adequacy of the explosive site plan, and satisfaction of site location requirements. The FAA will notify the applicant of, and allow the applicant to address, any deficiencies in the application.

Section 420.19 would require an applicant to demonstrate that its proposed launch site location will allow for the safe launch of at least one type of launch vehicle by defining flight corridors or impact dispersion areas and estimating casualty expectancy.

[18] Nor does the FAA attempt to protect inhahited buildings that arc not considered property of the public.

"NASA Standard at A-7.

Section 420.21 would require an applicant to specify which launch vehicle type and class would be launched from each launch point at the proposed launch site. This section also proposes to define the minimum distance from each launch point to a launch site boundary.[20] The three types of expendable launch vehicle proposed account for the critical distinctions between launch vehicles designed for orbital or sub-orbital flight, and between those with and without guidance systems. Guided orbital expendable launch vehicles typically require an FTS. which means that the greatest risk to the public stems from debris caused by destruction of a vehicle. Guided sub-orbital launch vehicles will be treated similarly to orbital launch vehicles, except for the nominal impact of the final stage. In contrast, unguided sub-orbital launch vehicles generally have high reliability levels, and therefore crate the greatest public risk through nominal stage impact. The methods proposed in the appendices are designed to account for these differences in public risk. Orbital expendable launch vehicles are also sorted by class, which is determined by payload weight capacity. Minimum distances are based on actual computations for each of the launch vehicle types and classes. The safety of launch points for reusable launch vehicles will be evaluated on a case-by-case basis in a manner consistent with the principles expressed here.

Section 420.23 would state that the FAA will evaluate the adequacy of a launch site location for unproven launch vehicles on a case-by-case basis.

Subpart B also contains the FAA's proposed explosive facility siting standards for the protection of the public from launch site explosive hazards created by liquid and solid propellants. These standards would be used by an applicant to site facilities that support activities involving liquid and solid propellants, or facilities potentially exposed to such activities, and to document the layout of these facilities.[21]

In order to comply with proposed subpart B, an applicant would first determine those areas at its proposed launch site where solid or liquid propellant would be stored or handled. and which the FAA proposes to designate as explosive hazard facilities. They may include payload processing facilities, launch pads, propellant storage or transfer tanks, and solid rocket motor assembly buildings. An applicant must then determine the types and maximum quantity of propellants to be located at each explosive hazard facility. For solid propellants, the applicant would determine the total weight, expressed in pounds, of division 1.3 explosive material to be contained in the items that will be located at each explosive hazard facility. For liquid propellants, the applicant would determine either the explosive equivalency of a fuel and oxidizer combination if fuels and oxidizers would be located together at, what is referred to as, incompatible distances: or, if fuels and oxidizers would not be located together, an applicant would determine the net weight in pounds of liquid propellant in each explosive hazard facility.

The next step for an applicant would be to determine the minimum allowable separation distance between each explosive hazard facility and all other explosive hazard facilities, the launch site boundary, and other public areas such as the launch complex of another launch operator, public railways and highways running through the launch site, and any visitor centers. The distances between explosive hazard facilities are important to ensure that an explosive event in one explosive hazard facility would not cause an explosive event in another explosive hazard facility. The distances between explosive hazard facilities and public areas are important to ensure that the public is protected from blast, debris. and thermal hazards. Exact distances must be given between the wall or corner of the facility closest to the closest wall or corner of other explosive hazard facilities and public areas. Minimum allowable distances based on the type and quantity of propellant to be located within an explosive hazard facility. Determining the minimum allowable distance between two explosive hazard facilities is accomplished by applying the applicable criteria to each and then separating them by at least the greater distance prescribed for each explosive hazard facility. For example, if a certain amount of division 1.3 solid propellant would be located at explosive hazard facility A, and twice as much division 1.3 solid propellant would be located at explosive hazard facility B, the prescribed distance generated by explosive hazard facility B would serve as the minimum distance permitted between explosive hazard facility A and explosive hazard facility B.

Proposed § 420.31 (a) would require an applicant to provide the FAA an explosive site plan that establishes that the applicant's proposed distances satisfy the explosive siting criteria. The explosive site plan must include a scaled map or maps that show the location of all proposed explosive hazard facilities where solid and liquid propellants would be stored or handled.** An applicant must include the class and division for each solid propellant and the hazard and compatibility group for each liquid propellant.

In addition to the location of explosive hazard facilities, the map or maps would indicate actual and minimum allowable distances between each explosive hazard facility and other explosive hazard facilities and each public area, including the launch site boundary. One means by which an applicant could show that the distances are at least the minimum required in the proposed rules would be by drawing a circle or arc with a radius equal to the minimum allowed distance centered on each explosive hazard facility.

Unlike the DOD and NASA standards, which both define numerous separation distances, the proposed rules define only two distances for solid propellants, namely, a public area distance and an intraline distance. Public area distance would serve as the minimum distance permitted between a public area and an explosive hazard facility. Facilities and other infrastructure such as roads, railways, and inhabited buildings may or may not be public areas, depending on whether the public has access at the time explosives are present in the explosive hazard facility. Examples include a public road or railroad running through a launch site, and a visitor center where members of the public would be located.[23] Likewise,

[20] The FAA also proposed minimum distances between a launch point and a launch site boundary in its explosive site plan requirements in subpart B. Because both requirements apply. an applicant must apply the greater of the D_{max} or Q-D distance to accommodate the greater of the hazards.

[21] An analysis may include evaluations of blast hazards: fragment hazards: protective construction: grounding. bounding and lighting protection systems: electrical installations: natural or man-made terrain features: or other mission or local requirements

[22] Areas where solid propellants would be stored would be included in the plan even though ATF requirements apply Applicants with magazines where solid propellants are to he stored must obtain an ATF permit and meet ATF quantity-distance requirements. The FAA will use the information to ensure that those of its requirements unrelated to storage are satisfied and to coordinate with ATF when necessary.

[23] A launch site operator who does not wish to employ the appropriate public area distance between an explosive hazard facility and public areas such as, for example, a visitor center, must propose operational limitations in its application. These would consist of such strictures as not allowing members of the public in the visitor center while explosives are present in the explosive

Continued

different launch site customers are also considered the public with respect to each other. Intraline distance would provide the minimum distance permitted between any two explosive hazard facilities used by one launch site customer. In this regard, for planning purposes, an applicant should bear in mind that using the greater public area distance would avoid later operational constraints when different customers wanted to use facilities sited at intraline distances.

In addition to containing maps, an explosive site plan would also describe, through tables or lists, the maximum quantities of liquid and solid propellants to be located at each explosive hazard facility, and the activities to be conducted within each explosive hazard facility.

Pursuant to proposed § 420.3 1 (b), the requirement to submit an explosive site plan to the FAA would not apply to an applicant applying for a license to operate a launch site at a federal launch range. Federal launch ranges have separate rules which are either identical or similar to the rules proposed, or require mitigation measures which othenvise ensure safety.

The criteria for determining the minimum required distances between each explosive hazard facility and all other explosive hazard facilities and each public area, including the launch site boundary, are proposed in § 420.33 for solid propellants and § 420.35 for liquid propellants. Proposed § 420.37 includes rules for when liquid and solid propellants are located together.

Proposed § 420.33 covers quantity determinations and minimum required distances for explosive hazard facilities where solid propellants would be handled. Under proposed § 420.33(a). an applicant would first determine the maximum total quantity of explosive in each explosive hazard facility where solid propellants would be handled. The total quantity of explosives in an explosive hazard facility shall be the maximum total weight, expressed in pounds, of division 1.3 explosive material in the contents of the explosive hazard facility. For example, if a facility could hold up to ten solid rocket motors of a particular type, even though it might only rarely hold that many motors, the applicant would calculate the total weight of division 1.3 explosive material in the ten motors.

The proposed rules are based on an assumption that only division 1.3 solid propellant will be located at a launch site in sufficient quantities to affect facility location. The FAA is aware that the launch vehicle used for the first launch from Kodiak Launch Complex, a launch site operated by the recently licensed Alaska Aerospace Development Corporation (AADC), had a second stage motor with division 1.1 propellant. The FAA believes this will be a rare occurrence in the future. The FAA realizes that 1.1 explosives, such as those used in launch operator's flight termination system, will also likely be located at a launch site. However, current practice is to design such components so as not to be able to initiate division 1.3 components when installed on a vehicle. The FAA anticipates that it will require any licensed launch operator to demonstrate that its 1.1 devices do not initiate 1.3 components as is the current practice at federal launch ranges. Therefore, the amount of such ordnance used with division 1.3 explosives may be disregarded for Q-D purposes. The total quantity of explosives shall be the NEW of the division 1.3 components.

Once an applicant has determined the total quantity of solid propellants in each explosive hazard facility, proposed § 420.33(b) would require an applicant to separate each explosive hazard facility where solid propellants will be handled from all other explosive hazard facilities and each public area, including the launch site boundary, in accordance with the minimum separation distances contained in proposed table E-l in appendix E. Table E-l provides two distances for each quantity level. The first, a public area distance, is the minimum distance permitted between a public area and an explosive hazard facility. The second, an intraline distance, is the minimum distance permitted between any two explosive hazard facilities used by one launch site customer. Other explosive hazard facilities may constitute public areas, because the definition of public area includes any area in the possession or ownership, or otherwise under the control of a launch site operator's other customers. Distance calculations would be made accordingly. Table E-l contains the same distances as the NASA and DOD standards, except that the DOD standard has more increments, An applicant may use linear interpolation for quantity values between those provided in the table. Additionally, because table E-l does not include quantities greater than 1 ,000,000 pounds, an applicant with an explosive hazard facility where solid propellants in quantities greater than 1 ,000,000 pounds would be handled would use the equations proposed in § 420.33(b) to obtain separation distances.

An applicant would measure a separation distance from the closest source of debris or hazard under proposed § 420.33(c). For example, for a building, an applicant would use for measurement the wall or corner of the facility closet to the closest wall or corner of other explosive hazard facilities and public areas. When solid rocket motors or motor segments are freestanding, an applicant would measure from the closest motor or motor segment. An acceptable way to demonstrate that minimum distance requirements are met is to draw a circle or arc centered on the closest source of debris or hazard showing that no other explosive hazard facility or public area is within the distance permitted.

Note that Q-D requirements address siting of facilities, not operational control of hazard areas. During actual operations, the existence and size of a hazard area is dependent on the actual amount of explosive material in an explosive hazard facility.

Proposed § 420.35 covers quantity determinations and distance requirements for explosive hazard facilities that support the storage or handling of liquid propellants. In addition to applying to distances between an explosive hazard facility and other explosive hazard facilities and public areas, distance requirements may apply within an explosive hazard facility as well.

Liquid propellants are classified and separated differently than solid propellants. Where solid propellants are classified by class and division, each liquid propellant is assigned to one of three hazard groups and one of two compatibility groups. A hazard group categorizes liquid propellants according to the hazards they cause. Hazard group 1 represents a fire hazard, hazard group 2 represents a more serious fire hazard, and, because a liquid propellant in hazard group 3 can rupture a storage container, it represents a fragmentation hazard. Each liquid propellant also falls into one of two compatibility groups, Liquid propellants are compatible when storing them together does not increase the probability of an accident or, for a given quantity of propellant, the magnitude of the effects of such an accident. Propellants in the same compatibility group do not increase the probability or magnitude of an accident. The two proposed compatibility groups consist of fuels and oxidizers, and are what the NASA and DOD standards label A and C. The FAA proposes to use the same labeling to provide continuity. Proposed group A represents oxidizers

hazard facility not sited according to the proposed requirements

such as LO2 and N204, and proposed group C represents fuels such as RP-1 and LH2. Proposed appendix E provides the hazard and compatibility groups for current launch vehicle liquid propellants in table E-3.

Explosive equivalency serves as another source of difference between the treatment of solid and liquid propellants. Only if fuels and oxidizers are to be located within certain distances of each other would the separation requirements designed to account for the hazardous consequences of their potential combination apply. That combination is measured in terms of explosive equivalency. Explosive equivalency for liquid propellants is a measure of the blast effects from explosion of a given quantity of fuel and oxidizer mixture expressed in terms of the weight of TNT that would produce the same blast effects when detonated. Fuels should not be located near oxidizers if possible. The significance of the hazard groups and compatibility groups is that if fuels are located far enough from oxidizers, the minimum distance requirements to public areas and other explosive hazard facilities depend only on the quantity and hazard group of the individual liquid propellants. If operational requirements require fuels and oxidizers to be located near each other, that is, at less than the minimum public area and incompatible distances proposed in tables E-4, E-5 and E-6, the explosive equivalency of the incompatible propellants must be calculated and used to determine the distances proposed in table E-7 to other explosive hazard facilities and public areas.

Appendix E contains four distance tables with separation requirements for liquid propellants. Tables E-4, E-5 and E-6 contain separation distances for hazard group 1, 2. and 3. respectively. Table E-7 contains separation distances for when fuels and oxidizers are located less than prescribed distances apart so that explosive equivalency applies. Table E-7 contains distances similar to those for 1.1 solid explosives. This is because the "explosive equivalency" of a fuel and oxidizer mixture is measured in terms of its equivalent explosive blast effect to TNT, which is a class 1.1 explosive. Table E-7 also prescribes public area and intraline distances.

Tables E-4, E-5, and E-6 have two distances listed for each quantity of liquid propellant by hazard group. The first. a "public area and incompatible" distance, is the minimum distance permitted between a given quantity of liquid propellant and a public area. The distance is also the same distance by which incompatible propellants must be separated (e.g. the minimum distance between a fuel and an oxidizer) for explosive equivalency and Table E-7 not to apply to the distance calculations. The second, an "intragroup and compatible" distance, is the distance by which propellants in the same hazard group, or propellants in the same compatibility group must be separated (e.g. the minimum distance between two fuels) to avoid adding the quantity of each propellant container being separated in calculating distances. This is simply because if two propellant tanks are far enough apart, they cannot react with one another, even were a mishap to occur. This introduces the third difference between liquid propellant separation requirements and the requirements for solid propellants.

The third area where liquid propellant separation requirements are different than those for solid propellants may be found in calculations of the quantity of liquid propellant that determines the distance relationship with other explosive hazard facilities and public areas. Quantity calculations may depend on distance. As an example, suppose one was determining the minimum distance required between a tank farm having many containers of fuel, and a launch site boundary. If the containers were all close together the applicant would simply take the total amount of fuel, look up the "public area and incompatible" distance in the table that corresponded to the hazard group of the fuel, and ensure that the distance between the closest wall or corner of the explosive hazard facility and the launch site boundary was at least the distance listed in the table. However, if the containers were separated from each other so that the distance between each container met the minimum "intragroup and compatible" [24] distance in the table, the total quantity of propellant to be used for the "public area" distance determination is only the quantity in each container. Therefore, as discussed below, although quantity determination requirements may be found in proposed § 420.35(a) and proposed § 420.35(b) contains distance determination requirements, quantity determinations for liquid propellants may depend on distances between containers.

Like the procedure for solid propellant quantity and distance determinations, an applicant's first step in siting liquid propellants would be to determine the quantity of liquid propellant or, if applicable, the explosive equivalent of the liquid propellant to be located in each explosive hazard facility. An applicant determines this through three steps specified in proposed § 420.35(a). First, proposed § 420.35(a)(1) states that the quantity of propellant in a tank, drum, cylinder, or other container is the net weight in pounds of the propellant in that container. The weight of liquid propellant in associated piping must be included in the determination of quantity to any point where positive means, such as shutoff valves, are provided for interrupting the flow through the pipe, or for interrupting a reaction in the pipe in the event of a mishap.

Next, proposed § 420.35(a)(2) applies when two or more containers of compatible propellants are stored together in an explosive hazard facility. When liquid propellants are compatible, the quantity of propellant used to determine the minimum separation distance between the explosive hazard facility and other explosive hazard facilities and public areas shall be the total quantity of liquid propellant in all containers unless either the containers are separated one from the other by the "intragroup and compatible" distance contained in appendix E, table E-4, E–5 or E-6, depending on the hazard group, or the containers are subdivided by intervening barriers to prevent their mixing. In those two cases, the quantity of propellant in the explosive hazard facility requiring the greatest separation distance must be used to determine the minimum separation distance between the explosive hazard facility and all other explosive hazard facilities and public areas.

Finally, proposed § 420.35(a)(3) applies to quantity determinations when two or more containers of incompatible liquid propellants are stored together in an explosive hazard facility. If each container is not separated from every other container by the "public area and incompatible" distances identified in appendix E, tables E-4, E-5 and E-6, an applicant must determine the total quantity of explosives by calculating the explosive equivalent in pounds of the combined liquids, using NASA formulas contained in table E-2, to determine the minimum separation distance between the explosive hazard facility and other explosive hazard facilities and public areas. If the containers are, in fact, to be separated one from the other by the appropriate "incompatible" distance, an applicant would determine the minimum separation distance to another explosive hazard facility or public area using the quantity of propellant within the explosive hazard facility requiring the greatest separation distance. For

[24] The category is called "intragroup and compatible" to cover propellants that are in different hazard groups but arc still compatible.

example, if 50 pounds of hazard group 1 fuel were 31 feet from 150 pounds of hazard group 1 fuel, the minimum required distance to a public area would be 35 feet, reflecting the public area distance required by the greater quantity of fuel.

Proposed § 420.35(a) (4) requires an applicant to convert liquid propellant quantities from gallons to pounds using conversion factors in table E-3, and the equation provided. The proposed requirement reflects a NASA standard.[25]

After an applicant has determined the quantity of liquid propellant or, if applicable, the explosive equivalent of the liquid propellants to be located in each explosive hazard facility, an applicant must then determine the separation distances between each explosive hazard facility and public areas. Proposed § 420.35(b) specifies the rules by which an applicant determines the separation distances between propellants within explosive hazard facilities, and between explosive hazard facilities and public areas. An applicant would first use table E-3 to determine hazard and compatibility groups. An applicant would then separate propellants from each other and from each public area using at least the distances provided in tables E-4 through E-7. With one exception, as discussed below, tables E-l and E-7 reflect the NASA standard.

Proposed § 420.35(b) (1) would require that an applicant measure minimum separation distances from the container, building. or positive cutoff point in piping which is closet to each public area or explosive hazard facility requiring separation.

Proposed § 420.35(b) (2) would impose a minimum separation distance between compatible propellants. An applicant would measure the separation distance between compatible propellants using the "intragroup and compatible" distance for the propellant quantity and group that requires the greater distance prescribed in tables E-4, E-5, and E-6. The distance between any two propellants is computed by first determining what the minimum required distances is for each propellant based on the quantity and hazard group of that propellant. The one requiring the greater distance is controlling for the pair.

Proposed § 420.35(b) (3) would apply to the-minimum separation distance between incompatible propellants. An applicant would have to measure the separation distance between propellants of different compatibility groups using the "public area and incompatible" distance from the propellant quantity and group that requires the greater distance prescribed by tables E-4, E-5, and E-6, unless the propellants of different compatibility groups are subdivided by intervening barriers to prevent their mixing. If intervening barriers are to be present, the minimum separation distance shall then be the "intragroup and compatible" distance for the propellant quantity and group that requires the greater distance prescribed b tables E-4, E-5, and E-6.

Proposed 4 420.35(b) (4) would apply to the separation of liquid propellants from public areas. An applicant shall separate these propellants from public areas using no less than the "public area" distance prescribed by tables E-4, E-5, and E-6.

Proposed § 420.35(b) (5) would apply to propellants where explosive equivalents apply prescribed by subparagraph (a) (3). An applicant shall separate each explosive hazard facility that will contain propellants where explosive equivalents apply from all other explosive hazard facilities that are under the control of the same customer public areas is the public area distance in table E-7. Table E-7 is a revised form of the NASA standard.

Proposed § 420.37 would specify the rules to be used when solid and liquid propellants are located together, such as at launch pads and test stands. For applicants proposing an explosive hazard facility where solid and liquid propellants are to be located together, § 420.37 provides three steps that an applicant should use to determine the minimum separation distances between the explosive hazard facility and other explosive hazard facilities and public areas. An applicant would first determine the minimum separation distances between the explosive hazard facility and other explosive hazard facilities and public areas required for the solid propellants alone, in accordance with proposed § 420.33. An applicant would then determine the minimum separation distances between the explosive hazard facility and other explosive hazard facilities and public areas required for the liquid propellants alone, in accordance with § 420.35. If explosive equivalents apply, an applicant would determine the minimum separation distances between the explosive hazard facility and other explosive hazard facilities and public areas required for the liquid propellants using appendix E, table E-7F. in accordance with § 420.35. An applicant would then apply the greater of the distances determined by the liquid propellant alone or the solid propellant alone.

Subpart C contains license term and conditions. Section 420.41 would specify the authority granted to a launch site operator by a license and the licensee's obligation to comply with representations contained in the license application as well as the FAA's license terms and conditions. The provision limits a licensee's authority to the launch points on the launch site and to the types of launch vehicles used to demonstrate the safety of the launch site location, and, for orbital launch vehicles, to vehicles no larger than the class analyzed. The provision would also clarify the licensee's obligation to comply with any other laws or regulations applicable to its licensed activities and identifies certain rights that are not conveyed by a launch site operator license.

Section 420.43 would specify the duration of a license to operate a launch site, the grounds for shortening the term, and that a license may be renewed.

Section 420.45 would provide the procedures that an applicant must follow to obtain FAA approval for the transfer of an existing license to operate a launch site.

Section 420.47 would specify the procedures that the FAA would allow to modify a license through a license order or written approval, and the procedures that a launch site operator licensee must follow to obtain an FAA license modification. A licensee must obtain a license modification if the licensee proposes to operate the launch site in a manner not authorized by its license. This means, among other things, that if a representation in the license application regarding an issue material to public safety is no longer accurate or does not describe the licensee's operation or intended operation of the site, a licensee must obtain a license modification. This is because the representations a licensee makes in its application become part of the terms and conditions of its license.

A licensee must obtain FAA approval prior to modifying its operations. For example, a licensee whose application stated that it would prevent unauthorized access to its launch site through the use of security personnel might decide, in the course of its operation, that physical barriers might better serve to accomplish this goal. The FAA considered that, on the one hand, the ability to immediately institute a change might best control public access because if a licensee has to wait for its license to be modified prior to instituting a change, needed safety improvements might be unnecessarily delayed. On the other hand, the FAA's

[25] N.AS.4 Standard at 7-7

mandate requires that it first ascertain whether the proposed change is indeed acceptable. Accordingly, the FAA decided that it must first be advised of a proposed change and must approve its implementation. In the event of special circumstances and where safety warrants, the FAA will work with a licensee to accommodate any timing problems.

Proposed § 420.47 also specifies the procedures for a licensee to obtain and the FAA to issue a license modification. The FAA could modify a license using a written approval rather than a license order in cases where the change addresses an activity or condition that was represented in the license application but not spelled out in a license order.

Section 420.49 would impose an obligation on a launch site operator licensee, its customers, and its contractors to cooperate with the FAA in compliance monitoring of licensed activities. This requirement recognizes an FAA compliance monitor's need to observe operations conducted by all parties at the site and to have access to records and personnel if the FAA is to be assured that public safety is being protected.

Subpart D contains the responsibilities of a licensee. Section 420.5 1 would describe a licensee's obligation to operate its launch site in accordance with the representations in its license application, 49 U.S.C. Subtitle IX. ch. 701 and the FAA's regulations.

Section 420.53 would require a launch site operator licensee to control public access to the launch site and to protect the public present at the launch site. The proposed regulation seeks to protect the public from the consequences of flight and pre-flight activities by separating the public from hazardous launch procedures. The public could also be at risk if allowed to enter the launch site or move about without adequate safeguards. This provision would require the licensee to prevent the public from gaining unauthorized access to the launch site. The applicant would be given broad discretion in selecting the method for controlling access. The provision would also hold the licensee responsible for informing members of the public of safety precautions before entry and for warning of emergencies on-site. A licensee would also be responsible for escorting the public between harzard areas not otherwise controlled by a launch operator at the launch site, and employing warning signals or alarms to notify persons on the launch site of any emergency.

Section 420.55 would require a licensee to develop and implement procedures to coordinate operations carried out by launch site customers. including launch operators, and their contractors. This requirement is necessary to ensure that the operations of one launch site customer do not interact with the operations of another customer to create a public safety hazard at the launch site or beyond. For example, the testing of equipment using radio frequency transmissions could trigger ordnance used by someone elsewhere on the site, if the two launch preparation activities are not coordinated or warnings issued. Likewise, hazardous operations by one customer with the potential to reach another customer must be coordinated by the launch site operator. A launch site licensee would be required to ensure that all customers at the site are informed of procedures and adhere to scheduling requirements before commencing operations at the launch site.

Section 420.57 would establish notification requirements for a licensee. The licensee would be responsible for notifying customers of any limitations on use of the site. This provision would ensure that customer activities re compatible with other activities at the launch site. It would also ensure that limitations on the use of facilities provided to customers by a launch site operator are communicated to the customer. The licensee will be responsible for possessing agreements with the Coast Guard to arrange for issuance of Notices to Mariners during launches and with the regional FAA office for Notice to Airmen and closure of air routes. In addition, the licensee will notify local officials and landowners adjacent to the launch site of the flight schedule. This provision places an on-going responsibility on the site operator licensee for establishing notification procedures, rather than on the numerous launch licensees whose involvement with the launch site may be more sporadic and temporary. The proposed requirement would, however. leave open the option of a launch licensee implementing the procedures established by the launch site operator.

Section 420.59 would require a licensee to development and implement a launch site accident investigation plan containing procedures for reporting, investigating and responding to a launch site accident. The provision would extend reporting, investigation and response procedures currently applicable to launch related accidents and incidents to accidents occurring during round activities at a launch site. The proposed rule allows launch site operators to satisfy the requirements of § 420.59 by using accident investigation procedures developed in accordance with the requirements of the US. Occupational Safety and Health Administration (OSHA) at 29 CFR 1910.119 and 120, and the U.S. Environmental Protection Agency (EPA) at 40 CFR part 68, to the extent that the procedures include the elements provided § 420.59.[26] The FAA wishes to ease the regulatory burden here and in other parts of the proposed rules where other federal regulatory agencies impose requirements on launch site operators.

OSHA's standard at 29 CFR 1910.119 includes provisions for investigating incidents and emergency response. See 29 CFR 1910.119(m) and (n). In addition, 29 CFR 1910.120, hazardous waste operations and emergency response (HAZWOPER), provides for emergency response planning for operations involving hazardous materials, including those listed by the Department of Transportation under 49 CFR 172.101.[27] Launch operators and launch site operator in compliance with these requirements will be taking steps to protect the public as well as their workers.

EPA's requirements at 40 CFR part 68 also include standards for incident investigation and emergency response. See 40 CFR 68.60, 68.81. 68.90. and 68.180. for both the OSHA and EPA requirements, compliance with 42 U.S.C. 11003, Emergency Planning and Community Right-to-Know, satisfies many of the emergency response provisions.

The FAA is interested in the public's view of proposed § 420.59, particularly the extent to which other regulatory agency requirements such as OSHA and EPA help to ensure launch site operators respond to an investigate launch site accidents.

Section 420.61 would provide the requirements for launch site operator retention or records, data, and other material needed to verify that launch site operator operations are conducted in accordance with representations contained in the licensee, and for recorded production in the event of

[26] The EPA's requirements in 40 CFR part 68 apply to "incidents which resulted in. or could reasonably have resulted in a catastrophic release." 40 CFR 68.60(a). OSHA's requirements in 29 CFR 1910 119 are similar, applying to "each incident which resulted in, or could reasonably have resulted in a catastrophic release of a highly hazardous chemical in the workplace." 29 CFR 1910.119(m)(!).

[27] Hazardous materials in AST regulations. § 401.5, are defined as hazardous materials as defined in 49 CFR 172 101.

launch site accident investigation, or compliance monitoring.

Section 420.63 would provide responsibilities of a launch site operator regarding explosives. Section 420.63(a) would require a launch site operator to ensure that the configuration of the launch site is in accordance with the licensee's explosive site plan, and that its explosive site plan is in compliance with the requirements in §§ 420.31-420.37.

Section 420.63(b) would require a launch site operator to ensure that the public is not exposed to hazards due to the initiation of explosives by lightning. Unless an explosive hazard facility has a lightning warning system to permit termination of operations and withdrawal of the public to public area distance prior to the incidence of an electrical storm, or the explosive hazard facility is to contain explosives that cannot be initiated by lightning, it must have a lightning protection system to ensure explosives are not initiated by lightning. A lightning protection system shall include an air terminal to intentionally attract a lightning strike, a low impedance path-called a down conductor-connecting an air terminal to an earth electrode system, and an earth electrode system to dissipate the current from a lightning strike to ground.

Because no lightning protection system is necessary if a launch site operator has a lightning warning system to permit termination of operations and withdrawal of the public to public area distance prior to the incidence of an electrical storm, proposed § 420.63 does not explicitly protect the public from the inadvertent flight of a solid rocket motor. The FAA is interested in public views on this point.

A lightning protection system shall also include measures for bonding and surge protection. For bonding, all metallic bodies shall be bonded to ensure that voltage potentials due to lightning are equal everywhere in the explosive hazard facility. Fences within six feet of the lightning protection system shall have bonds across gates and other discontinuations and shall be bonded to the lightning protection system. Railroad tracks that run within six feet of the lightning protection system shall be bonded to the lightning protection system. For surge protection, a lightning protection system shall include surge protection for all metallic power, communication, and instrumentation lines coming into an explosive hazard facility to reduce transient voltages due to lightning to a harmless level.

Lightning protection systems shall be visually inspected semiannually and shall be tested once each year for electrical continuity and adequacy of grounding. A record of results obtained from the tests, including action taken to correct deficiencies noted, must be maintained at the explosive hazard facility.

Section 420.63(c) would require a launch site operator to ensure that electric power lines on the launch site meet the distance requirements provided. A full discussion of explosive hazard mitigation measures is provided in the general preamble above.

Appendix A

Of the two methods the FAA proposes for allowing an applicant to demonstrate the existence of a guided launch vehicle flight corridor that satisfies the FAA's risk criteria, appendix A typically offers the more conservative approach in that it produces a larger area as well as the more simple of the options available for guided orbital and suborbital launch vehicles. In order to achieve the simplicity this approach offers, the FAA based certain decisions regarding the methodology on a series of what it intends as conservative assumptions and on hazard areas previously developed by the federal launch ranges for the guided launch vehicles listed in table 1 of § 420.21.

The greater simplicity of the approach derives from the fact that, unlike the method of appendix B, an applicant need obtain no meteorological data and need not plot the trajectory of a particular launch vehicle. Instead, recognizing that a typical flight corridor consists of a series of fans of decreasing angle extending out from a launch point, the FAA proposes, with certain modifications, to employ a variation on that typical corridor for its proposed appendix A analysis.

The FAA's proposed appendix A flight corridor estimation contains a number of elements, each of which an applicant must define for each of its proposed launch points. An appendix A flight corridor consists of a circular area around a selected launch point, an overflight exclusion zone, a launch area and a downrange area. A flight corridor for a guided orbital launch vehicle ends 5,000 nautical miles from the launch point, and, for a guided suborbital launch vehicle, the flight corridor ends with the impact dispersion area of the launch vehicle's final stage.

Once an applicant has produced an appendix A flight corridor, the applicant must ascertain whether the flight corridor contains population, and, if so, whether the use of the corridor would present unacceptable risk to that population. If so, whether the use of the corridor would present unacceptable risk to that population. If no members of the public reside within the corridor, the FAA would approve the proposed location of the site.[28] If the flight corridor is populated, the FAA proposes to require an applicant to perform a risk analysis as set forth in appendix C. If the proposed corridor satisfies the FAA's risk criteria, the FAA will approve the location of the site. If, however, the proposed corridor fails to satisfy the FAA's risk criteria, an applicant has certain options. The applicant may attempt another appendix A flight corridor by selecting a different flight azimuth or by selecting a different launch point at the proposed launch site, or by selecting a different launch vehicle type or class. Or, the applicant may, using the more accurate but more complicated calculations of appendix B, narrow its flight corridor and determine whether that flight corridor satisfies the FAA's risk criteria.

To create a hypothetical flight corridor under proposed appendix A an applicant must first determine from where on the launch site a guided launch vehicle would take flight. That position is defined as a launch point. An applicant must determine the geodetic latitude and longitude of each launch point that it proposes to offer for launch, and select a flight azimuth for each launch point. An applicant should know whether it plans to offer the site for the launch of guided orbital or sub-orbital launch vehicles. If planning for the launch of guided orbital launch vehicles, the applicant must decide what launch vehicle class, as described by payload weight in proposed § 420.21, table 1, best represents the largest launch vehicle class the launch site would support.

Once an applicant has made the necessary decisions regarding location and vehicle class, the next step in creating an appendix A flight corridor is to look up the maximum distance (D_{max}) that debris is expected to travel from a launch point if a worst-case launch vehicle failure were to occur and flight termination action destroyed the launch vehicle at 10 seconds into flight. D_{max} serves as a radius that defines a circular area around the launch point. The FAA has estimated, on the basis of federal launch range experience, the D_{max} for a guided suborbital launch vehicle and for

[28] An applicant must still obtain written agreements with the FAA regional office having jurisdiction over the airspace where launches will take place and, if appropriate, with the U.S. Coast guard regarding procedures for coordinating launches from the launch site.

each guided orbital launch vehicle class and provided the results that an applicant should employ in table A- 1, appendix A.

The circular area, defined by D_{max}, is part of an overflight exclusion zone. An overflight exclusion zone in an appendix A flight corridor consists of a rectangular area of the length prescribed by table A-2, capped up-range by a semi-circle with radius D_{max}, centered on the launch point. Its downrange boundary is defined by an identical semi-circular arc with a radium D_{max}, centered on the endpoint prescribed by table A-2. The cross-range boundaries consist of two lines parallel to and to either side of the flight azimuth. Each line is tangent to the upgrade and downgrade D_{max}, circles as shown in appendix A, figure A-l.

An appendix A flight corridor also contains a launch area. The launch area extends from the uprange boundary, which is coextensive with the circle created by the radius D_{max}, to a line drawn perpendicular to the flight azimuth one hundred nautical miles down range of the launch point. The launch area's cross-range boundaries are a function of the lengths of two lines perpendicular to the flight azimuth: one drawn ten nautical miles down range from the launch point and the other line drawn one hundred nautical miles down range from the launch point. Table A-3 provides the lengths of the line segments.

Adjacent to the launch area is the downrange area. For purposes of appendix A, a corridor's downrange area extends from the one hundred nautical miles line to a line, perpendicular to the flight azimuth, that is 5.000 nautical miles downrange from the launch point for the guided orbital launch vehicle classes, and to an impact dispersion area for a guided suborbital launch vehicle corridor. The down range area's cross-range boundaries connect the prescribed endpoints of the perpendicular lines at one hundred nautical miles and 5,000 nautical miles. Table A-3 provides the lengths of the line segments.

All applicants must determine whether the public resides within this flight corridor. If no populated areas exist, an applicant may submit its analysis for the FAA's launch site location review. If there is population located within the flight corridor, the applicant must calculate the risk to the public following the criteria provided in appendix C. The expected casualty (E,) result for the flight corridor must not exceed 30×10^{-6} for the applicant to satisfy the proposed location requirements.

Map Requirements and Plotting Methods

To describe a flight corridor and any populated areas within that corridor, an applicant must observe data and methodology requirements for mapping a flight corridor and analyzing populations. These requirements apply to all appendices.

The FAA proposes to require certain geographical data for use in describing flight corridors for each appendix. The geographical data must include the latitude and longitude of each proposed launch point at a launch site, and all populated areas in a flight corridor. The accuracy requirement for the launch area portion of the analyses calls for map scales of no smaller than 1:250,000 inches per inch. The actual map scale will depend on the smallest census block group size in a launch area. The FAA bases its proposed scale requirement on average range rates in the launch area, because range rates have a direct impact on dwell times over populated areas. While in the launch area of a flight corridor, the instantaneous impact point (IIP) ground trace would tend to linger over any populated areas, which increases the E_c for an individual populated area. The map scale required by the FAA is large enough to allow an applicant to determine the dwell time and size for each applicable populated area.

Using a similar approach, the FAA proposes to establish an accuracy requirement for the downrange area of a flight corridor. A map scale may be no smaller than 1:20,000,000 inches per inch. The scale would be smaller than that required for the launch area because the dwell times over downrange populated areas is small and the map scale must only be large enough to allow an applicant to determine the dwell time and the size of each populated area downrange. Maps satisfying these accuracy requirements are readily available. For example, civil aeronautical charts are published and distributed by the U.S. Department of Commerce, National Oceanic and Atmospheric Administration (NOAA), and are also published by the Defense Mapping Agency and distributed by NOAA.

Besides scale, the FAA has proposed requirements for projections, depending on the plotting method used. Proposed appendices A, B, C and D would require an applicant to use cylindrical, conic, and plane map projections. The FAA proposes these map projections for the analyses because they produce only small error with straight line measurements. Maps may be produced using several different map projections depending on the map scale, geographic region being depicted, and the application. A map projection, according to the U.S. Geological Survey,[29] is a device for producing all or part of a round body on a flat sheet. All map projections have inherent distortions. The distortions are virtually unavoidable and are directly, related to the techniques for displaying latitude and longitude lines on a flat surface area. Therefore, many maps are developed for specific applications requiring that some map characteristics be shown more accurately at the expense of others. The flight corridor methods are primarily sensitive to azimuthal direction and geodetic length of the flight corridor line segments. Therefore, it is important to use map projections that preserve scale and direction accuracy. Cylindrical, conic, and plane map projections have been reviewed by the FAA and are most appropriate types for the launch site application analyses.

The regular cylindrical projections consist of meridians, which are equidistant parallel straight lines, crossed at right angles by straight parallel lines of latitude, generally not equidistant. Geometrically, cylindrical projections can be partially developed by unrolling a cylinder which has been wrapped around a globe representing the Earth, with the inside of the cylinder touching at the equator, and on which meridians have been projected from the center of the globe. When the cylinder is wrapped around the globe in a different direction, so that it is no longer tangent along the equator, an oblique or transverse projection results, and neither the meridians nor the parallels will generally be straight lines.

Normal conic projections are distinguished by the use of arcs of concentric circles for parallels of latitude and equally spaced straight radii of those circles for meridians. The angles between the meridians on the map are smaller than the actual differences in longitude. The circular arcs may or may not be equally spaced, depending on the projection. The name "conic" originatd from the fact that the more elementary conic projections may be derived by placing a cone on the top of a globe representing the Earth, the apex or tip in line with the axis of the globe, and the sides of the cone touching or tangent to the globe along a specified "standard" latitude which is true to scale and without distortion.

[29] Map Projections used by the "U.S. Geological Survey," U.S. Geological Survey Bulletin 1532. 1982.

Meridians are drawn on the cone from the apex to the points at which the corresponding meridians on the globe cross the standard parallel. Other parallels are then drawn as arcs centered on the apex in a manner depending on the projection. If the cone is cut along one meridian and unrolled, a conic projection results.

The azimuthal projections are formed onto a plane which is usually tangent to the globe at either pole, the equator, or any intermediate point. These variations are called the polar, equatorial (or meridian or meridional), and oblique (or horizon) aspects, respectively. Some azimuthals are true perspective projections. Azimuthal projections are characterized by the fact that the direction, or azimuth, from the center of the projection to every other point on the map is shown correctly. The simplest forms of the azimuthal projections are the polar aspects, in which all meridians are shown as straight lines radiating at their true angles from the center, while parallels of latitude are circles concentric about the pole. Most azimuthal maps do not have standard parallels or standard meridians. Each map has only one standard point, the center. Thus, the azimuthals are suitable for minimizing distortion in a somewhat circular region such as Antarctica, but not for an era with predominant length in one direction.

Scale requirements, geographic location of the launch site, and plotting method are the main considerations for choosing a map projection. Of these considerations, the plotting method selected for development and depiction of the flight corridor line segments is the most important. Three plotting methods are provided in appendix A.

The "mechanical method" is the least complex, least costly, but also the least accurate of the methods suggested here. Selecting an appropriate map scale and using a map projection that minimizes inherent scale and direction distortions can minimize coordinate plotting errors. The "Lambert-Conformal" conic projection is acceptable because it has characteristics that preserve angles and scales from any point on the map.[30]

The "semi-automated method" provides more accurate techniques for determining the endpoint coordinates of each flight corridor line segment. Errors associated with measuring devices and the mapping medium tend to be the same as those associated with the mechanical method. Engineering judgment and some map errors are reduced through the use of range and bearing equations. These equations also allow the applicant to choose from a wider variety of map projections. The "Mercator" and "Oblique Mercator" are adequate cylindrical projections. "Lambert-Conformal" and "Albers Equal-Area" are adequate conic projections. The ''Lambert Azimuthal Equal-Area" and "Azimuthal Equidistant" are adequate plane projections. An applicant may use other maps in support of its application, but the applicant would be required to demonstrate an equivalent level of accuracy over the required distances, and would have to describe the consequences of any mapping errors associated with the proposed map projection.

Each of these projections possesses a number of attributes, which make some better suited for some parts of the global than others. Typically, most projections preserve scale and direction when measured from a point of tangency or along a standard parallel or meridian. A Mercator projection is cylindrical and conformal, that is, all angles presented correctly , and for small areas, true shape of features is maintained. In a Mercator projection, meridians are equally spaced straight lines and parallels are unequally spaced straight lines, closest near the equator, cutting meridians at right angles. Scale is true along the equator, or along two parallels equidistant from the equator. The Mercator projection may produce great distortion of area in polar regions.

The Oblique Mercator is cylindrical (oblique) and conformal. It contains two meridians, 180" apart, which are straight lines. Other meridians and parallels are complex curves. Scale on the spherical form is true along a chosen central line, a great circle at an oblique angle, or along two straight lines parallel to central line. The scale on the ellipsoidal form is similar, but varies slightly from this pattern. Scale becomes infinite 90" from the central line.

The Lambert Conformal is conic and conformal. Its parallels are unequally spaced arcs of concentric circles, more closely spaced near the center of the map. Meridians are equally spaced radii of the same circles, and consequently cut parallels at right angles. Scale is true along two standard parallels normally, or along just one. A pole in the same hemisphere as standard parallels is a point. The other pole is at infinity.

The Albers Equal-Area is conic. Parallels are unequally spaced arcs of concentric circles, more closely spaced at the north and south edges of the map. Meridians are equally spaced radii of the same circles, cutting parallels at right angles. There is no distortion in scale or shape along two standard parallels normally, or along just one. Poles are arcs of circles.

The Lambert Azimuthal Equal-Area is azimuthal. All meridian in the polar aspect, the central meridian in other aspects, and the equator in the equatorial aspect are straight lines. The outer meridian of the hemisphere in the equatorial aspect, for the sphere, and the parallels in the polar aspect for sphere or ellipsoid are circles. All other meridians and parallels are complex curves. Scale decreases radially as the distance increases from the center, the only point without distortion.

The Azimuthal Equidistant is azimuthal. Distances measured from the center are true. Distances not measured along radii from the center are not correct. The center of projection is the only point without distortion. Directions from the center are true except on some oblique and equatorial ellipsoidal forms. All meridians on the polar aspect, the central meridian on the other aspects, and the equator on the equatorial aspect are straight lines. Parallels on the polar projection are circles spaced at true intervals equidistant for the sphere. The outer meridian of the hemisphere on the equatorial aspect for the sphere is a circle. All other meridians and parallels are complex curves.

All of these map projections, with the exception of the "Lambert-Conformal" conic, preserve scale and direction when measured along a standard parallel or meridian. Because range and bearing computations are relative to a particular ellipsoid of revolution-a geoid, not the projection of the geoid. the computed latitude and longitude placement will be correct for any projection assuming the map datum and the range and bearing datum are the same.

The FAA will not accept straight lines of long distances that result in significant distortions of the flight corridor. Attempting to draw straight lines for distances greater than 7.5 times the map scale on map scales greater than or equal to 1: 1,000,000 will result in unacceptable errors. The distance factor of 7.5 was determined by plotting several hundred trajectory IIP points and finding equi-distant straight line segments that adequately represent the trajectory curve over a 5,000 nm range.

Appendix A provides an applicant with the equations the FAA proposes to require to perform range and bearing computations for the purpose of plotting

[30] The projections suggested below for the semi-automated method are accurate in scale and direction only from a point of tangency or the standard parallels. These limitations would produce additional errors when the using mechanical method

a flight corridor on a map. The range and bearing from a launch point are used to determine the latitude and longitude coordinates of a point on the flight corridor. Range and bearing equations are standard geodesic computations which can be found in most geodesy text books. A geodesic is a curve describing the minimum length between two points on the surface of an ellipsoid such as the WGS-84 ellipsoid discussed below. The range and bearing computations are sometimes referred to as great circle math routines. Sodano's direct geodetic method is proposed here. The algorithm was developed in 1963 by Emanuel M. Sodano for the U.S Army. The computations provide accuracy to less than a foot for ranges up to 6,000 nm and less than 1/100th of a second (0.000002778 degrees) for all azimuth angles.[31]

An applicant may create line segments to describe a flight corridor by using range and bearings from the launch point along various azimuths. Appendix A provides equations to calculate geodetic latitude (+N) and longitude (+E) given the launch point geodetic latitude (+N), longitude (+E), range (nm). and bearing (degrees, positive clockwise from North). The same equations may also be used to calculate an impact dispersion area by substituting a final stage impact point for the launch point. Appendix A also provides equations to calculate the distance of a geodesic between two points.

An alternative to range and bearing computations is to use geographic information system (GIS) software with global mapping data. GIS software is an effective tool for constructing and evaluating a flight corridor, and has the advantage of allowing an applicant to create maps of varying scales in the launch and downrange areas. Commercially available GIS products are acceptable to the FAA for use in Appendices A, B, C and D if they meet the map and plotting method requirements in paragraph (b) of appendix A. An applicant should note, however, that maps of different scales in GIS software may not match each other. For instance, the coastline of Florida on a U.S. map may not match the coastline on a world map. Applicants shall resolve such contradictions by referring to more accurate maps such as NOAA maps.

Once an applicant has selected a map for displaying a flight corridor's launch area, the line segment lengths may be scaled to the chosen map. Map scale units are actual distance units measured along the Earth's surface per unit of map distance. Most map scale units are given in terms of inches per inch (in/in). An applicant converts appendix A flight corridor line segment distances to the map scale distance by dividing the launch area flight corridor line segment length (inches) by the map scale (in/in). If, for example, an applicant selected a map scale of 250,000 in/in and the line segment for the launch area flight corridor was 1677008 inches, the equivalent scaled length of the line segment for constructing an appendix A launch area is (1677008/250,000)=6.7 inches of map distance. An applicant would then plot the line segment on the map for display purposes using the scaled line segment length of 6.7 inches. If an applicant were to choose a map with scale units other than inches per inch, the FAA would require a description of the conversion algorithm to inches per inch and sample computations. Also note that the FAA proposes to accept straight lines for distances less than or equal to 7.5 times the map scale on map scales greater than or equal to 1: 1 ,000,000 inches per inch: or straight lines representing 100 nm or less on map scales less than 1:1,000,000in/in.

Weight Classes for Guided Orbital Launch Vehicles

Proposed appendix A distinguishes between the guided orbital launch vehicles represented in the appendix on the basis of weight class. The FAA does not propose to distinguish among guided suborbital launch vehicles on the basis of weight class for purposes of appendix A. For guided orbital launch vehicles, the FAA proposes to create four separate weight classes. These are used to determine the size of the debris dispersion radius around a launch point, and the size of an Appendix A flight corridor. The FAA selected the four launch vehicle classes based on the size and characteristics of launch vehicles that currently exist in the U.S. commercial inventory and that should approximate any proposed new launch vehicle as well. An applicant planning to support the launch of guided orbital launch vehicles should choose the largest launch vehicle class anticipated for launch from the chosen launch point. This maximizes the area of the flight corridor. Also, selection of the largest class anticipated lessens the possibility of having to obtain a license modification to accommodate a larger customer than an application may have originally encompassed.

The FAA proposes to rely on a 100-nm orbit as the standard for inter-class launch vehicle comparison purposes. It is a standard reference orbit used by launch vehicle manufacturers for descriptive purposes and allows the uniform comparison of launch vehicle throw weight capability. The FAA obtained the payload weights for the 28" and 90" orbital inclinations from the "International Reference Guide to Space Launch Systems," S.J. Isakowitz, 2d Ed. (1995). They represent capabilities from CCAS and VAFB, respectively.

D_{max} Circle

A radius, maximum distance (D_{max}), is employed to define a circular area about a launch point. The circular area indicates the limits for both flight control and explosive containment following a worst-case launch vehicle failure and flight termination system activation at 10 seconds into flight. The worst-case failure represents a failure response, immediately following first motion, which causes the launch vehicle to fly in the up-range direction on a trajectory that maximizes the impact range. The ten second flight time represents a conservative estimate of the earliest elapsed time after launch that a flight safety officer would be able to detect the malfunction, initiate flight termination action, and actuate the flight termination system on the launch vehicle. The radius is the estimate D_{max} from the launch point that inert debris is expected to travel and beyond which the overpressure from explosive debris is not expected to exceed 0.5 pounds per square inch (psi). D_{max} accounts for the public risk posed by the greater of the wind-induced impact distance of a hazardous piece of inert debris, or the sum of the wind-induced impact distance of an explosive piece of debris and the debris 0.5 psi overpressure radius from the explosion. The values for DG_{max} in table A-l appendix A, were derived from guided suborbital launch vehicles and guided orbital launch vehicles of the classes identified in table 1, § 420.21.

Overflight Exclusion Zone

Table A-2 and figure A- 1 define an overflight exclusion zone. Because of the risks the early stages of flight create, the FAA proposes to require an applicant to demonstrate that the public

[31] The F.4.4 developed a software tool to perform the appendix .A calculations for guided orbital launch vehicles. This software tool has been developed in rhe FORTRAN computer language using Microsoft's Fortran Powerstation. All of the assumptions and equations explained here and contained in appendix A are implemented in the program. The applicant must provide the geodetic latitude. longitude. launch azimuth. and D_{max} from table A-1 as input to the program. The software outputs an ASCII text file of geodetic latitude and longitudes that describe the fight corridor boundary. The FORTRAN code listing and example intput/output may be obtained from the FAA.

will not be present in this area during a launch. An overflight exclusion zone is an area in close promimity to a launch point where the mission risk is greater than an E_c of 30x1 0^{-6} if one member of the public is present in the open. The FAA derived the data for table A-Z using high fidelity risk assessment computer models to estimate the E_c for the different vehicle classes in table 1, § 420.21.

Early in the flight phase launch vehicles have large explosive potential, a low IIP range rate, and an historically higher probability of failure relative to the rest of preorbital flight. The relatively simple risk estimation analysis defined in appendix C does not adequately model the true risk during this stage of flight, and does not serve as the basis for determining that the overflight exclusion zone represents an area where the FAA's risk threshold is not satisfied. Instead, the FAA derived the overflight exclusion zone using a high fidelity risk assessment computer program is use by the national ranges. The program is a launch area risk analysis program called DAMP (facility DAMage and Personal injury). DAMP relies on information about a launch vehicle, its trajectory and failure responses, and facilities and populations in the launch area to estimate hit probabilities and casualty expectation. The hazards analyzed by DAMP include impacting inert debris, and blast overpressures and debris projected from impact explosions.

For the purpose of the FAA's site location assessment, the proposed overflight exclusion zone downrange distances (D_{OEZ}) in table A-2 were derived by computing the downrange drag impact point distance for a ballisitic coefficient of 3 lbs/ft² at the first major staging event time for each of the expendable launch vehicle classes in table 1, § 420.2 1. The effective casually area used in the analysis was the average effective casualty area for the period of flight up to the first major staging event time. See table C-3. The DAMP risk assessment results showed that E_c values exceeded 30x10-6 for the time up to the first major staging event for each of the launch vehicle classes in table 1, § 420.21.

Risk assessments were also conducted for the time of flight immediately after the first major staging event. The results showed a significant decrease in the E_c estimates, and those estimates were within the E_c criteria of 30x10-6. The decrease results from a combination of decreasing dwell times and a signficant reduction in the size of an effective casualty area following a major staging event.

The FAA compared the results obtained using the high fidelity risk models to the estimated casualty expectancy calculated using the risk analysis method from appendix C. The results from the appendix C method also show unacceptable risk inside the overflight exclusion zone, as shown in table "3" and "4" below. An appendix A flight corridor was applied to an appendix C risk analysis and the following variables were input as constants for the guided launch vehicle classes:

P_f=0.10
C=643 seconds
R-dot=.91 nm/s (from table C-2)
N_k=0.5 persons

As described in appendix C. when a populated area is split by a trajectory ground trace, each part of the populated area is evaluated separately and the E_c results of each part are summed to estimate the total E_c for the whole populated area. Hence, for this comparison a value of N_k=0.5 was used in each of the OEZ sections so the total E_c after summation would represent the risk for one person. Tables 3 and 4 show that the E_c inside the OEZ does not meet FAA criteria and does meet those criteria outside the OEZ.

TABLE 3.—PRIOR TO FIRST MAJOR STAGING EVENT

Class	X1 (mi)	X2(nm)	Y1(nm)	Y2(nm)	Sigma (nm)	Ac(nm2)	Ak(nm2)	Pi	E_c
Small	0.00	3.70	0.00	1.20	1.62	0.32	6.70	1.71E–04	40.9E–06
Medium	0.00	4.58	0.00	1.53	1.82	0.40	8.98	2.35E–04	52.3E–06
Med-Lrg	0.00	9.67	0.00	1.83	3.56	0.54	12.23	3.25E–04	71.7E–06
Large	0.00	14.76	0.00	2.14	5.31	1.46	34.66	3.95E–04	83.2E–06
		Med-Lrg values for table "3" and "4" were interpolated from the bounding classes.							
		Ac=average value up to first major staging event.							

TABLE 4.—AFTER FIRST MAJOR STAGING EVENT

Class	X1 (mi)	X2 (nm)	Y1 (nm)	Y2 (nm)	Sigma (nm)	Ac (nm2)	Ak (nm2)	Pi	E_c
Small	0.00	3.70	0.00	1.20	1.62	0.0982	6.70	1.71 E–04	12.5E–06
Medium	0.00	4.58	0.00	1.53	1.82	0.0017	8.98	2.35E–04	22.2E–06
Med-Lrg	0.00	9.67	0.00	1.83	3.56	0.0831	12.23	3.25E–04	11 .0E–06
Large	0.00	14.76	0.00	2.14	5.31	0.4682	34.66	3.95E–04	26.7E–06
		Med-Lrg values for tables "3" and "4" were interpolated from the bounding classes.							
		Ac = value after first major staging event.							

The FAA believes that it is efficient to address keeping an overflight exclusion zone clear of the public through a license to operate a launch site so that the licensee better able to address the issue does so. Moreover, although the FAA is willing to license the operation of a launch site from which a limited number or kind of launches may take place, the FAA does not want to license the operation of a launch site from which launch may never occur. The FAA proposes, therefore, to require that an applicant demonstrate either that the overflight exclusion zone is

unpopulated, that there are times when no one is present, or that the public can be excluded from this area during launch. Although a determination of this nature encompasses issues that will be addressed in a launch license, a launch site cannot support safe launches unless overflight of the highest risk area in close proximity to a launch point takes place without the public present. The FAA considered as an alternative permitting a prospective launch site operator to show that it would be able to clear resident population for one launch. For example, a prospective launch site operator might have a potential customer who has made arrangements for evacuation for a single launch. The FAA, however, wants to be assured that an OEZ would be clear for any launch that takes place from that site, and would, accordingly, require that, if the public does reside in an OEZ, or have other means of access to the OEZ. an applicant show that it has made arrangements for their absence during a launch.[32]

An applicant must display an overflight exclusion zone on maps using the requirements described in paragraph (b) of appendix A.

Launch Area

As noted at the beginning of this discussion, the FAA proposes to employ a series of fans as the shape of the foundation of its appendix A flight corridor. The FAA proposes the flight corridor fans to account for the turning capabilities and wind dispersed debris of a guided launch vehicle. The launch area fans have been divided into two regions, of 60 and 30 degrees, representing the malfunction turn capability of the launch vehicle relative to its velocity in the downtown direction. Each region is represented by the estimated maximum turning capability over a ground-range interval. These angles are the FAA's estimates for the maximum angles that the launch vehicle velocity vector may turn within a five second time period. The initial fan area is described by a 60" half angle extending ten nautical miles downrange from a launch point. The ten nautical mile threshold represents the FAA's estimate of where a vehicle's maximum turning rate capability is reduced to approximately 30 degrees due to increasing velocity in the downrange direction. The FAA obtained these estimates on the basis of a Delta II launch vehicle trajectory, and by employing an annualized wind speed within one standard deviation33 and a debris ballistic coefficient of three. The FAA employed a Delta in its analysis because its thrust profile fell between Atlas and Titan and thus provided a representation of the mean performance parameters of launch vehicles at Cape Canaveral Air Station. This data and use of the appendix B methodology corroborated the selection of 60 and 30 degree half angles.

In the early stages of flight, but past the 100 nautical mile range, a guided launch vehicle is capable of malfunction turns up to 30". Therefore, a 30" half angle was used to define the secondary fan area beginning 10 nautical mile downrange and ending 100 nautical mile downrange. Once a launch vehicle has reached the 100 nautical mile downrange point, the increasing velocity in the downrange direction continues to reduce the launch vehicle's ability to maneuver through a large malfunction turn.

The FAA proposes a 100 nautical mile distance as a delimiter between the launch area and the downrange area. From the launch point out to approximately the point where the IIP is 100 nautical miles downrange, most launch vehicles will be subjected to the aerodynamic forces of wind and drag. Once a launch vehicle's IIP has cleared the 100 nm limit, the FAA is willing to assume for purposes of appendix A that most launch vehicles are outside the atmosphere.

Figure 1 in appendix A depicts the launch area of a flight corridor. Figure 1 shows the relative placement of the line segments comprising the launch area of a flight corridor. The left and right sides of the flight corridor are mirror images, with the flight azimuth serving as the line between the two sides. Table A-3 in appendix A tabulates the lengths of the perpendicular line segments comprising the launch area.

[32] The FAA recognizes that this requirement would protect persons within an OEZ during a launch but not their property. For the time being. the F.4.4 would not address risks to the property of the public in an OEZ but leave the matter to be accommodated through private financial arrangements.

[33] The FAA employed the wind speeds from the Global Gridded Upper Air Statistics database for grid point 27.5 North geodetic latitude and 280.0 East longitude The database covers the period 1980 through 1995.

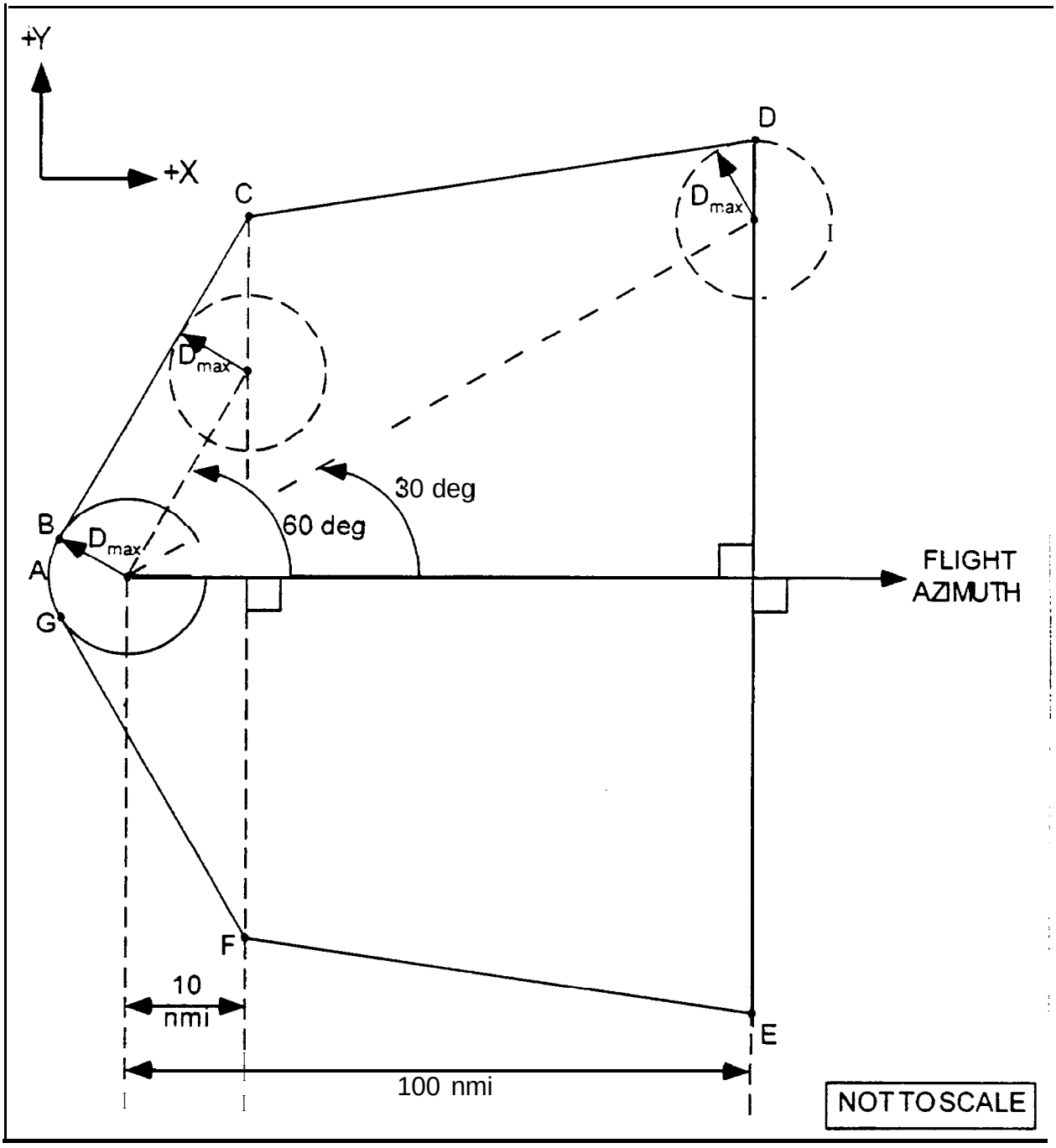

Figure 1
Flight Corridor Launch Area

BILLING CODE 4910-13-C

Downrange Area

The FAA derived the proposed appendix A flight corridor's downrange area from hazard areas previously developed by federal launch ranges for the classes of launch vehicles defined in table 1 of § 420.2 1. The downrange fan area of the flight corridor, as shown in figure 2, is based on turning capabilities and impact dispersions of guided expendable launch vehicles. The size of the fan area is necessary for containing launch vehicle debris in the event that a launch vehicle failure initiates a maximum-rate malfunction turn and the flight termination system must be activated. In the later stages of flight a guided launch vehicle's capability to turn is reduced due to increasing velocities in the downrange direction. Therefore, a 10" half angle was used to define the downrange area, which reflects a combination of normal vehicle dispersions and malfunction turns.

The downrange area of a flight corridor begins 100 nm from a launch point and, for the guided orbital launch vehicle classes, extends 5,000 nm downrange from the launch point. The FAA proposes 5,000 nm as the end of an appendix A flight corridor because overflight dwell times for the remaining flight time result in an insignificant risk to the public. In general, after an orbital launch vehicle IIP has passed the 5,000 nm point its IIP range rates increase very rapidly as the launch vehicle approaches orbital insertion. As a result, the dwell times decrease significantly, reducing the overflight risk to insignificant levels. For an applicant employing a guided suborbital launch vehicle, a flight corridor would end with the impact dispersion area of a final stage.

Figure 2 depicts the downrange area of a flight corridor. The figure depicts the relative placement of the line segments comprising the downrange area of a flight corridor. The left and right sides of a flight corridor are mirror images, with the flight azimuth serving as the line between the two sides. Table A-3 in appendix A provides the lengths of the line segments comprising the downrange area. The scaling information discussed above with respect to the launch area applies to the downrange area as well. If an applicant chooses a map with scale units other than inches per inch the FAA will require the applicant to describe the conversion algorithm to inches per inch and to provide example computations.

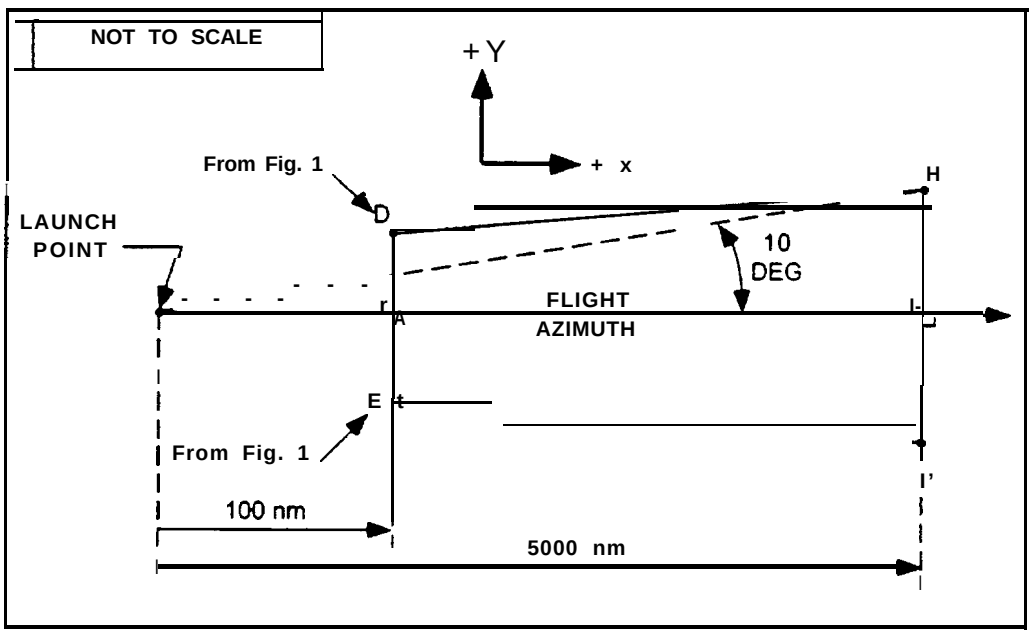

Figure 2
Downrange Area of Flight Corridor

Appendix B

Appendix B provides another means for creating a hypothetical flight corridor from an applicant's proposed launch site. As with a flight corridor created pursuant to appendix A. an appendix B corridor would identify the populations, those within the defined flight corridor, that must be analyzed for risk. An appendix B analysis offers an applicant a means to demonstrate whether a flight corridor from its launch site satisfies the FAA's risk criteria for a guided orbital or suborbital launch vehicle. Appendix B allows an applicant to perform a more individualized containment analysis rather than relying on the more conservative estimates the FAA derived for appendix A. Because an appendix B analysis uses actual meteorological data and a trajectory, whether actual or computer simulated, of a real launch vehicle, it produces a flight corridor of greater accuracy than one created under appendix A. The FAA derived the methodology from techniques developed for federal launch ranges to calculate the distance that debris would travel as a function of perturbing forces. The FAA's derived the assumptions and simplifications in the appendix B analysis from launch vehicle data

representing historical launch vehicle malfunction behavior.

A flight corridor created using appendix B contains, on its face, the same elements as an appendix A flight corridor, including a circular area around a launch point with a radius of D_{max}, an overflight exclusion zone, a launch area and a downrange area. Appendix B, however, produces and configures the last two elements differently than appendix A. The launch area of an appendix B flight corridor shows where launch vehicle debris would impact in the event of a vehicle failure, and takes into account local meteorological conditions. The downrange area of a flight corridor also shows where launch vehicle debris would impact given a vehicle failure, but takes into account vehicle imparted velocity, malfunctions turns, and vehicle guidance and performance dispersions. Also, like an appendix A flight corridor, the uprange portion of the flight corridor is described by a semi-circle arc that is a portion of either the most uprange dispersion circle, or the overflight exclusion zone, whichever is further uprange.

The FAA's proposed appendix B launch area analysis assumes a vehicle failure and destruction at one second intervals along a trajectory z value, which denotes height as measured from the launch point, up to 50.000 feet. An applicant must determine the maximum distance a hazardous piece of debris would travel under local meteorological conditions. The distances that the debris travels provide the boundaries of an appendix B flight corridor's launch area. After a height of 50,000 feet, which is where the FAA estimates, for purposes of this analysis, that debris created by a launch vehicle's destruction has less exposure to atmospheric forces, an applicant shall determine how far harmful debris created by destruction of a launch vehicle would travel based only on malfunction imparted velocity and vehicle dispersion in order to create a downrange area. Although the effects of wind above 50.000 feet are not, in reality, non-existent, they are sufficiently diminished when compared to the effects of malfunction imparted velocity and launch vehicle dispersion for purposes of this estimation.

D_{max} Circle

As with an appendix A flight corridor, an applicant must select each launch point at its proposed launch site from which it expects a guided expendable launch vehicle to take flight. An applicant must obtain the latitude and longitude of the launch point to four decimal places. If relying on a guided orbital launch vehicle, the applicant must also select a launch vehicle class from § 420.2 1, table 1, that best represents the largest class each proposed launch point would support. With the information, the applicant then ascertains the D_{max} that debris is expected to travel from a launch point if a mishap were to occur in the first 10 seconds of flight by employing table A-1, appendix A. Table A-l also provides a maximum distance for sub-orbital launch vehicles. The D_{max} distance provided by table A- 1 defines a circular area around the launch point.

Overflight Exclusion Zone

That circular area is part of an overflight exclusion zone. Again, an applicant uses information from appendix A to create an overflight exclusion zone. although an appendix B flight corridor's uprange boundary may extend further than its overflight exclusion zone. An overflight exclusion zone consists of the circular area defined by the radius D_{max} at the launch point and a corridor of the length prescribed by table A-2. Its downrange boundary is defined by an arc with a radius D_{max} centered on the endpoint prescribed by table A-2. The cross-range boundaries consist of two lines parallel to and to either side of the flight azimuth. Each line is tangent to the upgrade and downrange D_{max} circles as shown in appendix A, figure A- 1. Creation of an overflight exclusion zone is predetermined by the requirements of appendix A and does not require a trajectory for an actual launch vehicle. As with an appendix A overflight exclusion zone, and for the reasons described in this notice's discussion of appendix A, the FAA proposes to require that the public be excluded from this area during launch.

Launch Vehicle Trajectory

An applicant must also obtain or generate a launch vehicle trajectory. The applicant may use either commercially available software or a trajectory provided by the launch vehicle's manufacturer. Because appendix B is based on equations of motion in three dimensions, the appendix B analysis requires that the trajectory be described using a three axis coordinate system. The FAA recommends that an applicant used a WGS-84 ellipsoidal earth models* as the trajectory coordinate system reference ellipsoid in the appendices, because of its general applicability to the analyses that the FAA proposes in appendices B, C and D, the model's wide availability and its development in accordance with military standards and requirements. The WGS-84 model reflects the most current and the most accurate Department of Defense standards for earth models. WGS-84 provides a basic reference frame and geometric figure for the Earth and provides a means for relating positions on various local geodetic coordinate systems, including XYZ. to an Earth-centered, Earth-fixed coordinate system such as the EFG system employed in the appendix B analysis.

The FAA proposes to require time intervals used in the trajectory analysis of no greater than one second for both launch and downrange areas. Data frequency of one second is a compromise a between the low data frequency requirements of the launch area, where dwell times are relatively long, and the high frequency requirements of the downrange area, where dwell times are correspondingly shorter. Accordingly, one second time intervals are sufficient to accommodate linear interpolation between trajectory time points, in the launch and downrange areas, and not degrade the accuracy requirements of the analysis.

In the launch area, an applicant's trajectory must include position data in terms of time after liftoff in right-handed XYZ coordinates centered on the proposed launch point, with the X-axis aligned with the flight azimuth. In the downrange area, the applicant's trajectory must show state vector data in terms of time after liftoff in right-handed x, y, z, x, y, z coordinates, centered on the proposed launch point, with the X-axis aligned with the flight azimuth.

The FAA proposes to require certain technical information to be used to compute an appendix B trajectory. The proposed appendix B parameters comprise the minimum information needed to create a three axis trajectory with 3-degrees-of-freedom (DOF). The 3-DOF are the trajectory positions in each of the three axes of the XYZ coordinate system and it is impossible to adequately describe the launch vehicle position with less than 3-DOF. Any software used to compute a trajectory must incorporate the data required by appendix B, paragraph (b) (1) (ii) (A)-(I) .[35]

Launch Area

A launch area contains a launch point and an overflight exclusion zone, and constitutes the part of the flight corridor calculated using the effects of

[34] Department of Defense World Geodetic System. Military Standard 2401 (Jan. 11. 1994).

[35] Software for creating a 3-DOF trajectory with the accuracy required for an appendix B analysis is commercially available.

atmospheric drag forces on debris produced by a series of hypothetical destructions of a launch vehicle at one second intervals along that trajectory. For purposes of an appendix B analysis, a launch area extends from the further uprange of an OEZ arc or dispersion circle arc downrange to a point on the surface of the earth that corresponds to the debris impact locations, assuming a failure of the vehicle in flight at a height of 50,000 feet. Typically, federal launch ranges account for five major parameters to estimate the size of a flight corridor. These include the effects of vehicle-imparted velocity on debris, the change in launch vehicle position and velocity due to a malfunction turn, guidance errors, the ballistic coefficient of debris, and wind. However. imparted velocity, malfunction turn, and trajectory dispersion, although not insignificant, do not play as great a role early in flight as the wind effects on debris. The wind effect on debris, in turn, depends on the ballistic coefficient of the debris. The FAA determined that for purposes of the launch area, of these parameters, launch vehicle debris and meteorological conditions constitute the most significant, and the FAA therefore proposes to focus on these two factors in the launch area.[36]

The FAA proposes to require an applicant to calculate circles that approximate the debris dispersion for each one second time point on a launch vehicle trajectory. The cross-range lines tangent to those circles provide the borders of a launch area. Calculating the circles consists, in general terms, of a two step process. An applicant must first define 15 mean geometric height intervals along the proposed trajectory in order to obtain data, in accordance with subparagraph (c) (4) of appendix B, regarding the mean atmospheric density, maximum wind speed, fall times and debris dispersions in each of those height intervals. An applicant must then use that data in the calculations proposed in subparagraphs (c) (5) to derive the radius applicable to each height interval (Z_i). Having obtained that radius, an applicant uses it to describe, pursuant to subparagraph (c) (6), a circle referred to as a debris dispersion circle (D_i), around each one second time interval along the vehicle's trajectory, starting at the launch point. An applicant will then ascertain the cross-range boundaries of a flight corridor's launch area by drawing lines that are tangent to all dispersion circles. The final D_i dispersion circle forms the downrange boundary of a flight corridor's launch area.

The launch area represents the effects of meteorological conditions on how far inert debris with a ballistic coefficient of 3 lb/ft.^{2} would travel. Debris comes in many sizes and shapes, but the FAA does not propose to require an applicant's location review analysis to take all such possibilities into account. A complete analysis for an actual launch would entail the determination of the type and size of debris created by each credible failure mode, and the velocity imparted to each piece of debris due to the failure. Instead, for purposes of the appendix B analysis, the FAA proposes to categorize launch vehicle debris by a ballistic coefficient that accounts for the smallest inert debris that may cause harm and that also accounts for the debris most sensitive to wind. A ballistic coefficient reflects the sensitivity of weight and area ratios to drag forces, such as wind dispersion effect. The FAA evaluated wind drift effects on a piece of debris with the smallest hazardous ballistic coefficient. A debris piece with the smallest hazardous ballistic coefficient will play the largest role in ascertaining the total debris dispersion in a launch area. Low beta debris, namely, debris with a ballistic coefficient less than or equal to three pounds per square foot, will have a lower terminal velocity than high ballistic coefficient debris and will spend more time being dispersed by wind forces on descent. Therefore, low ballistic coefficient debris will disperse farther than high ballistic coefficient debris. The FAA proposes a debris piece with a ballistic coefficient of three pounds per square foot for launch area calculations because it is the most wind sensitive debris piece with a potential for harm of reasonable significance. Experience at federal launch ranges has shown that, on average, a debris piece that has a ballistic coefficient of less than three pounds per square foot is not significant in terms of its potential to harm a person in the open.

Although the FAA proposes to assume a ballistic coefficient of three as the smallest piece of wind sensitive debris hazardous to the public, ballistic coefficient is not directly related to fatality criteria based on the kinetic energy of debris. The ballistic coefficient of three is related to a kinetic energy of 58 ft/lbs which represents a probability of fatality of 50 percent for a standing person. It is therefore possible that fatalities could occur for a lower ballistic coefficient and that no fatalities may occur for a higher ballistic coefficient. The FAA proposes to incorporate neither of these conditions into this analysis, and invites comment.

In addition to knowing what debris is of concern, an applicant must know the local meteorological conditions. The FAA proposes that an applicant obtain meteorological data for 15 height intervals in a launch area up to 50,000 feet. The FAA proposes an upper limit of 50,000 feet in the launch area containment analysis of debris because winds above this altitude contribute little to drift distance. Also, once a launch vehicle reaches an altitude of 50.000 feet its velocity vector has pitched down range so that a malfunction turn and explosion velocity, rather than atmospheric drag and wind effects, play the dominant role in determining the dispersion of debris as the debris falls to the surface. The combination of these two factors significantly reduces the effect of winds on uprange and crossrange dispersion after a launch vehicle reaches 50,000 feet. For altitudes less than 50,000 feet, at the same time as low ballistic coefficient debris pieces are highly sensitive to drag forces, the velocity of an explosion caused by destroying a launch vehicle contributes relatively little to the dispersion effect because the drag produced on these light weight pieces results in a high deceleration so they achieve terminal velocity almost instantaneously and drift with the wind. Therefore, launch vehicle induced explosion-velocities are not considered for the launch area of an appendix B containment analysis. Instead, the FAA proposes to require an applicant to use local statistical wind data by altitude for fifteen height intervals. The data must include altitude, atmospheric density, mean East/West meridianal (u) and North/South zonal wind (v), the standard deviation of u and v wind. a correlation coefficient, the number of observations and the wind percentile.

Data acceptable to the FAA is available from NOAA's National Climatic Data Center (NCDC). NOAA Data Centers, of which the NCDC is the largest, provide long-term preservation of, management, and ready accessibility to environmental data. The Centers are part of the National Environmental Satellite, Data and Information Service. The NCDC data set acceptable to the FAA is the "Global Gridded Upper Air Statistics, 1980–1995, CVl.l. March 1996 (CD-ROM)." The Global Gridded Upper Air Statistics (GGUAS) CD-ROM data set describes the atmosphere for each month of the represented year on a 2.5 degree global grid at 15 standard pressure levels. NCDC provides compiled mean and standard deviation values for sea level pressure, wind

[36] Note that the determination of the size of D_{max} included considerations of malfunction turns as well.

speed, air temperature, dew point, height and density. GGUAS also complies eight-point wind roses. The spatial resolution is a 73x144 grid spaced at 2.5 degrees and the temporal resolution is one month. Monthly data have been statistically combined for the period of record 1980–1995.

To simplify the containment analysis, the FAA proposes to allow an applicant to use a mean wind (50%). The FAA proposes to further simplify the analysis by assuming that an applicant's launch pad height is equal to the surface level of the wind measurements provided by the NCDC data base. The actual pad height could be lower or higher than the surface level wind measurement height. The difference between the actual pad height and the surface level measurement height is considered insignificant in terms of its effect on the impact dispersion radius.

The FAA notes that the NCDC database will not necessarily contain measurements of winds for any particular launch site proposed. If a launch point is located in the center of a 2.5 degree NCDC weather grid cell, the farthest distance to a grid cell corner would be along a diagonal from the center of the grid cell to a corner of the grid cell. The wind measurements will be no more than approximately 106 nm from the launch point. This distance is close enough for purposes of a location review containment analysis, and occurs only for a grid located on the equator. In general, the topography within approximately 106 nm of a launch point is assumed to be relatively similar with respect to height above mean-sea-level. As the launch point latitude increases the distance from the wind measurement grid point will decrease. which will reduce errors introduced by this assumption.

Having obtained the necessary meteorological data, an applicant would use data from the GGUAS CD-ROM to estimate the mean atmospheric density, maximum wind speed, height interval fall times, and height interval debris dispersions for 15 mean geometric height intervals. Altitude intervals are denoted by the subscript ''j''. An applicant would then calculate the debris dispersion radius (D,) for each trajectory position whose ''Z'' values, are less than 50,000 ft. Each trajectory time considered is denoted by the variable subscript "i". The initial value of ''i'' is one and the value is increased by increments of one for each subsequent ''Z'' value evaluated. The major dispersion factors are a combination of wind velocity and debris fall time. Because the atmospheric density is a function of altitude and effects the resultant fall time, D_i is estimated by summing the radial dispersions computed for each altitude interval the debris intersects on its descent trajectory. Once all the debris dispersion radii have been calculated, the flight corridor's launch area is produced by plotting each debris dispersion circle on a map, and drawing enveloping lines that enclose the outer boundary of the debris dispersion circles. The uprange portion of the flight corridor is described by a semi-circle arc that is a portion of either the most uprange D_i dispersion circle, or the overflight exclusion zone, whichever is further uprange. The enveloping lines that enclose the final D_i dispersion circle forms the downrange boundary of a flight corridor's launch area.

Downrange Area Containment Analysis

A containment analysis also describes the dimensions of a flight corridor's downrange area. The FAA designed the downrange area analysis to accommodate launch vehicle imparted velocity, malfunction turns, and vehicle guidance and performance dispersions. The analysis to obtain the downrange area of a flight corridor for guided orbital and suborbital launch vehicle trajectories starts with trajectory positions with heights greater than 50,000 feet, that is, the point where the launch area analysis ends. A downrange area for a guided orbital launch vehicle ends 5,000 nautical miles from the launch point. If an applicant has chosen a guided suborbital launch vehicle for the analysis, the analysis must define the impact dispersion area for the final stage, and that impact dispersion area marks the end of a downrange area.

An applicant computes the cross-range boundaries of the downrange area of a flight corridor by calculating the launch vehicle position after a simulated worst-case four second turn, rotating the launch vehicle state vector to account for vehicle guidance and performance dispersions, and then computing an instantaneous impact point. The locus of IIPs describes the impact boundary.

As a first step, an applicant computes a reduction ratio factor that decreases with increasing launch vehicle range. Secondly, an applicant computes the launch vehicle position after a simulated worst-case four-second malfunction turn for each altitude interval along a trajectory. For purposes of the launch site location review, the FAA proposes to rely on a velocity vector malfunction turn angle set at 45" and to decrease this turn angle using the reduction ratio factor, as a function of downrange distance to simulate the constraining effects of increasing velocity in the downrange direction on malfunction turn capability. See figure B-2. The FAA assumes this worst-case delay result in order to account for the maximum dispersion of the vehicle during the time necessary for a person in charge of destroying a launch vehicle to detect a vehicle failure and cause the vehicle's destruction. Figure B-2 in appendix B depicts the velocity vector movement in the yaw plane of the vehicle body axis coordinate system. The figure below depicts the state vector axes and impact locations for a malfunction turn failure and for an on-trajectory failure.

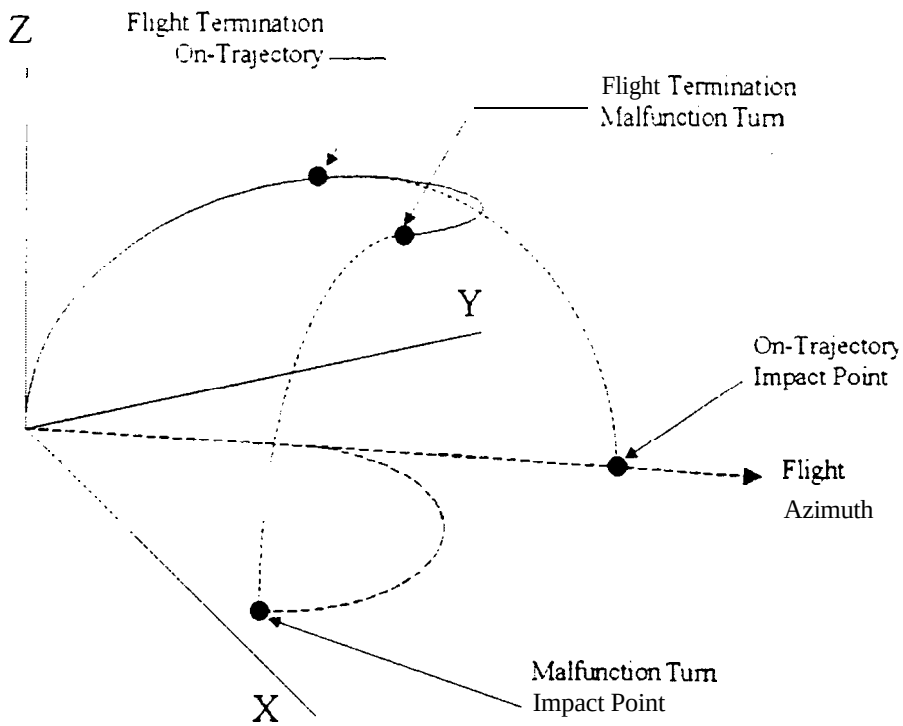

The second step described above assumes perfect performance of the launch vehicle up until the beginning of the malfunction turn. In order, however, to account for normal five sigma (50) performance and guidance dispersions of the launch vehicle prior to the malfunction turn, the applicant next rotates the trajectory state vector. The trajectory state-vector rotation is accomplished in conjunction with a XYZ to ENU coordinate system transformation. This transformation rotates the X and Y axes about the Z axis. The Z and U axes are coincident. Both position and velocity components are rotated. The FAA intends the trajectory azimuth rotation to account for the normal 5-sigma launch vehicle performance and guidance dispersions that may exist at the beginning of a malfunction turn. The rotation angle decreases from three degrees to one degree as the vehicle proceeds downrange, and the rate of decrease is a function of distance from the launch point. This is done because the trajectory azimuth of a launch vehicle with 5-sigma performance and guidance dispersions early in flight could be approximately ±3 degrees from the nominal flight azimuth. Since this azimuth offset is not considered a failure response, the guidance, navigation, and control system is expected to achieve steering corrections. These corrections will eventually reduce the angular offset later in flight as the launch vehicle targets the mission objectives for orbital insertion. If a launch vehicle has 5-sigma performance and guidance dispersions later in flight, the effects of increasing velocity in the downrange direction limits a launch vehicle's capability to alter the trajectory's azimuth. Launch vehicles in the four launch vehicle classes were reviewed to determine the typical range of malfunction-turning rates in the downrange area. The FAA found these rates to be relatively small compared to launch area rates. The FAA proposes the three and one degree turn rates because they encompass the turn rates found during the review process.

Before initiating the IIP computations, an applicant must transform the ENU coordinate system to an EFG coordinate system. This EFG coordinate transformation is employed to simplify the IIP computation.

The IIP computation proposed in appendix B are used for demanding the IIPs to either side of a trajectory by creating latitude and longitude pairs for the left and right flight corridor boundaries. Connecting the latitude and longitude pairs describes the boundary of the downrange area of a flight corridor. The launch site location review IIP calculations assume the absence of atmospheric drag effects. Equations B46–B69 implement an iterative solution to the problem of determining an impact point. This iterative technique includes checks for conditions that will not result in impact point solutions. The conditions prohibiting impact solutions are: (1) An initial launch vehicle position below the earth's surface, (2) a trajectory orbit that is not elliptical, but, parabolic or hyperbolic, (3) a positive perigee height, where the trajectory orbit does not intersect the earth, and (4) the iterative solution does not converge. Any one of the conditions given above will prohibit the computation of an impact point. The iterative approach in equations B46–B69 solves these problems.

Software

The FAA has developed a software tool that performs the flight corridor calculations required by appendix B for a guided orbital launch vehicle. The

software was developed in FORTRAN. All of the assumptions and equations contained in appendix B are implemented in the program. An applicant must provide the geodetic latitude, longitude, launch azimuth, desired wind percentile, D_{max} from table A-1 and D_{oez} from table A-2 as input to the program. The software outputs an ASCII text file of geodetic latitudes and longitudes that describe a flight corridor boundary.

Estimating Public Risk

Upon completing a flight corridor, an applicant must estimate the risk to the public within the flight corridor to determine whether that risk falls within acceptable levels. If an applicant demonstrates that no part of the flight corridor is over a populated area, the flight corridor satisfies the FAA's risk thresholds, and an applicant's application may rely on its appendix B analysis. If a flight corridor includes a populated area, an applicant has the option of rotating an appendix B flight corridor using a different launch point or azimuth to avoid population, or of conducting an overflight risk analysis as provided in appendix C.

Appendix C

Under a launch site location review, once an applicant has created a flight corridor employing either appendix A or B, the applicant must ascertain whether there is population within the flight corridor. If there is no population, the FAA will approve the location of the proposed launch point for the type and class of launch vehicle analyzed. If there is population, an applicant must employ appendix C to perform an overflight risk analysis for the corridor. An appendix C risk analysis determines whether or not the risk to the public from a hypothetical launch exceeds the FAA's risk threshold of an estimated expected casualty (E,) of no more than 30×10^{-6} per launch. An appendix C risk analysis estimates the E_c overflight contribution from a single hypothetical launch whose flight termination system is assumed to work perfectly. The analysis takes into account the probability of a vehicle failing throughout its trajectory, dwell times[37] over individual populated areas, and the probability of impact within those areas. The analysis also takes into account the effective casualty area of a vehicle class. the size of the populated area, and the population density of the exposed population.

Estimating E_c for an actual launch takes a large number of variables and considerations into account. The risk analysis provided in appendix C provides a somewhat simpler approach to estimating E_c within the boundaries of a flight corridor than might be necessary in performing a risk analysis for an actual launch. The FAA proposes, for purposes of determining the acceptability of a launch site's location, to rely only on variables relevant to ensuring that the site itself offers at least one flight corridor sufficiently isolated from population for safety. Accordingly, many of the factors that a launch operator will take into account will not be reflected here.

In brief, in order for an applicant to perform an appendix C risk analysis, the applicant must first determine whether any populated areas are present within an appendix A or B flight corridor. If so, the applicant must obtain area and population data. At this point an applicant has a choice. Appendix C requires that an applicant calculate the probability of impact for each populated area, and then determine an E_c value for each populated area. To obtain the estimated E_c for an entire flight corridor, the applicant adds-or sums-the E_c results for each populated area. If the population within the flight corridor is relatively small, an applicant may wish to conduct a less rigorous analysis by making conservative assumptions. Appendix C also offers the option of analyzing a worst-case flight corridor for those flight corridors where such an approach might save time and analysis. Examples of such simplifications are provided.

Identification and Location of Population

In order to perform an E_c analysis, an applicant must first identify the populated areas within a flight corridor. For the first 100 nautical miles from a launch point downrange a U.S. census block group serves as the maximum size of an individual populated areas permitted under an appendix C analysis. The proposed maximum permitted size of an individual populated area beyond 100 nautical mile downrange is a 1 degree latitude x 1 degree longitude grid. The size of that area analyzed will play out differently depending on the location of the proposed launch site. For example, if an applicant proposed a coastal site, the applicant would presumably present the FAA with a flight corridor mostly over water. Population may be limited to that of a few islands, minimizing the amount of data and analysis necessary. If an applicant proposes a launch site located further inland, the applicant would need to obtain the area and population of each census block group in the first 100 nm of the flight corridor. This may prove time consuming, although the FAA has proposed alternative approach that may simplify the process for such applicants. An applicant may also propose to operate a launch site on foreign territory, where U.S. census data would not apply. In that event, the FAA would apply the principles underlying a launch site location review to the available data on a case-by-case basis.

The proposed regulations require the analysis of populations at the census block group level for the first 100 nm from the launch point in the flight corridor. An applicant shall employ data from the latest census.[38] An applicant must also include population that may not be included in the U.S. census, such as military base personnel. The FAA recognizes a census block group to be a reasonable populated area for analysis because the risk early in flight is greatest due to long dwell times. IIP range rates in a launch area are relatively show, which exposes the launch area populations to launch vehicle risks for a longer period of time when compared to similar populations in the downrange area. Depending on the launch site and launch vehicle, a census block group could be exposed to launch vehicle risks for tens of seconds. In contrast to the size of a populated area in the downrange area, the increased risk due to longer dwell times requires a more detailed evaluation of the launch area for E_c purposes. A census block group is an appropriate size for analysis because it is small enough to accommodate the assumption that a populated area contains homogeneously distributed population without grossly distorting the outcome of the E_c estimates, and because the data is readily available for populations in the United States. Although a census block is smaller and therefore even more accurate, only census block centroids. rather than the more useful geographic area, are available from the U.S. Census Bureau. The FAA also proposes to allow the census block group to serve as the smallest unit addressed because electronic data is available at the census block group level, which will allow for more efficient execution of the computations. Although not as accurate as a census block, a census block group is also sufficiently accurate to serve as

[37] Although an applicant who calculates an appendix B flight corridor will know actual dwell times for its E_c analysis. the FAA proposes to supply a constant to approximate dwell time for an applicant who relies on an appendix A flight corridor.

[38] Some geographic information software has the capacity to import U.S. Census Bureau demographic and geographic data.

the smallest populated area for a launch site location review because the launch licensing process will mandate the more thorough risk analysis necessary for a particular launch. An applicant may find the need to use only a portion of a census block group, such as when a populated area is divided by a flight corridor boundary. In that case an applicant should use the population density of the block group to reflect the population in that portion of the census block group.

FAA proposes to allow an applicant to evaluate the presence of people in larger increments of area in the downrange area of a flight corridor than in the launch area of a flight corridor. Populations in the downrange area of a flight corridor must be analyzed in area no greater than 1" x 1" latitude and longitude grid coordinates. Because dwell times downrange are shorter, the risk to the individual populated areas is less and, therefore, the FAA is willing to accept a different degree of accuracy. IIP range rates in the downrange area can achieve speeds of 500 nm/second. Because the longest distance in a grid space would be approximately 85 nm for a grid on the equator, which is where the largest grid area will be found, the launch vehicle IIP dwell time would be less than 0.20 seconds over the grid. This reduces the risk to population in that grid significantly compared with population in the launch area.

The data needed for a downrange area analysis is also readily available. One source for population data in an area no greater than 1° x 1" latitude and longitude grid coordinates in a database of the Carbon Dioxide Information Analysis Center (CDIAC), Oak Ridge National Laboratory. The CDIAC database is "Global Population Distribution (1990), Terrestrial Area and Country Name Information on a One by One Degree Grid Cell Basis." This database contains one degree by one degree grid information on the world-wide distribution of population for 1990 and country specific information on the percentage of a country's population present to each grid cell.

The CDIAC obtained its population estimates from the United Nations FAO Yearbook,[39] the Guinness World Data Book.40 and the Rand McNally World Atlas [41] for approximately 6,000 cities with populations greater than 50,000 inhabitants. The population data was updated by CDIAC to 1990 values with available census data. For the rural population allocation, the CDIAC developed global rural population distribution factors based on national population data, data on approximately 90.000 cities and towns, and the assumption that rural population is proportional to the number of cities and towns within each grid cell for each country.

Probability of Impact

The next step in the process would be to ascertain the probability of impact for each populated area. In other words, an applicant must find the probability that debris will land in each populated area within the flight corridor under analysis. For this, the applicant must find the probability of impact in both the cross-range and downrange directions, by employing equation Cl for an appendix A flight corridor for an orbital launch or equations C2 through C4 for an appendix A corridor that describes a suborbital launch. For an analysis based on an appendix B flight corridor, an applicant will employ equation C5 for an orbital launch or equations C6 and C8 for a suborbital launch. For both appendix A and B corridors, the probability of impact (Pi) within a particular populated area is equal to the product of the probability of impact in the downrange (P_x) and cross range (P_y) directions, and the probability of vehicle failure (P_r).

$$P_i = P_y * P_x * P_f$$

The analysis applicable to both appendix A and B flight corridors is the same for the cross-range direction,[42] but employs a different equation to determine the probability of impact in the downrange direction. For an appendix A corridor, the FAA proposes to specify a constant in equation C 1 to approximate dwell time for the downrange direction. In equation C5 an applicant will employ actual dwell times obtained from the trajectory generated pursuant to appendix B.

[42] For Equations C-l, C-3, C-5 and C-7 the FAA approximated the probability of impact in the cross-range direction (P_y) by applying Simpson's Normal Probability Function. The FAA employed Simpson's rule to derive the following equation:

$$P_y = \frac{\left(\frac{|y_2 - y_1|}{\sigma_y}\right)}{6\sqrt{2\pi}}\left(\exp\left(\frac{-\left(\gamma_1/\sigma_\gamma\right)^2}{2}\right) + 4\cdot\exp\left[\frac{-\left(\frac{y_1+y_2}{2\sigma_y}\right)^2}{2}\right] + \exp\left(\frac{-\left(\gamma_2/\sigma_\gamma\right)^2}{2}\right)\right)$$

Simpson's approximation of the Elliptical Normal Probability Function is described in General Motors Corporation Defense System Division's Elliptical Normal Probability Function, (Apr. 6, 1960).

An applicant who relies on an appendix A flight corridor will use equation Cl to determine the probability of impact for a particular populated area in the downrange direction by finding the range rate and assuming a total thrusting time of 643 seconds. Equation Cl reflects the fact that appendix A does not employ trajectory data, and therefore, employs a technique for estimating dwell times as a function of range and range rate to determine the probability of impact in the downrange direction. Proposed table C-Z provides the appendix A flight corridor IIP range intervals and corresponding IIP range rates for use in Equation C 1.

To create proposed table C-2, the FAA employed actual trajectory data to determine individual range rates for Atlas, Delta and Titan launch vehicles. The FAA computed the IIP for each trajectory time point, and the range rates were determined by subtracting IIP ranges (RIIP) over one-second intervals. This provided a per second range rate, referred to below at R-dot. The average range rates over the range intervals, shown in the table below, were estimated by dividing the difference of

[39] United Nations FAO Yearbook. Vol. 47. Rome. 1993.

[40] The Guinness World Data Book, Guinness Pub Ltd., Middlesex. England. 1993.

[41] Rand McNally World Atlas. Rand McNally. New York, 1991.

[42] See above text for footnote 42

the upper value of adjacent IIP ranges by the elapsed trajectory time over the range interval. For example, the following Delta launch vehicle data was used to determine the IIP range rate from 101 through 500 nm:

RIIP1 = 100 nm
TALO1 (time after lift-off 1) = 97 sec
RIIP2 = 500 nm
TAL02 = 217 sec
(RIIP2 – RIIP 1) (TAL02 – TALO1) = 3.33 nm/s

The FAA derived the total average thrusting time of 643 seconds from the data in table 5 by dividing the difference of the upper value of adjacent IIP ranges by the average IIP range rate corresponding to the largest IIP range and summing the results over the set of IIP ranges. The following computations are given as examples of how the FAA reached this determination.

Let:
RIIP1 = 100 nm
RIIP2 = 500 nm
R-dot = 3.00 nm/s
(RIIP2 – RIIP1)/R-dot = 133.33 sec

TABLE 5.—DATA TO DERIVE TOTAL THRUSTING TIME

IIP range (nm)	IIP range rate (nm/s)				Δt(s)
	Delta	Atlas	Titan	Avg.	
0–100	1.03	085	0.96	0.91	110.50
100–500	3.33	3.77	2.23	3.00	133.33
500–1500	4.27	3.66	2.73	3.20	312.99
1500–2500	9.01	21.74	12.99	17.37	57.59
2501–3000	33.33	50.00	41.67	45.84	10.91
3001–4000	66.67	90.91	83.33	87.12	11.48
4001–5000	166.67	142.86	166.67	154.77	6.46
Total-Δt					643.26

The "X" distances were measured directly off the mapping information source.

An applicant who relies on an appendix B flight corridor will employ proposed equation C5 or equations C6 through C8 depending on whether the flight corridor culminates in an impact dispersion area or not. Equation C5 reflects the fact that, unlike an appendix A flight corridor, the trajectory data used to create an appendix B flight corridor provides downrange instantaneous impact points (IIPs). Accordingly, the dwell time associated with a populated area may be ascertained for the difference between the closest and furthest downrange distances of the populated area. See figure C-2.

An applicant may find the following six step procedure helpful in determining the dwell time for individual populated areas that equation C5 calls for. The subscripts to not correspond to subscripts in the appendix.

Step *1:* Determine the trajectory time (t_1) associated with the trajectory IIP position (xi), that immediately precedes the uprange point on the populated area boundary. This is a accomplished by locating the IIP points in the vicinity of the populated area, drawing lines normal to the trajectory IIP ground trace, and choosing the trajectory time for the IIP point whose normal is closest to the uprange boundary of the populated area but does not intersect it. The distance from the launch point to x_1 may be determined using the range and bearing equations in appendix A, paragraph (b).

Step 2: Determine the trajectory time (t_2) associated with the trajectory IIP position (x_2) that just exceeds the downrange point on the populated area boundary. This is accomplished by locating the IIP point in the vicinity of the populated area, drawing lines normal to the trajectory IIP ground trace, and choosing the trajectory time for the IIP point whose normal is closest to the downrange boundary of the populated area but does not intersect it. The distance from the launch point to x_2 may be determined using the range and bearing equations in Appendix A. section (b).

Step 3: Determines the average IIP range rate (R) for the flight period determined in Steps 1 and 2 above.

$$\bar{\dot{R}} = \frac{(x_2 - x_1)}{(t_2 - t_1)} \text{ (units in nm / s)}$$

Step 4: Determine the distance along the nominal trajectory to the uprange point (x_3) on the populated area boundary. This is accomplished by drawing a line normal to the trajectory IIP ground trace and tangent to the uprange boundary of the populated area, and determining the distance along the nominal trajectory IIP ground trace from the launch point to the intersection of the normal and the ground trace.

Step 5: Determine the distance along the nominal trajectory to the downrange point (x_4) on the populated area boundary. This is accomplished by drawing a line normal to the trajectory IIP ground trace and tangent to the downrange boundary of the populated area, and determining the distance along the nominal trajectory IIP ground trace from the launch point to the intersection of the normal and the ground trace.

Step 6: The dwell time (t_d) is estimated by the following equation.

$$t_d = \frac{(x_4 - x_3)}{\bar{\dot{R}}} \text{ (units in seconds)}$$

For either type of flight corridor, an applicant determines the probability of impact in the cross range direction, (P_y), through a series of steps, of which the first is measuring the distance from the nominal trajectory IIP ground trace to the closest and furthest points in the cross range direction of the area that contains population. The populated area may consist of a census block group or a 1 degree latitude by 1 degree longitude grid. See figure C-l. To determine the distribution of the debris pattern in that populated area, the applicant needs to estimate the standard deviation of debris impacts. The FAA proposes that, for purposes of an appendix C analysis, that the cross-range boundaries of a flight corridor represent five standard deviations 5δ of all debris impacts form normal and malfunction trajectories.[43] To apply this to a populated area, an applicant must first find the distance

[43] Five sigma should represent 99.9999426% of all debris impacts from normal and malfunction trajectories assuming a functioning FTS. The one-sided-tail percentage area under the Gaussian Normal Probability curve beyond five-sigma is approximately 0 000000287%. Since the normal curve is symmetric this value can be doubled and subtracted from one (I) to determine the percentage area between the plus-and-minus five sigma limits. This results in the 99.9999426% value. See. Frederick E. Croxton. *Elementary Statistics with Applications in Medicine. 323* (1953).

from the nominal trajectory to the cross-range boundary, measured on a line normal to the trajectory through the geographic center of the populated area, and then divide that distance by five.

Finally, the probability of failure is also an element in calculating the probability of impact. The FAA proposes for the launch site location analysis to assign a failure probability (P_f) constant of P_f=0. 10 for guided launch vehicles. This represents a conservative estimate of the failure percentage of current launch vehicles, since many current launch vehicles are more reliable. The appendix C process assumes that the probability of impacting within the corridor is one, and the probability of impacting outside the corridor is zero. The flight termination system is assumed to function perfectly in all failure scenarios.

A final variation on computing the probability of impact for a particular populated area is used when computing the probability of impact (P,) within the impact dispersion area of a guided suborbital launch vehicle. In this case, the probability of success (P_s) is substituted for the probability of failure (P_f), and an applicant shall employ a method similar to that used in appendix D to calculate the probability of impact for any populated areas inside the impact dispersion area. This divergence, the use of probability of success rather than probability of failure, from the variable used for an orbital launch vehicle arises out of the relative risk associated with an impact dispersion area of a guided suborbital launch vehicle. The same risks associated with a guided orbital launch are also associated with a guided sub-orbital launch except for the final stage of the guided suborbital mission, which is intended to return to earth rather than to enter orbit. On the basis of past history, the FAA has concluded that the final stage has a high reliability and will impact in the designated impact dispersion area, as intended from a successful mission. The FAA intends through its proposed launch site location review to analyze high risk events, and because the risk due to a planned impact in the dispersion area would be much higher than an unplanned impact, the FAA proposes to use P_s inside the impact dispersion area rather the P_f for determining the probability of impact in a guided suborbital launch vehicle's impact dispersion area.[44]

[44] The actual probability used in the analysis is 0.98.

Totaling Risk of All Populated Areas *in Flight Corridor*

The E_c estimate for a flight corridor is a summation of the risk to each populated area and results in an estimate of E_c inside the corridor, E_c (Corridor). This means that an applicant would estimate E_c for each individual populated area within a flight corridor, using the following equation:

$$E_{ck} = P_i \cdot \left(\frac{A_c}{A_k}\right) \cdot N_k$$

P_i is the probability of hitting the populated area. A_C is the effective casualty area of the vehicle and may be obtained from table C-3. A_k is the area of the populated area. N_k is the population in A_k, and is obtained from census data. The label "k" is used to identify the individual populated area. The summed E_c for all populated areas added together is the E_c (Corridor).

The FAA proposes to require an applicant to use an effective casualty area specific to a launch vehicle class and range when performing the E_c calculation. An effective casualty area (A,) means the aggregate casualty area of each piece of debris created by a launch vehicle failure at a particular points on its trajectory. The casualty area for each piece of debris is the area within which 100 percent of the unprotected population on the ground is assumed to be a casualty. This area is based on the characteristics of the debris piece including its size, the path angle of its trajectory, impact explosions, and debris skip, splatter, and bounce. In each of the vehicle classes, the A, decreases, resulting in a smaller casualty area, as a function of distance downrange because vehicle size and explosive potential decreases as explosive propellant is consumed and expended stages are ejected during vehicle flight.

An effective casualty area is a function of time-after-liftoff is proposed in table C-3 for launch vehicle classes listed in table 1 of § 420.21. The FAA derived the effective casualty areas in table C-3 from DAMP, a series of risk estimation computer programs used at federal launch ranges, to evaluate the vehicle classes described in table 1, § 420.21. DAMP considers other factors besides debris characteristics, such as the size of a standing person, which increases the casualty area, and sheltering, which would tend to decrease the casualty area. Because considering sheltering has a greater effect than considering the size of a standing person, and was not assumed in table C-3, the effective casualty areas in table C-3 are conservative.

An applicant calculates casualty expectancy for each populated area within a flight corridor. After the casualty expectancies have been estimated for all populated areas, the E_c values are summed to obtain the total corridor risk. The total is multiplied by two to estimate the final value for E_c(Corridor). The FAA is proposing this multiplier to account for the error introduced by the risk estimation approach of the launch site location review. Both the method used to construct a flight corridor and the method used to analyze risk contributes error. For example, an appendix A flight corridor is not based on actual wind data, and even though its size is conservative in nature, this size alone can cause the risk to be underestimated in appendix C. In other words, what the analysis gains in conservatism with the greater size of an appendix A corridor it may, on occasion, lose in conservatism due to the corresponding decrease in population density relative to an appendix B corridor. Conversely, an appendix B corridor, which may result in a higher E_c total due to the greater density attributable to the smaller corridor, may not encompass a populated area that would otherwise be analyzed for risk as part of an appendix A corridor. In addition, these calculations do not account for any secondary effects such as fire and collapsing structures that may result from impacting debris. Accordingly, to compensate for these inherent discrepancies, a safety factor is advisable in order to guard against licensing the operation of a launch site which may never be able to support a licensed launch. Also, an appendix B flight corridor is based on a number of approximations, including the descent rate of a piece of debris, the variability of a nominal launch vehicle trajectory prior to a failure, and a malfunction turn. Both the appendix A and B flight corridors for orbital launch vehicles end at 5,000 am, leaving out a large area of overflight, albeit with an IIP with very high velocity and extremely small dwell times. Additionally, the E_c analysis in appendix C itself can underestimate risk to the population within a flight corridor due to certain approximations, including the probability of impact in the cross-range direction (P_y), which uses Simpson's approximation of the Elliptical Normal Probability Function, and the determination that the width of a flight corridor is assumed to represent a 5-sigma normal distribution. Cities present in a flight corridor can also cause the risk to be underestimated because the appendix C method

averages population over areas that may be as large as a 1" x 1" grid. Perhaps the most important factor in contributing to possible error is the fact that the proposed location review assumes a perfectly functioning flight termination system. Accordingly, the FAA has chosen a multiplier of two to balance its intent to only approve launch sites that are safe for the launches intended to be launched from the launch site, and to minimize the burden on applicants.

The FAA will not approve the proposed launch site location if the estimated expected casualty exceeds 30 x 10^{-6}. An applicant may either modify its proposal, or if the flight corridor used was generated by the method proposed in appendix A, use the typically less conservative but more accurate method proposed in appendix B to narrow the flight corridor and perform another appendix C overflight risk analysis. An applicant may employ specified variations to the analysis described above. Six variations are identified in appendix C. The first four variations permit an application to make conservative assumptions that would lead to an overestimation of the corridor E_c compared with the more detailed process described. Although appendix C's approach simplifies a typical launch safety analysis somewhat by providing conservative default parameters to use, it may also prove unnecessarily complex for applicants proposing launch sites with launch corridors encompassing extremely few people. For those situations, appendix C provides the option for an applicant to further simplify the estimation of casualty expectancy by making worst-case assumptions that would produce a higher value of the corridor E_c compared with the analysis defined in appendix C, subparagraphs (c) (1)–(8). This may be particularly useful when an applicant believes E_c is well below the acceptable value.[45]

These variations would allow an applicant to assume that P_x and P_y have a value of 1 .O for all populated areas, or combine populated areas into one or more larger populated areas and use the greatest population density of the component populated areas for the combined area or areas. An applicant may also assume P_y has a value of one for any given populated area, or, for any given P_x sector, assume P_y has a value of one and use a worst case population density for the sector. A P_x sector is an area spanning the width of a flight corridor and bounded by two time points on the trajectory IIP ground trace. All four of these reduce the number of calculations required for applicants with little population within a flight corridor.

Another option, permitted in appendix C, is for an applicant who would otherwise fail the baseline analysis to perform a more refined E_c analysis by negating the baseline approach's overestimation of the probability of impact in each populated area. If the flight corridor includes populated areas that are irregular in shape, the equations for probability of impact in appendix C may cause E_c to be overestimated. This is because the result of the P_i computation for each populated area represents the probability of impacting within a rectangular area that bounds the populated area. As shown in figure C-1 in appendix C, the length of two sides of the rectangle would be $x_2 - x_1$, and the length of the other two sides would be $y_2 - y_1$. Populated areas used to support the appendix C analysis must be no bigger than a US. census block group for the first 100 nautical miles from a launch point and no bigger than a 1 degree latitude x 1 degree longitude grid (1" x 1" grid) beyond 100 nautical miles downrange. Whether the populated area is a census block group, a 1" x 1° grid, or a land mass such as a small island, it will not likely be a rectangle. Even a 1° x 1" grid near the equator, which approximates a rectangle, will not line up with the trajectory ground trace. Thus, a portion of the P_i rectangle includes area outside the populated area being evaluated. The probability of impacting in the rectangle is higher than impacting just in the populated area being evaluated. The value of the probability of impact calculated in accordance with appendix C will thus likely be overestimated.

One approach permitted in appendix C is to divide any given populated area into smaller rectangles, determine P_i for each individual rectangle, and sum the individual impact probabilities to determine P, for the entire populated area. A second approach permitted in appendix C is, for a given populated area, to use the ratio of the populated area to the area of the original P, rectangle.

If the estimated expected casualty still exceeds 30x10-6, the FAA will not approve the proposed launch site location. In that event, the only remaining options for an applicant would be to rely on one of its potential customers obtaining a launch license for launch from the proposed site.

The FAA considered the option of increasing the accuracy of appendix C by employing a procedure that ensures individual populated areas have homogeneous population densities. The FAA considered this because the probability of impact equations in appendix C can cause the E_c for an individual populated area to be underestimated when unequal population densities occur within the area. This can occur, for example, when a populated area contains one or more densely populated cities interspersed with large land mass areas with rural population. The proposed E_c equation distributes the population evenly throughout the populated area. Accordingly, the E_c may be somewhat underestimated or over-estimated for portions of the populated area. The FAA considered requiring applicants to use smaller areas with homogeneous population densities in order to more accurately estimate the E_c, but chose not to because any error should be accounted for with the multiplier of two discussed above.

Appendix D

Appendix D contains the FAA's proposed method for determining the acceptability of the location of a launch site for launching unguided suborbital launch vehicles. Appendix D describes how to define an overflight exclusion zone and each impact dispersion area to be analyzed for risk for a representative launch vehicle. Proposed appendix D also describes how to estimate whether risk to the public, measured by expected casualty, falls within the FAA's threshold of acceptable risk. In short, the proposed approach requires an applicant to define an overflight exclusion zone around a launch point, determine the impact point for each spent stage and then define an impact dispersion area around each impact point. If populated areas are located in the impact dispersion areas and cannot be excluded by altering the launch azimuth, the FAA would require a risk analysis that demonstrates that risk to the public remains within acceptable levels.

As a first step, an applicant would select which launch points at the proposed launch site would be used for the launch of unguided suborbital launch vehicles. An applicant must also then select an existing launch vehicle, for which apogee data is available, whose final stage apogee represents the maximum altitude of any intended unguided suborbital launch vehicle intended for launch from that launch point. The applicant would then plot the distance, which is referred to as the

[45] The purpose of the E_c analysis as part of the launch sire location review is not to determine a value of E_c but rather to confidently demonstrate that E_c is less than the acceptable threshold value.

impact range, from the launch point to the nominal impact point on the azimuth for each stage. Employing the impact dispersion radius of each stage, the applicant would define an impact dispersion area around each nominal impact point.

The FAA's proposed methodology for its proposed impact dispersion area requirements is grounded in three assumptions which reflect current practice. For purposes of this location review, the FAA assumes that unguided suborbital launch vehicles are not equipped with a flight termination system, and that public risk criteria are accordingly met through the implementation of a wind weighting system, launch procedures and restrictions, and the proper selection of a launch azimuth and elevation angles.46 These aspects are currently reflected in FAA guidelines and will be addressed in its regulations for launches from non-federal launch sites. The cumulative launch experience in unguided suborbital launch vehicles demonstrates that risk to the public from launches of these vehicles is attributable to planned stage impact during a successful flight. Controlling these risks solely through measures implemented prior to flight rather than relying on active measures during flight, as is the case for a vehicle equipped with an FTS, has proved historically an acceptable approach to assuring protection of the public. Accordingly, the appendix D analysis should adequately address the general suitability of each launch point for unguided suborbital launch vehicle launches up to the altitude proposed. Operational requirements imposed on a launch licensee through license conditions should adequately address risks posed by the actual launch of unguided suborbital launch vehicles.

The proposed location review for a launch point that will support unguided suborbital launch vehicles also assume that intermediate and final stages impact the earth within five standard deviations 5σ of each nominal, no wind, impact point. This means that an appendix D analysis does not account for failures outside of five standard deviations from each intended impact point.

It also means that an appendix D analysis does not simulate an actual launch in actual wind conditions. For actual launches, wind weighting can be used to obtain the nominal, no wind, impact point for the final stage only. In order to ensure that the launch meets E_c, ship hit, and aircraft hit probabilities, launch operators compute the wind drifted impact points of all stages using the launcher settings determined through wind weighting so that intermediate stage impacts are determined prior to launch. Although appendix D does not address this fact directly, it does show that at least some launches can be conducted depending on the wind conditions.

Defining an Overflight Exclusion Zone and Impact Dispersion Areas

The areas an applicant will analyze for risk to the public posed by the launch of an unguided suborbital launch vehicle consist of an overflight exclusion zone and state impact dispersion areas. Having selected a launch point and a launch vehicle for which empirical data is available, an applicant defines each zone and area using the methodology provided. An overflight exclusion zone shall consist of a circle with a radius of 1600 feet centered on a launch point. An overflight exclusion zone is the area which must be free of the public during a launch. Creation of each impact dispersion area involves several more steps. For each stage of the analyzed vehicle an applicant must identify the nominal stage impact point on the azimuth where the stage is supposed to land, and draw a circle around that point, using the range and bearing equations of appendix A or GIS software. That circle describes the impact dispersion area, and an applicant defines an impact dispersion area for each stage.

An applicant must at the outset provide the geodetic latitude and longitude of a launch point that is proposes to offer for launch, and select a flight azimuth. Once an applicant has selected a launch point location and azimuth, the next step is to determine a 1600 foot radius overflight exclusion zone for that launch point. As with an overflight exclusion zone created pursuant to appendices A and B, an applicant must show that the public would be cleared from its overflight exclusion zone prior to launch. Although suborbital vehicles have a very low likelihood of failure, failure is more likely to occur in the early stages of the launch. Consequently, the FAA proposes to guard against that risk through requiring an applicant to show the ability to evacuate an overflight exclusion zone. As with the flight corridors of appendices A and B, the FAA proposes to base the size of the overflight exclusion zone on the maximum distance that debris is expected to travel from a launch point if a mishap were to occur very early in flight. The FAA has estimated the D_{max} for an unguided suborbital launch vehicle, and the result is 1600 feet. Accordingly, an applicant would define an appendix D overflight exclusion zone as a circle with a radius of 1600 feet.

Because an applicant must choose the maximum latitude anticipated of a

46 The flight safety program of an unguided suborbital launch vehicle without a flight termination system typically takes place and is concluded prior to flight A launch operator achieves flight safety by implementing a flight based on launch vehicle performance parameters, launch vehicle dispersion parameters and other sources of error. such as wind measurement errors A launch operator will offset the effects of winds measured on the day of launch by adjusting the azimuth and elevation of the launch vehicle's launcher accordingly The methodology for correcting for actual wind conditions on the day of launch is called wind weighting. The products of a wind weighting analysis determine launcher azimuth and elevation settings that correct for wind effects on an unguided launch vehicle

During preflight planning a launch operator determines launch vehicle dispersion, which is the potential change in the location of impact, by modeling the known causes of systematic errors. Variations in thrust. stage weight, payload weight and stage ignition time may produce errors. and will typically be included in any error model. Thrust misalignment, and the misalignment of nozzles or fins must also be modeled because of their capacity to contribute to error. A model also incorporates the error created by separation of the launch vehicle from the launcher. and accounts for any errors in motor impulse. drag estimate and launcher setting Most significantly, a model analyzes wind error. Wind error modeling accounts for the measurement errors in the measuring system employed and the time elapsed between the time of measurement and the time of launch. Once these elements have been determined. wind error will be incorporated into the mode! to obtain the predicted impact points and total launch vehicle dispersion.

Historically. one of three methods have been used to correct for actual wind conditions on the day of launch. Both NASA at Wallops Flight Facility and the US Army at White Sands hlissile Range have developed and improved methods of predicting the wind effects over the years. The three wind weighting methods that have evolved include: (1) The manual method. (2) the Lewis method. and (3) the 5-Degree-Of-Freedom (DOF) method. The difference between the methods is one of complexity and accuracy. The manual method is the least complex. but produces the largest error. The 5-DOF method is the most complex. produces the least error. and is currently employed by safety offices at Wallops Flight Facility and White Sands hlissile Range.

Each of the wind weighting methods produce launch vehicle elevation and azimuth settings. Other launch factors that play a role. however. may be necessary to ensure the wind weighting solutions are within the assumptions made in the pre-flight dispersion analysis. These factors may include the required height and period of wind measurements. limitations on the maximum ballistic wind and wind variability at which launch would be permitted. and a determination regarding maximum launcher setting angles.

The FAA derived the methods for defining an impact dispersion area proposed in appendix D by assuming that a launch operator would use a 5-DOF method of wind weighting. This does not preclude an applicant for a launch license from using another wind weighting method to develop impact dispersion areas. but the FAA proposes to address such issues in a rulemaking concerning launch licensing requircmcnts.

suborbital launch vehicle for launch from its site, an applicant needs to acquire the apogee of each stage of a representative vehicle. An applicant need not possess full information regarding a specific representative launch vehicle. All that is necessary is the apogee of each stage. The apogee height must be obtained from an actual launch conducted at an 84" elevation angle. If needed, data is available from the FAA. The FAA has compiled apogee data from past launches from Wallops Flight Facility for a range of launch vehicles and payloads. This data will be provided to an applicant upon request and may be used to perform the analysis.

An applicant then defines impact dispersion areas for each stage's nominal impact point. Having selected a launch vehicle most representative of what the applicant intends for launch from the proposed launch point, an applicant will use either its own empirical apogee data or data from one of the vehicles in the FAA's data base. Whether an applicant uses vehicle apogee data obtained from the FAA or from elsewhere, the applicant must employ the FAA's proposed range and dispersion factors to determine the location of each nominal impact point and the size of each impact dispersion area.

The FAA proposes a means of estimating the distances of both an impact range and an impact dispersion radius. Under proposed appendix D, an applicant would estimate the impact range and dispersion parameters by multiplying the apogee of a launch vehicle intended for the prospective launch site by the FAA's proposed factors. The FAA proposes impact range and impact dispersion factors, which it derived from launch vehicle pedigrees of sounding rockets used by NASA Wallops Flight Facility in its sounding rocket program.[47] The proposed factors provide estimators of staging data for an unguided vehicle launched at a standard launcher elevation, which is the angle between the launch vehicle's major axis (x) and the ground, of 84". the appendix defines the relationship between the apogee of a launch vehicle stage, an impact range and a 5σ dispersion radius of a stage. This relationship is expressed as two constants, which vary with the altitude of the apogee, an impact range factor and an impact dispersion factor.

To locate each nominal impact point, an applicant will calculate the impact range for the final stage and each intermediate state. An impact range describes the distance between an applicant's proposed launch point and the nominal impact point of a stage, or, in other words, its estimated landing spot along the azimuth selected for analysis. For this estimation, an applicant would employ the FAA's proposed impact range factors of 0.4 or 0.7 as multipliers for the apogee of the stage. If an apogee is less than 100 kilometers, the applicant shall employ 0.4 as the impact range factor for that stage. If the apogee of a stage is 100 kilometers or more, the applicant shall use 0.7 as a multiplier. In plotting the impact points on a map, an applicant shall employ the methods provided in appendix A.

An impact dispersion radius descries the impact dispersion area of a stage. The FAA proposes to rely on an estimated impact dispersion radius of five standard deviations 5σ because significant population, such as a densely populated city, in areas within distances up to 5σ of the impact point could cause significant public risk. An applicant shall obtain the radius of the impact dispersion area by multiplying the stage apogee by the FAA's proposed impact dispersion factor of 0.4 for an apogee less than 100 kilometers and of 0.7 for an apogee of 100 kilometers or more. The final stage would typically produce the largest impact dispersion area.

Once an applicant determines the impact dispersion radii, the applicant must plot each impact dispersion area on a map in accordance with the requirements of paragraph (b). This is shown in figure D-l. An applicant may then determine if flight azimuths exist which do not affect populated areas. If all potential flight azimuths contain impact dispersion areas which encompass populated areas, then the FAA would require an E_c estimation of risk.

Public Risk E_c Estimation

The FAA will approve a launch point for suborbital launch vehicles if there exists a set of impact dispersion areas for a representative launch vehicle in which the sum of risk to the public does not exceed the FAA's acceptable risk threshold. An overflight exclusion zone must contain no people. If a populated area is present within the impact dispersion areas, the proposed rules require an applicant to estimate the risk to the public posed by possible stage impact. An applicant must then determine whether its estimated risk satisfies the FAA requirement of an E_c of no more than 30×10^{-6}. The E_c estimation is performed by computing the sum of the risk for the impact of each stage and accounting for each populated area located within a 5σ dispersion of an impact point. The equation used to accomplish this is the same as that used in the impact probability computation in appendix C. Unlike, however, the method in appendix C, which accounts for an impact due to a failure, the probability of a stage impact occurring is $P_s = 1\text{-}P_f$, where P_s is the probability of success, and P_f is the probability of failure. The FAA proposes, for the purposes of the launch site location review, a constant of 0.98 for the probability of success for unguided suborbital launch vehicles. The probability of success is used in place of P_f in calculating both the cross-range and downrange probability of impact.

The proposed location review for launch points intended for the launch of unguided suborbital launch vehicles differs from the approach proposed for reviewing the location of launch points intended for the launch of guided orbital and suborbital launch vehicles. In analyzing whether risk remains at acceptable levels, E_c equations in appendix D rely on the probability of success rather than the probability of failure. The use of stage impact probability, typified as the probability of success (P_s), for suborbital launch vehicles is necessary because stage impacts are high probability events which occur near the launch point with dispersions which may overlap or be adjacent to the launch point. The difference between the methods of appendices A, B and C and that proposed in appendix D reflects the fundamental differences between the likely dominant source of risk to the public guided and unguided vehicles and the methods that have been developed for guarding public safety against the risks created by each type of vehicle. In other words, the methods for defining impact dispersion areas and for conducting an impact risk assessment for an unguided vehicle are premised on the risks posed by a successful flight, that is, the planned deposition of stages and debris. In contrast, the methodology for developing a flight corridor and associated risk methodology for guided vehicles assumes that the likely major source of risk to the public arises out of a failure of a mission and the ensuing destruction of the vehicle. Failures are less probable and debris impacts are spread throughout a flight trajectory.

The high degree of success recorded for unguided launch vehicles renders

[47] These vehicles include Nikc Orion. Black Brant IX. Black Brant XI. and Black Brant XII. They are representative of the current launch vehicle inventory and should approximate any proposed new launch vehicle.

the probability of success the greater source of risk. Because of their relative simplicity of operation, the failure rate, over time, for unguided launch vehicles is between one and two percent. At this level of reliability, the FAA believes that its primary focus of concern for assessing the safety of a launch site should be the more likely event, namely, the public's exposure to the planned impact of vehicle stages and other vehicle components, such as fairings. rather than the risk posed by exposure to debris resulting from a failure. Success is the high risk event. Although failure rates are low for unguided launch vehicles, their spent stages have large impact dispersions. Moreover, the FAA's proposed impact dispersion area estimations generally produce impact dispersion areas large enough to encompass most of the populations exposed to a possible failure as well as to a nominal flight, thus ensuring the inclusion of any large, densely populated area in the analysis. Thus, all but a small percentage of populated area will be analyzed to some extent, albeit using impact probabilities based on success. This fact plus a multiplier of five should provide a reasonable, conservative estimation of the risks associated with the launch point.

This is true of unguided sub-orbital launch vehicles because their impact dispersions are much larger than those for guided vehicles and they occur closer to the launch point.

In appendix D, the FAA assumes that the stage impact dispersion in both the downrange and cross range directions are equal. This is a valid assumption for suborbital launch vehicle rockets because their trajectories produce near circular dispersions. NASA data on sounding rocket impact dispersion supports this conclusion.

The impact dispersion area is based on a 5 σ dispersion. Appendix D uses the effective casualty area data, the table D-l, which contains information similar to appendix C, table C-3. This data represents the estimation of the area produced by both suborbital launch vehicle inert pieces. The baseline risk estimation approach in appendix D has the applicant calculate the probability of impact for each populated area, and then determining an E_c value for each populated area. To obtain the estimated E_c for an entire impact dispersion area, the applicant adds the E_c results for each populated area. If the population within the impact dispersion area is relatively small, an applicant may wish to conduct a less rigorous analysis by making conservative assumptions. Appendix D offers the option of analyzing a worst-case impact dispersion area for those where such an approach might save time and analysis, similar to the approach in appendix C.

Paperwork Reduction Act

This proposal contains information collection requirements. As required by the Paperwork Reduction Act of 1995 (44 U.S.C. section 3507(d)), the Department of Transportation has submitted the information collection requirements associated with this proposal to the Office of Management and Budget for its review.

Title: Licensing and Safety Requirements for Operation of a Launch Site.

The FAA is proposing to amend its commercial space transportation licensing regulations to add licensing and safety requirements for the operation of a launch site. In the past, commercial launches have occurred principally at federal launch ranges under safety procedures developed by federal launch range operators. To enable the development and use of launch sites that are not operated by a federal launch ranges, rules are needed to establish specific licensing and safety requirements for operating a launch site, whether that site is located on or off of a federal launch range. These proposed rules would provide licensed launch site operators with licensing and safety requirements to protect the public from the risks associated with activities at launch site.

The required information will be used to determine whether applicants satisfy requirements for obtaining a license to protect the public from risks associated with operations at a launch site. The information to be collected includes data required for performing launch site location analyses. A launch site license is valid for a period of five years, and it is assumed that all licenses would be renewed after five years. The frequency of required submissions, therefore, will depend upon the number of prospective launch site operators seeking a license and the renewal of site licenses.

The respondents are all licensees authorized to conduct licensed launch site activities. It is estimated that there will be two respondents annually at 796 hours per respondent for an estimated annual burden hours of 1592 hours.

The agency is soliciting comments to (1) evaluate whether the proposed collection of information is necessary for the proper performance of the functions of the agency, including whether the information will be practical utility; (2) evaluate the accuracy of the agency's estimate of the burden: (3) enhance the quality. utility, and, clarity of the information to be collected; and (4) minimize the burden of the collection of information on those who are to respond, including through the use of appropriate automated, electronic, mechanical, or other technological collection techniques or other forms of information technology (for example, permitting electronic submission of responses).

Individuals and organizations may submit comments on the information collection requirement by August 24, 1999, and should direct them to the address listed in the **ADDRESSES** section of this document.

According to the regulations implementing the Paperwork Reduction Act of 1995, (5 CFR 1320.8(b)(2)(vi)), an agency may not conduct or sponsor, and a person is not required to respond to a collection of informaiton unless it displays a currently valid OMB control number. The OMB control number for this information collection will be published in the **Federal Register** after it is approved by the Office of Management and Budget.

Regulatory Evaluation Summary

This section summarizes the full regulatory evaluation prepared by the FAA that provides more detailed estimates of the economic consequences of this regulatory action. This summary and the full evaluation quantify, to the extent practicable, estimated costs to the private sector, consumers, Federal, State and local governments, as well as anticipated benefits. This evaluation was conducted in accordance with Executive Order 12866, which directs that each Federal agency can propose or adopt a regulation only upon a reasoned determination that the benefits of the intended regulation justify the costs. This document also includes an initial regulatory flexibility determination required by the Regulatory Flexibility Act of 1980, and an international trade impact assessment, required by the Office of Management and Budget. This proposal is not considered a significant regulatory action under section 3(f) of Executive Order 12866. In addition, under Regulatory Policies and Procedures of the Department of Transportation (44 FR 11034; February 26, 1979). this proposal is considered significant because there is substantial public interest in the rulemaking.

The Federal Aviation Administration proposes to amend its commercial space licensing regulations to add licensing requirements for the operation of a launch site. The proposal would provide launch site operators with licensing and operating requirements to protect the public from the risks

associated with operations at a launch site. The FAA currently issues licenses to launch site operators on a case-by case-approach. Elements of that approach are reflected in the guidelines, "Site Operators License Guidelines for Applicants." which describe the information that applicants provide the FAA for a license to operate a launch site. The FAA's interpretation and implementation of the guidelines constitute another element of the case-by-case approach and additional elements, such as policy review, not reflected in the guidelines.

The proposal represents quantifiable changes in costs compared to the guidelines (current practice) in the following two areas. They are the launch site location review and approval and the launch site operations review and approval. The FAA has estimated the costs and cost savings of these changes under two different cost scenarios over a IO-year period discounted at 7 percent in 1997 dollars. The total IO-year undiscounted cost savings is estimated to be between $84,000 and $ 160,000 (or between $53,000 and $105.000, discounted). The most burdensome cost scenario (where net cost savings is the least) to the industry would result in the costs to the launch site operators of $3,000 (or $2.000. discounted) for the launch site location reviews and approval provisions and a cost savings of $11,000 (or 58.000. discounted) for the launch site operations review and approval provisions. Although there would be no cost impact to the FAA, there would be a cost savings to the FAA from the most burdensome cost scenario of $104,000 or $70,000 discounted.

There are significant nonquantifiable benefits in two areas. First, the proposal eliminates overlapping responsibilities. Second, the proposal provides increased details and specificity, which are not present in the guidelines.

Regulatory Flexibility Determination

The Regulatory Flexibility Act of 1980 establishes "as a principle of regulatory issuance that agencies shall endeavor, consistent with the objective of the rule and of applicable statues, to fit regulatory and informational requirements to the scale of the business, organizations, and governmental jurisdictions subject to regulation." To achieve that principal, the Act requires agencies to solicit and consider flexible regulatory proposals and to explain the rational for their actions. The Act covers a wide-range of small entities, including small businesses, not-for-profit organizations and small governmental jurisdictions.

Agencies must perform a review to determine whether a proposed or final rule will have a significant economic impact on a substantial number of small entities. If the determination is that it will, the agency must prepare a regulatory flexibility analysis (RFA) as described in the Act. However, if an agency determines that a proposed or final rule is not expected to have a significant economic impact on a substantial number of small entities, section 605(b) of the 1980 act provides that the head of the agency must so certify and an RFA is not required. The certification must include a statement providing the factual basis for this determination, and the reasoning should be clear.

The FAA conducted the required review of this proposal and determined that it would not have a significant economic impact on a substantial number of small entities. Accordingly, pursuant to the regulatory Flexibility Act, 5 U.S.C. 605(b). the Federal Aviation Administration certifies that this rule will not have a significant economic impact on a substantial number of small entities.

Potentially Affected Entities

Entities who are licensed, or have begun the licensing process, were contacted to determine their size and to gain insight into the impacts of the proposed regulations on the licensing process. Spaceport Florida Authority (SFA), Spaceport Systems International, L.P. (SSI), the Virginia Commonwealth Space Flight Authority (VCSFA) and the Alaska Aerospace Development Corporation (AADC) are all licensed to operate launch sites. The New Mexico Office of Space Commercialization (NMOSC) is mentioned briefly below although it is only in the pre-application consultation phase.

The Virginia Commonwealth Space Flight Authority (VCSFA) is a not-for-profit subdivision of the Commonwealth of Virginia, responsible for oversight of the activities of the Virginia Commercial Space Flight Center (VCSFC). The VCSFC is located within the boundaries of the Wallops Flight Facility (WFF). As a subdivision of the Commonwealth of Virginia, the VCSFA is empowered by the Acts of the General Assembly to do all things necessary to carry out its mission of stimulating economic growth and education through commercial aerospace activities.

The Spaceport Florida Authority (SFA) was created by Florida's Governor and Legislature as the nation's first state government space agency. The authority was established to develop space-related enterprise, including launch activities, industrial development and education-related projects. SFA operate Spaceport Florida (SPF), located on Cape Canaveral Air Station.

Launch site operator California Spaceport is located on Vandenberg Air Force Base. The launch site is operated and managed by Spaceport Systems International, L.P. who is in partnership with ITT Federal Services Corporation (ITT FSC). ITT FSC is one of the largest U.S.-based technical and support services contractors in the world.

The Kodiak Launch Complex is being built by the Alaska Aerospace Development Corporation. AADC is a public corporation created by the State of Alaska to develop aerospace related economic and technical opportunities for the state.

The Southwest Regional Spaceport (SRS) is to be operated by the New Mexico Office of Space Commercialization (NMOSC). The NMOSC is a division of the State's New Mexico Economic Development Department. Commencement of space flight operations is not expected until early the next decade.

Definition of Small Entities

The Small Business Administration has defined small business entities relating to space vehicles (SIC codes 3761, 3764 and 3769) as entities comprising fewer than 1000 employees. Although the above mentioned entities have fewer than 1000 employees in their immediate segment of the business, they are affiliated with/or funded by state governments and large parent companies. The VCSFA is a not-for-profit subdivision of the Commonwealth of Virginia; the SFA is a government space agency: the SSI is affiliated with ITT FSC; and AADC is a government sponsored corporation.

Under 5 U.S.C. 605. the FAA concludes that this proposal would impose little or no additional cost on this industry and certifies that it will not have a significant economic impact on a substantial number of small entities. The FAA nevertheless requests comments on any potential impacts associated with this proposal.

International Trade Impact Assessment

Licensing and Safety Requirements for Operation of a Launch Site (14 CFR part 420) would not constitute a barrier to international trade, including the export of US. goods and services out of the United States. The proposal affects operation of launch sites that are currently located or being proposed within the United States or operated by U.S. citizens.

The proposal is not expected to affect the trade opportunities for U.S. firms doing business overseas or for foreign firms doing business in the United States. The FAA requests information on the effect that this proposal would have on international trade.

Federalism Implications

The regulations proposed herein will not have substantial direct effects on the states, on the relationship between the national government and the states, or on the distribution of power and responsibilities among the various levels of government. Therefore, in accordance with Executive Order 12612, it is determined that this proposal would not have sufficient federalism implications to warrant the preparation of a Federalism Assessment.

Unfunded Mandates Reform Act Assessment

Title II of the Unfunded Mandates Reform Act of 1995 (UMRA), enacted as Pub. L. 104-4 on March 22, 1995, requires each Federal agency, to the extent permitted by law, to prepare a written assessment of the effects of any Federal mandate in a proposed or final agency rule that may result in the expenditure by State, local, and tribal governments, in the aggregate, or by the private sector, of $100 million or more (adjusted annually for inflation) in any one year. Section 204(a) of the UMRA. 2 U.S.C. 1534(a), requires the Federal agency to develop an effective process to permit timely input by elected officers (or their designees) of State, local, and tribal governments on a proposed "significant intergovernmental mandate." A "significant intergovernmental mandate" under the UMRA is any provision in a Federal agency regulation that will impose an enforceable duty upon State, local, and tribal governments, in the aggregate, of $100 million (adjusted annually for inflation) in any one year. Section 203 of the UMRA, 2 U.S.C. 1533, which supplements section 204 (a), provides that before establishing any regulatory requirements that might significantly or uniquely affect small governments, the agency shall have developed a plan that, among other things, provides for notice to potentially affected small governments, if any. and for a meaningful and timely opportunity to provide input in the development of regulatory proposals.

This proposed does not meet the cost thresholds described above. Furthermore, this proposal would not impose a significant cost or uniquely affect small governments. Therefore, the requirements of Title II of the Unfunded Mandates Reform Act of 1995 do not apply.

Environmental Assessment

FAA Order 1050.1D defines FAA actions that may be categorically excluded from preparation of a National Environmental Policy Act (NEPA) environmental assessment (EA) or environmental impact statement (EIS). In accordance with FAA Order 1050. 1D, appendix 4, paragraph 4(i), regulatory documents which cover administrative or procedural requirements qualify for a categorical exclusion. Proposed sections in subpart B of part 420 would require an applicant to submit sufficient environmental information for the FAA to comply with NEPA and other applicable environmental laws and regulations during the processing of each license application. Accordingly, the FAA proposes that this rule qualifies for a categorical exclusion because no significant impacts to the environment are expected to result from the finalization or implementation of its administrative provisions for licensing.

Energy Impact

The energy impact of the rulemaking action has been assessed in accordance with the Energy Policy and Conservation Act (EPCA) and Pub. L. 94-163. as amended (42 U.S.C. 6362). It has been determined that it is not a major regulatory action under the provisions of the EPCA.

List of Subjects in 14 CFR 417 and 420

Confidential business information. Environmental protection, Organization and functions, Reporting and recordkeeping requirements, Rockets, Space transportation and exploration,

The Amendment

In consideration of the foregoing, the Federal Aviation Administration amends Chapter III of Title 14 of the Code of Federal Regulations to read as follows:

PART 417-[REMOVED AND RESERVED]

1. Part 4 17 is removed and reserved.

2. Subchapter C of Chapter III, title 14. Code of Federal Regulations, is amended by adding a new part 420 to read as follows:

PART 420—LICENSE TO OPERATE A LAUNCH SITE

Subpart A-General

sec.

420.1 Scope.
420.3 Applicability.
420.5 Definitions.
420.6-420.14 [Reserved]

Subpart B-Criteria and information Requirements for Obtaining a License

420.15 Information requirements.
420.17 Bases for issuance of a license.
420.19 Launch site location review.
420.21 Launch site criteria for expendable launch vehicles.
420.23 Launch site location review for unproven launch vehicles.
420.31 Explosive site plan.
420.33 Handling of solid propellants,
420.35 Storage or handling of liquid propellants.
420.37 Solid and liquid propellants located together.
420.38-420.40 [Reserved]

Subpart C-License Terms and Conditions

420.41 License to operate a launch site-general.
420.43 Duration.
420.45 Transfer of a license to operate a launch site.
420.47 License modification.
420.49 Compliance monitoring.

Subpart D-Responsibilities of a Licensee

420.51 Responsibilities-general.
420.53 Control of public access.
420.55 Scheduling of launch site operations.
420.57 Notifications.
420.59 Launch site accident investigation plan.
420.61 Records.
420.63 Explosives.
Appendix A to Part 420-Method for Defining a Flight Corridor
Appendix B to Part 420-Method for Defining a Flight Corridor
Appendix C to Part 420-Risk Analysis
Appendix D to Part 420—Impact Dispersion Areas and Casualty Expectancy Estimate for Unguided Suborbital Launch Vehicles
Appendix E to Part 420-Tables for Explosive Site Plan

Authority: 49 U.S.C. 70101-70121.

Subpart A-General

§ 420.1 Scope.

This part prescribes the information and demonstrations that must be submitted as part of a license application, the bases for license approval, license terms and conditions, and post-licensing requirements with which a licensee shall comply to remain licensed. Requirements for preparing a license application are also contained in part 4 13 of this subchapter.

9420.3 Applicability.

This part applies to any person seeking a license to operate a launch site or to a person licensed under this part.

§ 420.5 Definitions.

For the purpose of this part,

Ballistic coefficient means the weight of an object divided by the quantity product of the coefficient of drag of the object and the area of the object.

Compatibility means the chemical property of materials that may be located together without increasing the probability of an accident or. for a given quantity, the magnitude of the effects of such an accident.

Debris dispersion radius (D_{max}) means the estimated maximum distance from a launch point that debris travels given a worst-case launch vehicle failure and flight termination at 10 seconds into flight.

Divison 1.3 explosive means an explosive as defined in 49 CFR 173.50.

Downrange area means a portion of a flight corridor beginning where a launch area ends and ending 5,000 nautical miles from the launch point for an orbital launch vehicle, and ending with an impact dispersion area for a guided sub-orbital launch vehicle.

E,F,G coordinate system means an orthgonal, Earth-fixed, geocentric, right-handed system. The origin of the coordinate system is at the center of an ellipsoidal earth model. The E-axis is positive directed through the Greenwich meridian. The F-axis is positive directed through 90 degrees east longitude. The EF-plane is coincident with the ellipsoidal Earth model's equatorial plane. The G-axis is normal to the EF-plane and positive directed through the north pole.

E,N,U. coordinate system means an orthogonal, Earth-fixed, topocentric. right-handed system. The origin of the coordinate system is at a launch point. The E-axis is positive directed east. The N-axis is positive directed north. The EN-plane is tangent to an ellipsoidal Earth model's surface at the origin and perpendicular to the geodetic vertical. The U-axis is normal to the EN-plane and positive directed away from the Earth.

Effective casualty area (A,) means the aggregate casualty area of each piece of debris created by a launch vehicle failure at a particular point on its trajectory. The effective casualty area for each piece of debris is the area within which 100 percent of the unprotected population on the ground are assumed to be a casualty, and outside of which 100 percent of the population are assumed not to be a casualty. This area is based on the characteristics of the debris piece including its size, the path angle of its trajectory, impact explosions, the size of a person, and debris skip, splatter, and bounce.

Explosive means any chemical compound or mechanical mixture that, when subjected to heat, impact, friction, detonation or other suitable initiation, undergoes a rapid chemical change that releases large volumes of highly heated gases that exert pressure in the surrounding medium. The term applies to materials that either detonate or deflagrate.

Explosive equivalent means a measure of the blast effects from explosion of a given quantity of material expressed in terms of the weight of trinitrotoluene (TNT) that would produce the same blast effects when detonated.

Explosive hazard facility means a facility at a launch site where solid or liquid propellant is stored or handled.

Flight azimuth means the initial direction in which a launch vehicle flies relative to true north expressed in degrees-decimal-degrees.

Flight corridor means an area on the earth's surface estimated to contain the majority of hazardous debris from nominal and non-nominal flight of an orbital or guided suborbital launch vehicle.

Guided suborbital launch vehicle means a suborbital rocket that employs an active guidance system.

Impact dispersion area means an area representing and estimated five standard deviation dispersion about a nominal impact point of an intermediate or final stage of a suborbital launch vehicle.

Impact dispersion factor means a constant used to estimate, using a stage apogee, a five standard deviation dispersion about a nominal impact point of an intermediate or final stage of a suborbital launch vehicle.

Impact dispersion radius (R_i) means a radius that defines an impact dispersion area.

Impact range means the distance between a launch point and the impact point of a suborbital launch vehicle stage.

Impact range factor means a constant used to estimate, using the stage apogee, the nominal impact point of an intermediate or final stage of a suborbital launch vehicle.

Instantaneous impact point (IIP means an impact point, following thrust termination of a launch vehicle, calculated in the absence of atmospheric drag effects.

Instantaneous impact point (UP) range *rate* means a launch vehicle's estimated IIP velocity along the Earth's surface.

Intraline distance means the minimum distance permitted between any two explosive hazard facilities in the ownership, possession or control of one launch site customer.

Launch area means, for a flight corridor defined using appendix A to this part, the portion of a flight corridor from the launch point to a point 100 nautical miles in the direction of the flight azimuth. For a flight corridor defined using appendix B to this part, a launch area is the portion of a flight corridor from the launch point to the enveloping line enclosing the outer boundary of he last debris dispersion circle.

Launch point means a point on the Earth from which the flight of a launch vehicle begins, and is defined by its geodetic latitude, longitude and height on an ellipsoidal Earth model.

Launch site accident means an unplanned event occurring during a ground activity at a launch site resulting in a fatality or serious injury (as defined in 49 CFR 830.2) to any person who is not associated with the activity, or any damage estimated to exceed $25,000 to property not associated with the activity.

Net explosive weight (NEW) means the total weight, expressed in pounds, of explosive material or explosive equivalency contained in an item.

Nominal means, in reference to launch vehicle performance, trajectory, or stage impact point, a launch vehicle flight where all launch vehicle aerodynamic parameters are as expected, all vehicle internal and external systems perform as planned, and there are no external perturbing influences (e.g., winds) other than atmospheric drag and gravity.

Nominal trajectory means the position and velocity components of a nominally performing launch vehicle relative to an x, y, z coordinate system, expressed in x, y, z, $\dot{x}$, $\dot{y}$, $\dot{z}$.

Overflight dwell time means the period of time it takes for a launch vehicle's IIP to move past a populated area. For a given populated area, the overflight dwell time is the time period measured along the nominal trajectory IIP ground trace from the time point whose normal with the trajectory intersects the most uprange part of the populated area to the time point whose normal with the trajectory intersects the most downrange part of the populated area.

Overflight exclusion zone means a portion of a flight corridor which must remain clear of the public during the flight of a launch vehicle.

Populated area means a land area with population.

Population density means the number of people per unit area in a populated area.

Position data means data referring to the current position of a launch vehicle with respect to flight time expressed through the x, y, z coordinate system.

Public area means any area outside a hazard area and is an area that is not in the possession, ownership or other control of a launch site operator or of a

launch site customer who possess, owns or otherwise controls that hazard area.

Public area distance means the minimum distance permitted between a public area and an explosive hazard facility.

Unguided sub-orbital launch vehicle means a sub-orbital rocket that does not have a guidance system.

x,y,z coordinate system means an orthogonal, Earth-fixed, topocentric, right-handed system. This origin of the coordinate system is at a launch point. The x-axis coincides with the initial launch azimuth and is positive in the downrange direction. The y-axis is positive to the left looking downrange. The xy-plane is tangent to the ellipsoidal earth model's surface at the origin and perpendicular to the geodetic vertical. The z-axis is normal to the xy-plane and positive directed away from the earth.

$\varphi_0, \lambda_0, h_0$ means a latitude, longitude, height system where φ_0 is the geodetic latitude of a launch point, λ_0 is the east longitude of the launch point, and h_0 is the height of the launch point above the reference ellipsoid. φ_0 and λ_0 are expressed in degrees-decimal-degrees.

§§ 420.6–420.14 [Reserved]

Subpart B-Criteria and Information Requirements for Obtaining a License

3420.15 information requirements.

(a) An applicant shall provide the FAA with information for the FAA to analyze the environmental impacts associated with operation of a proposed launch site. The information provided by an applicant must be sufficient to enable the FAA to comply with the requirements of the National Environment Policy Act, 42 U.S.C. 4321 et *seq.* (NEPA). the Council on Environmental Quality Regulations for Implementing the Procedural Provisions of NEPA, 40 CFR parts 1500-l 508, and the FAA's Procedures for Considering Environmental Impacts, FAA Order 1050. 1D. An applicant shall submit environmental information concerning a proposed launch site not covered by existing environmental documentation and other factors as determined by the FAA.

(b) An applicant shall:

(1) Provide the information necessary to demonstrate compliance with §§ 420.19, 420.21, and 420.23. For launch sites analyzed for expendable launch vehicles, an applicant shall provide the following information:

(i) A map or maps showing the location of each launch point proposed, and the flight azimuth, overflight exclusion zone, flight corridor, and each impact dispersion area for each launch point:

(ii) Each launch vehicle type and any launch vehicle class proposed for each launch point:

(iii) Each month and any percent wind data used in the analysis:

(iv) Any launch vehicle apogee used in the analysis:

(v) If populated areas are located within an overflight exclusion zone, a demonstration that there are times when the public is not present or that the applicant has an agreement in place to evacuate the public from the overflight exclusion zone during a launch:

(vi) Each populated area located within a flight corridor or impact dispersion area:

(vii) The estimated casualty expectancy calculated for each populated area within a flight corridor or impact dispersion area: and

(vii) The estimated casualty expectancy for each flight corridor or set of impact dispersion areas.

(2) Identify foreign ownership of the applicant, as follows:

(i) For a sole proprietorship or partnership, all foreign owners or partners;

(ii) For a corporation, any foreign ownership interest of 10 percent or more; and

(iii) For a joint venture, association, or other entity, any foreign entities participating in the entity.

(3) Provide an explosive site plan in accordance with §§ 420.31, 420.33, 420.35 and 420.37.

(c) An applicant shall provide the information necessary to demonstrate compliance with the requirements of §§ 420.53, 420.55, 420.57, 420.59 and **420.63.**

(d) An applicant who is proposing to locate a launch site at an existing launch point at a federal launch range is not required to comply with paragraph (b) (1) of this section if a launch vehicle of the same type and class as proposed for the launch point has been safely launched from the launch point. An applicant who is proposing to locate a launch site at a federal launch range is not required to comply with paragraph (b) (3) of this section.

§ 420.17 Bases for issuance of a license.

(a) The FAA will issue a license under this part when the FAA determines that:

(1) The application provides the information required under § 420.15;

(2) The National Environmental Policy Act review is completed:

(3) The launch site location meets the criteria provided in §§ 420.19, 420.2 1, and 420.23;

(4) The explosive site plan meets the criteria provided in §§ 420.31, 420.33, 420.35 and 420.37;

(5) The application demonstrates that the applicant shall satisfy the requirements of subpart D of this part: and

(6) Issuing a license would not jeopardize foreign policy or national security interests of the United States.

(b) The FAA advises an applicant, in writing, of any issue arising during an application review that would lead to denial. The applicant may respond in writing, submit additional information, or revise its license application.

§ 420.19 Launch site location review.

(a) To gain approval for a launch site location, an applicant shall demonstrate that for at least one type of expendable launch vehicle-orbital, guided sub-orbital or unguided sub-orbital-or a reusable launch vehicle, a flight corridor or set of impact dispersion areas exists that does not exceed an estimated expected average number of 0.00003 casualties (E,) to the collective member of the public exposed to hazards from any one flight ($E_c \leq 30 \times 10^{-6}$). For an orbital expendable launch vehicle, an applicant shall choose a weight class as defined in table 1.

(b) For a guided orbital or guided sub-orbital expendable launch vehicle, an applicant shall define a flight corridor using one of the methodologies provided in appendices A or B to this part. If a defined flight corridor contains a populated area, the applicant shall use appendix C to this part to estimate the casualty expectation associated with the flight corridor.

(c) For an unguided sub-orbital expendable launch vehicle, an applicant shall define impact dispersion areas as provided by appendix D to this part. If a defined impact dispersion area contains any populated areas, the applicant shall use appendix D to this part to estimate the casualty expectation associated with the set of impact dispersion areas.

(d) For a reusable launch vehicle, an applicant shall define a flight corridor that the applicant estimates to contain the hazardous debris from nominal and non-nominal flight of a reusable launch vehicle. If the defined flight corridor contains a populated area, the applicant shall estimate the casualty expectation associated with a reusable launch vehicle mission. An applicant shall demonstrate that the estimated expected average number of casualties (E,) to the collective member of the public exposed to hazards from any one mission is less than 0.00003. The FAA will evaluate the adequacy of the flight corridor and

casualty expectancy analysis on a case-by-case basis.

§ 420.21 Launch site criteria for expendable launch vehicles.

(a) For each launch point proposed for expendable launch vehicles, an applicant shall use each type of expendable launch vehicle proposed to be launched from that launch point as the basis of its demonstration of compliance with the criteria provided in paragraph (b) of this section and for the analyses provided in appendices A through D to this part.

(b) For each type of expendable launch vehicle selected under paragraph (a) of this section, the distance from the proposed launch point to the launch site boundary must be at least as great as the minimum distance listed in table 2 for that type and any class of launch vehicle.

§ 420.23 Launch site location review for unproven launch vehicles.

The FA will evaluate the adequacy of a launch site location for unproven launch vehicles including all new launch vehicles, whether expendable or reusable, on a case-by-case basis.

TABLE 1 TO § 420.21.—ORBITAL LAUNCH VEHICLE CLASSES BY PAYLOAD WEIGHT (LBS)

	Orbital Launch Vehicles			
100 nm orbit	Small	Medium	Medium large	Large
28 degrees inclination [1]	1440	>4400 to ≤11100	>11100 to ≤18500	>18500
90 degrees inclination [2]	13300	>3300 to ≤8400	>8400 to ≤15000	>15000

[1] 28 degrees inclination orbit from a launch point at 28 degrees latitude.
[2] 90 degrees inclination orbit.

TABLE 2 TO § 420.21.—MINIMUM DISTANCE FROM LAUNCH POINT TO LAUNCH SITE BOUNDARY (FEET)

Orbital launch vehicles				Suborbital launch vehicles	
Small	Medium	Medium large	Large	Guided suborbital launch vehicle	Unguided suborbital launch vehicle
7300	9300	10600	13000	8000	1600

5420.13 Explosvie site plan.

(a) An applicant shall submit an explosive site plan that establishes compliance with §§ 420.33, 420.35, and 420.37. The explosive site plan shall include:

(1) A scaled map that shows the location of all proposed explosive hazard facilities at the proposed launch site and that shows actual and minimal allowable distances between each explosive hazard facility and all other explosive hazard facilities and each public area, including the launch site boundary.

(2) A listing of the maximum quantities of liquid and solid propellants to be located at each explosive hazard facility, including the class and division for each solid propellant and the hazard and compatibility group for each liquid propellant: and

(3) A description of each activity to be conducted in each explosive hazard facility.

(b) An applicant applying for a license to operate a launch site at a federal launch range need not submit an explosive site plan to the FAA.

5420.33 Handling of solid propellants.

(a) An applicant shall determine the total quantity of solid propellant explosives by class and division in each explosive hazard facility where solid propellants will be handled. The total quantity of explosives in an explosive hazard facility shall be measured as the net explosive weight (NEW) of the solid propellants. When division 1.1 explosives, designed to be installed on launch vehicles and designed not to detonate division 1.3 components, are located with division 1.3 explosives, that total quantity of explosives shall be the NEW of the division 1.3 components.

(b) An applicant shall separate each explosive hazard facility where solid propellants will be handled from all other explosive hazard facilities, each public area and the launch site boundary by a distance no less than those provided for each quantity in appendix E. table E- 1. An applicant shall employ no less than the applicable public area distance to separate an explosive hazard facility from each public area and from the launch site boundary. An applicant shall employ no less than an intraline distance to separate an explosive hazard facility from all other explosive hazard facilities that will be used by a single customer. An applicant may use linear interpolation for NEW quantities between table entries. For every explosive hazard facility where solid propellants in quantities greater than 1 ,000,000 pounds will be handled, an applicant shall separate the explosive hazard facility from all other explosive hazard facilities, each public area and the launch site boundary in accordance with the minimum separation distances derived from the following relationships:

(1) For a public area distance:

$D = 8W^{1/3}$

where "D" equals the minimum separation distance in feet and "W" equals the NEW of propellant.

(2) For an intraline distance:

$D = 5W^{1/3}$

where "D" equals the minimum separation distance in feet and "W" equals the NEW of propellant.

(c) An applicant shall measure separation distance from the closest debris or explosive hazard source in an explosive hazard facility.

$420.35 Storage or handling of liquid propellants.

(a) For an explosive hazard facility where liquid propellants are handled or stored, an applicant shall determine the total quantity of liquid propellant and, if applicable pursuant to paragraph (a) (3) of this section, the explosive equivalent of liquid propellant in each explosive hazard facility in accordance with the following:

(1) The quantity of liquid propellant in a tank, drum, cylinder, or other container is the net weight in pounds of the propellant in the container. The determination of quantity shall include any liquid propellant in associated piping to any point where positive

means are provided for interrupting the flow through the pipe, or interrupting a reaction in the pipe in the event of a mishap.

(2) Where two or more containers of compatible liquid propellants will be handled or stored together in an explosive hazard facility, the total quantity of propellant to determine the minimum separation distance between the explosive hazard facility and all other explosive hazard facilities and each public area shall be the total quantity of liquid propellant in all containers. unless:

(i) The containers are separated one from the other by the appropriate distance as provided in paragraph (b)(2) of this section; or

(ii) The containers are subdivided by intervening barriers, such as diking, that prevent mixing.

(iii) If paragraph (a) (2) (i) or (ii) of this section apply, an applicant shall use the quantity of propellant requiring the greatest separation distance pursuant to paragraph (b) of this section to determine the minimum separation distance behveen the explosive hazard facility and all other explosive hazard facilities and each public area.

(3) Where two or more containers of incompatible liquid propellants will be handled or stored together in an explosive hazard facility, an applicant shall determine the explosive equivalent in pounds of the combined liquids, using the formulas provided in appendix E. table E-2, to determine the minimum separation distance between the explosive hazard facility and other explosive hazard facilities and public areas unless the containers are separated one from the other by the appropriate distance as determined in paragraph (b) (3) of this section. An applicant shall then use the quantity of liquid propellant requiring the greatest separation distance to determine the minimum separation distance between the explosive hazard facility and all other explosive hazard facilities and each public area.

(4) An applicant shall convert quantities of liquid propellants from gallons to pounds using the conversion factors provided in appendix E, table E-3 and the following equation:

Pounds of propellant = gallons x density of propellant (pounds per gallon).

(b) An applicant shall use appendix E, table E-3 to determine hazard and compatibility groups and shall separate liquid propellants from each other and from each public area using distances no less than those provided in appendix E. tables E-4 through E-7 in accordance with the following:

(1) An applicant shall measure minimum separation distances from the hazard source in an explosive hazard facility, such as a container, building, segment, or positive cutoff point in piping, closest to each explosive hazard facility.

(2) An applicant shall measure the minimum separation distance between compatible liquid propellants using the "intragroup and compatible" distance for the propellant quantity and hazard group that requires the greater distance prescribed by appendix E, tables E-4, E-5, and E-6.

(3) An applicant shall measure the minimum separation distance between liquid propellants of different compatibility groups using the "public area and incompatible" distance for the propellant quantity and hazard group that requires the greater distance provided in appendix E. tables E-4, E-5, and E-6, unless the propellants of different compatibility groups are subdivided by intervening barriers that prevent mixing. If such barriers are present, the minimum separation distance shall be the "intragroup and compatible" distance for the propellant quantity and group that requires the greater distance provided in appendix E, tables E-4, E-5, and E-6.

(4) An applicant shall separate liquid propellants from each public area using a distance no less than the "public area and incompatible" distance provided in appendix E, tables E-4, E-5, and E-6.

(5) An applicant shall separate each explosive hazard facility that will contain liquid propellants where explosive equivalents apply pursuant to paragraph (a) (3) of this section from all other explosive hazard facilities of a single customer using the intraline distance provided in appendix E, table E-7, and from each public area using the public area distance provided in appendix E, table E-7.

$420.37 Solid and liquid propellants located together.

An applicant proposing an explosive hazard facility where solid and liquid propellants are to be located together shall determine the minimum separation distances between the explosive hazard facility and other explosive hazard facilities and public areas in accordance with the following. An applicant shall determine the minimum separation distances between the explosive hazard facility and all other explosive hazard facilities and public areas required for the solid propellants in accordnace with § 420.33. An applicant shall then apply the greater of the separation distances determined by the liquid propellant alone or the solid propellant alone.

§§ 420.38–420.40 [Reserved]

Subpart C-License Terms and Conditions

§420.41 License to operate a launch site—general.

(a) A license to operate a launch site authorizes a licensee to operate a launch site in accordance with the representations contained in the licensee's application, with terms and conditions contained in any license order accompanying the license, subject to the licensee's compliance with 49 U.S.C. subtitle IX, ch. 701 and this chapter.

(b) A license to operate a launch site authorizes a licensee to offer its launch site to a launch operator for each launch point for the type and any class of launch vehicle identified in the license application and upon which the licensing determination is based.

(c) Issuance of a license to operate a launch site does not relieve a licensee of its obligation to compy with any other laws or regulations, nor does it confer any proprietary, property, or exclusive right in the use of airspace or outer space.

§420.43 Duration.

A license to operate a launch site remains in effect for five years from the date of issuance unless surrendered, suspended, or revoked before the expiration of the term and is renewable upon application by the licensee.

9420.45 Transfer of a license to operate a launch site.

(a) Only the FAA may transfer a license to operate a launch site.

(b) The FAA will transfer a license to an applicant who has submitted an application in accordance with 14 CFR part 413, satisfied the requirements of § 420.15. and obtained each approval required under § 420.17 for a license.

(c) The FAA may incorporate by reference any findings made part of the record to support a prior related licensing determination.

$420.47 License modification.

(a) Upon application or upon its own initiative, the FAA may modify a license to operate a launch site at any time by issuing a license order that adds, removes, or modifies a license term or condition to ensure compliance with the Act and the requirements of this chapter.

(b) After a license to operate a launch site has been issued, a licensee shall apply to the FAA for modification of its license if:

(1) The licensee proposes to operate the launch site in a manner that is not authorized by the license: or

(2) Any representation contained in the license application that is material to public health and safety or safety of property is no longer accurate and complete or does not reflect the licensee's actual operation of the launch site.

(c) An application to modify a license must meet the requirements of part 4 13 of this chapter. The licensee shall indicate any part of its license or license application that would be changed or affected by the proposed modification.

(d) The FAA will approve a request for modification that satisfies the requirements set forth in this part.

(e) Upon approval of a request for modification, the FAA will issue either a written approval to the licensee or a license order modifying the license if a term or condition of the license is changed, added, or deleted. A written approval has the full force and effect of a license order and is part of the licensing record.

§ 420.49 Compliance monitoring.

A licensee shall allow access by and cooperate with federal officers or employees or other individuals authorized by the FAA to observe any activities of the licensee, its customers, its contractors, or subcontractors, associated with licensed operation of the licensee's launch site.

Subpart D-Responsibilities of a Licensee

$420.51 Responsibilities*eneral.

(a) A licensee shall operate its launch site in accordance with the representations in the application upon which the licensing determination is based.

(b) A licensee is responsible for compliance with 49 U.S.C. Subtitle IX, ch. 701 and for meeting the requirements of this chapter.

§ 420.53 Control of public access.

(a) A licensee shall prevent unauthorized access to the launch site, and unauthorized, unescorted access to explosive hazard facilities or other hazard areas not otherwise controlled by a launch operator, through the use of security personnel, surveillance systems, physical barriers, or other means approved as part of the licensing process.

(b) A licensee shall notify anyone entering the launch site of safety rules and emergency and evacuation procedures prior to that person's entry unless that person has received a briefing on those rules and procedures within the previous year.

(c) A licensee shall employ warning signals or alarms to notify any persons at the launch site of any emergency.

§ 420.55 Scheduling of launch site operations.

(a) A licensee shall develop and implement procedures to schedule operations to ensure that each operation carried out by a customer, including a launch operator, at the launch site does not create the potential for a mishap that could result in harm to the public because of the proximity of the operations, in time or place, to operations of any other customer at the launch site.

(b) A licensee shall provide its launch site scheduling requirements to each customer before the customer begins operations at the launch site.

§ 420.57 Notifications.

(a) A licensee shall notify a launch operator of any limitations on the operations conducted at the launch site that arise out of its license to operate a launch site.

(b) A licensee shall complete an agreement with the local U.S. Coast Guard district to establish procedures for the issuance of a Notice to Mariners prior to launch and other such measures as the Coast Guard deems necessary to protect public health and safety.

(c) A licensee shall complete an agreement with the FAA regional office having jurisdiction over the airspace through which launches will take place, to establish procedures for the issuance of a Notice to Airmen prior to a launch and for closing of air routes during the launch window and other such measures as the FAA regional office deems necessary to protect public health and safety.

(d) At least two days prior to flight of a launch vehicle, the licensee shall notify local officials and all owners of land adjacent to the launch site of the schedule.

$420.59 Launch site accident investigation plan.

(a) General. A licensee shall develop and implement a launch site accident investigation plan that contains the licensee's procedures for reporting, responding to, and investigating launch site accidents, as defined in § 420.5. The launch site accident investigation plan must be signed by an individual authorized to sign and certify the application in accordance with § 4 13.7(c) of this chapter.

(b) *Reporting requirements.* A launch site accident investigation plan shall provide for—

(1) Immediate notification to the Federal Aviation Administration (FAA) Washington Operations Center in the event of a launch site accident.

(2) Submission of a written preliminary report to the FAA, Associate Administrator for Commercial Space Transportation, within five days of any launch site accident. The report must include the following information:

(i) Date and time of occurrence:

(ii) Location of the event:

(iii) Description of the event;

(iv) Number of injuries, if any, and general description of types of injury suffered:

(v) Property damage, if any, and an estimate of its value:

(vi) Identification of hazardous materials, as defined in § 401.5 of this chapter, involved in the event:

(vii) Any action taken to contain the consequences of the event: and

(viii) Weather conditions at the time of the event.

(c) Response plan. A launch site accident investigation plan shall contain procedures that—

(1) Ensure the consequences of a launch site accident are contained and minimized:

(2) Ensure data and physical evidence are preserved:

((3) Require the licensee to report to and cooperate with FAA or National Transportation Safety Board (NTSB) investigations and designate one or more points of contact for the FAA or NTSB; and

(4) Require the licensee to identify and adopt preventive measures for avoiding recurrence of the event.

(d) *Investigation plan.* A launch site accident investigation plan shall contain—

(1) Procedures for investigating the cause of a launch site accident, and participating in an investigation of a launch accident for launches launched from the launch site;

(2) Procedures for reporting launch site accident investigation results to the FAA; and

(3) Delineated responsibilities, including responsibilities for personnel assigned to conduct investigations and for any one retained by the licensee to conduct or participate in investigations,

(e) Applicability of other accident investigation procedures. Accident investigation procedures developed under 29 CFR 1910.119 and 40 CFR part 68 will satisfy the requirements of paragraphs (c) and (d) of this section to the extent that they include the elements provided in paragraphs (c) and (d) of this section.

5420.61 Records.

(a) A licensee shall maintain all records, data, and other material needed to verify that its operations are conducted in accordance with representation contained in the licensee's application. A licensee shall retain records for three years.

(b) In the event of a launch site accident, a licensee shall preserve all records related to the event. Records shall be retained until completion of any federal investigation and the FAA advises the licensee that the records need not be retained.

(c) A licensee shall make available to federal officials for inspection and copying all records required to be maintained under the regulations.

§ 420.63 Explosives.

(a) *Explosive siting.* A licensee shall ensure that the configuration of the launch-site is in acccordance with the licensee's explosive site plan, and that the licensee's explosive site plan is in compliance with the requirements in §§ *420.31-420.37.*

(b) *Lightningprotection.* A licensee shall ensure that the public is not exposed to hazards due to the initiation of explosives by lightning.

(1) *Elements of a lighting protection system.* Unless an explosive hazard facility meets the conditions of paragraph (b) (3) of this section, all explosive hazard facilities shall have a lightning protection system to ensure explosives are not initiated by lightning. A lightning protection system shall meet the requirements of paragraph (b) (2) of this section and include the following:

(i) *Air terminal.* An air terminal to intentionally attract a lightning strike.

(ii) *Down conductor.* A low impedance path connecting an air terminal to an earth electrode system.

(ii) *Earth electrode system.* An earth electrode system to dissipate the current from a lightning strike to ground.

(2) Bonding and surge protection.-(i) Bonding. All metallic bodies shall be bonded to ensure that voltage potentials due to lightning are equal everywhere in the explosive hazard facility. Any fence within six feet of a lightning protection system shall have a bond across each gate and other discontinuations and shall be bonded to the lightning protection system. Railroad tracks that run within six feet of the lightning protection system shall be bonded to the lighting protection system.

(ii) *Surge protection.* A lightning protection system shall include surge protection to reduce transient voltages due to lightning to a harmless level for all metallic power, communication, and instrumentation lines coming into an explosive hazard facility.

(3) Circumtances where no lightning protection system is required. No lightning protection system is required for an explosive hazard facility when a lightning warning system is available to permit termination of operations and withdrawal of the public to public area distance prior to an electrical storm, or for an explosive hazard facility containing explosives that cannot be initiated by lightning. If no lightning protection system is required, a licensee must ensure the withdrawal of the public to a public area distance prior to an electrical storm.

(4) Testing and inspection. Lightning protection systems shall be visually inspected semiannually and shall be tested once each year for electrical continuity and adequacy of grounding. A licensee shall maintain at the explosive hazard facility a record of results obtained from the tests, including any action taken to correct deficiencies noted.

(c) Electrical Power *Lines.* A licensee shall ensure that electric power lines at its launch site meet the following requirements:

(1) Electric power lines shall be no closer to an explosive hazard facility than the length of the lines between the poles or towers than support the lines unless an effective means is provided to ensure that energized lines cannot, on breaking, come in contact with the explosive hazard facility.

(2) Towers or poles supporting electrical distribution lines that carry between 15 and 69 KV. and unmanned electrical substations shall be no closer to an explosive hazard facility than the public area distance for that explosive hazard facility.

(3) Towers or poles supporting electrical transmission lines that carry 69 KV or more, shall be no closer to an explosive hazard facility than the public area distance for that explosive hazard facility.

Issued in Washington, DC on June 10, 1999.

Patricia G. Smith,

Associate Administrator for Commercial Space Transportation.

Appendix A to Part 420-Method for Defining a Flight Corridor

(a) Introduction

(1) This appendix provides a method to construct a flight corridor from a launch point for a guided suborbital launch vehicle or any one of the four classes of guided orbital launch vehicles from table 1, § 420.21, without the use of local meteorological data or a launch vehicle trajectory.

(2) A flight corridor includes an overflight exclusion zone in a launch area and, for a guided suborbital launch vehicle, an impact dispersion area in a downrange area. A flight corridor for a guided suborbital launch vehicle ends with the impact dispersion area, and, for the four classes of guided orbital launch vehicles. 5.000 nautical miles from the launch point.

(b) Data Requirements

(1) Maps. An applicant shall use any map for the launch site region with a scale not less than 1:250,000 inches per inch in the launch area and 1:20,000,000 inches per inch in the downrange area. As described in paragraph (b)(2), an applicant shall use a mechanical method, a semi-automated method, or a fully-automated method to plot a flight corridor on maps. A source for paper maps acceptable to the FAA is the U.S. Dept. of Commerce. National Oceanic and Atmospheric Administration, National Ocean Service.

(i) Projections for mechanical plotting method. An applicant shall use a conic projection. The FAA will accept a "Lambert-Conformal" conic projection. A polar aspect of a plane-azimuthal projection may also **be used** for far northern launch sites.

(ii) Projections for semi-automated plotting method. An applicant shall **use** cylindrical, conic, or plane projections for semi-automated plotting. The FAA will accept "Mercator" and "Oblique Mercator" cylindrical projections. The FAA will accept "Lambert-Conformal" and "Albers Equal-Area" conic projections. The FAA will accept "Lambert Azimuthal Equal-Area" and "Azimuthal Equidistant" plane projections.

(iii) Projections for fully-automated plotting method. The FAA will accept map projections used **by** geographical information system software scaleable pursuant to the requirements of paragraph (b)(l).

(2) Plotting Methods.

(i) Mechanical method. An applicant may use mechanical drafting equipment such as pencil, straight edge, ruler, protractor, and compass to plot the location of a flight corridor on a map. The FAA will accept straight lines for distances less than or equal to 7.5 times the map scale on map scales greater than or equal to 1: 1,000,000 inches per inch (in/in): or straight lines representing 100 nm or less on map scales less than 1: 1,000,000 in/in.

(ii) Semi-Automated method. An applicant may employ the range and bearing techniques in paragraph (b)(3) to create latitude and longitude points on a map. The FAA will accept straight lines for distances less than or equal to 7.5 times the map scale on map scales greater than or equal to 1: 1,000,000 inches per inch (in/in): or straight lines representing 100 nm or less on map scales less than 1: 1,000,000 in/in.

(Iii) Fully-Automated method. An applicant may use geographical information system software with global mapping data scaleable in accordance with paragraph (b)(1).

(3) Range and bearing computations on an ellipsoidal earth model.

(i) To create latitude and longitude pairs on an ellipsoidal earth model, an applicant shall use the following equations to calculate geodetic latitude (+N) and longitude (+E) given the launch point geodetic latitude (+N),

longitude (+E) range (nm). and bearing (degrees, positive clockwise from North).

(A) Input. An applicant shall use the following input in making range and bearing computations:

ϕ_1 = Geodetic latitude of launch point (DDD)
λ_1 = Longitude of launch point (DDD)
S = Range from launch point (nm)
α_{12} = Azimuth bearing from launch point (deg)

(B) Computations. An applicant shall use the following equations to determine the latitude (ϕ_2) and longitude (λ_2) of a target point situated "S" nm from the launch point on an azimuth bearing α_{12} degrees.

$$f = 1 - \frac{b}{a} \qquad \text{(Equation Al)}$$

Where:
a = WGS-84 semi-major axis (3443.91846652 nmi)
b = M'GS-84 semi-minor axis (3432.37165994 nmi)

$$\varepsilon^2 = \frac{\left(a^2 - b^2\right)}{b^2} \qquad \text{(Equation A2)}$$

$$\theta = \frac{S}{b} \text{ (radians)} \qquad \text{(Equation A3)}$$

$$g = (\cos \beta_1)(\cos \alpha_{12}) \qquad \text{(Equation A5)}$$

$$h = (\cos \beta_1)(\sin \alpha_{12}) \qquad \text{(Equation A6)}$$

$$\beta_1 = \tan^{-1}\left[\frac{(b \cdot \sin \phi_1)}{(a \cdot \cos \phi_1)}\right] \qquad \text{(Equation A4)}$$

$$m = \frac{\left[1 + \left(\frac{\varepsilon^2}{2}\right)\sin^2 \beta_1\right]\left[1 - h^2\right]}{2} \qquad \text{(Equation A7)}$$

$$n = \frac{\left[1 + \left(\frac{\varepsilon^2}{2}\right)\sin^2 \beta_1\right]\left[(\sin^2 \beta_1)(\cos \theta) + g \cdot (\sin \beta_1)(\sin \theta)\right]}{2} \qquad \text{(Equation A8)}$$

$$L = h \cdot \left[-f \cdot \theta + 3 \cdot f^2 \cdot n \cdot \sin \theta + \frac{3 \cdot f^2 \cdot m \cdot (\theta - \sin \theta \cdot \cos 0)}{2}\right] \text{ (radians)} \qquad \text{(Equation A9)}$$

$$M = m \cdot \varepsilon^2 \qquad \text{(Equation A10)}$$

$$A, = N \cdot \sin \theta \qquad \text{(Equation A12)}$$

$$N = n \cdot \varepsilon^2 \qquad \text{(Equation Al 1)}$$

$$A_2 = \left(\frac{M}{2}\right)(\sin \theta \cdot \cos \theta - \theta) \qquad \text{(Equation Al 3)}$$

$$A, = \frac{5}{02}\left(N^2 \cdot \sin \theta \cdot \cos \theta\right) \qquad \text{(Equation A14)}$$

$$A_4 = \left(\frac{M^2}{16}\right)\left(11 \cdot \theta - 13 \cdot \sin \theta \cdot \cos \theta - 8 \cdot \theta \cdot \cos^2 \theta + 10 \cdot \sin \theta \cdot \cos^3 \theta\right) \qquad \text{(Equation A15)}$$

$$A_5 = \left(\frac{M \cdot N}{2}\right)\left(3 \cdot \sin \theta + 2 \cdot \theta \cdot \cos \theta - 5 \cdot \sin \theta \cdot \cos^2 \theta\right) \qquad \text{(Equation A 16)}$$

$$\delta = \theta - A_1 + A_2 + A_3 + A, + A, \text{ (radians)} \qquad \text{(Equation A17)}$$

$$\sin\beta_2 = \sin\beta_1 \cdot \cos\delta + g \cdot \sin\delta \qquad \text{(Equation Al 8)}$$

$$\cos\beta_2 = \left[h^2 + \left(g \cdot \cos\delta - \sin\beta_1 \cdot \sin\delta\right)^2\right]^{\frac{1}{2}} \qquad \text{(Equation A19)}$$

$$\phi_2 = \left\{\tan^{-1}\left[\frac{(a \cdot \sin\beta_2)}{(b \cdot \cos\beta_2)}\right]\right\} \cdot \left(\frac{180}{\pi}\right) \text{(geodetic latitude of target point, DDD)} \qquad \text{(Equation A20)}$$

$$A = \tan^{-1}\left[\frac{(\sin\delta \cdot \sin\alpha_{12})}{(\cos\beta_1 \cdot \cos\delta - \sin\beta_1 \cdot \sin\delta \cdot \cos\alpha_{12})}\right] \qquad \text{(Equation A2 1)}$$

$$\lambda_2 = (\lambda_1 + \Lambda + L)\left(\frac{180}{\pi}\right) \text{(longitude of target point, DDD)} \qquad \text{(Equation A22)}$$

(ii) To create latitude and longitude pairs on an ellipsoidal earth model, an applicant shall use the following equations to calculate the distance (S) of the geodesic between two points P_1 and P_2), the forward azimuth (α_{12}) of the geodesic at P_1, and the back azimuth (α_{21}) of the geodesic at P_2, given the geodetic latitude (+N), longitude (+E) of P_1 and P_2. Azimuth is measured positively clockwise form the North.

(A) Input. An applicant shall use the following input:

ϕ_1 = Geodetic latitude of point P_1 (DDD)
λ_1 = Longitude of point P_1 (DDD)
ϕ_2 = Geodetic latitude of point P_2 (DDD)
λ_2 = Longitude of point P_2 (DDD)

(B) Computations. An applicant shall use the following equations to determine the distance (S). the forward azimuth (α_{12}) of the geodesic at P_1, and the back azimuth (α_{21}) of the geodesic at P_2,

$$f = 1 - \frac{b}{a} \qquad \text{(Equation A23)}$$

Where:
a = WGS–84 semi-major axis (3443.91846652 nmi)
b = M'GS-84 semi-minor axis (3432.37 165994 nmi)

$$L = \lambda_2 - \lambda_1 \qquad \text{(Equation A24)}$$

$$\beta_1 = \tan^{-1}\left[\frac{(b \cdot \sin\phi_1)}{a \cdot \cos\phi_1}\right] \qquad \text{(Equation A25)}$$

$$\beta_2 = \tan^{-1}\left[\frac{(b \cdot \sin\phi_2)}{a \cdot \cos\phi_2}\right] \qquad \text{(Equation A26)}$$

$$A = \sin\beta_1 \cdot \sin\beta_2 \qquad \text{(Equation A27)}$$

$$B = \cos\beta_1 \cdot \cos\beta_2 \qquad \text{(Equation A28)}$$

$$\cos\delta = A + B \cdot \cos L \qquad \text{(Equation A29)}$$

$$n = \frac{(a - b)}{(a + b)} \qquad \text{(Equation A30)}$$

$$(\beta_2 - \beta_1) = (\phi_2 - \phi_1) + 2 \cdot \left[A \cdot \left(n + n^2 + n^3\right) - B \cdot \left(n + n^2 + n^3\right)\right] \cdot \sin(\phi_2 - \phi_1) \text{ radians} \qquad \text{(Equation A31)}$$

$$\sin\delta = \left\{(\sin L \cdot \cos\beta_2)^2 + \left[\sin(\beta_2 - \beta_1) + 2 \cdot \cos\beta_2 \cdot \sin\beta_1 \cdot \sin^2(L/2)\right]^2\right\}^{\frac{1}{2}} \qquad \text{(Equation A32)}$$

$$\delta = \tan^{-1}\left(\frac{\sin\delta}{\cos\delta}\right) \text{evaluated in positve radians} \leq \pi \qquad \text{(Equation A33)}$$

$$c = \frac{B \cdot \sin L}{\sin \delta} \quad \text{(Equation A34)} \qquad m = 1 - c^2 \quad \text{(Equation A35)}$$

$$S = b \cdot \left| \begin{array}{l} \delta \cdot \left[1 + f + f^2\right] + A \cdot \left[\left(f + f^2\right) \cdot \sin\delta - \left(f^2 \cdot \delta^2\right)/(2 \cdot \sin\delta)\right] \\ -(m/2)\left[\left(f + f^2\right)(\delta + \sin\delta \cdot \cos\delta) - \left(f^2 \cdot \delta^2\right)/(\tan\delta)\right] \\ -(A' \cdot f^2/2) \cdot \sin\delta \cdot \cos\delta \\ +\left(f^2 \cdot m^2/16\right)\left[\delta + \sin\delta \cdot \cos\delta - 2 \cdot \sin\delta \cdot \cos^3\delta - 8\delta^2/(\tan\delta)\right] \\ +(A' \cdot m \cdot f^2/2)\left[\sin\delta \cdot \cos^2\delta + \delta^2/(\sin\delta)\right] \end{array} \right| \quad \text{(Equation A36)}$$

in the same units as "a" and "b"

$$\Lambda = L + c \cdot \left\{ \begin{array}{l} \delta \cdot \left(f + f^2\right) - \left(A \cdot f^2/2\right)\left[\sin\delta + 2\delta^2/(\sin\delta)\right] \\ +\left(m \cdot f^2/4\right)\left[\sin\delta\cos\delta - 5\delta + 4\delta^2/(\tan\delta)\right] \end{array} \right\} \text{radians} \quad \text{(Equation A37)}$$

$$\alpha_{12} = \tan^{-1}\left\{ \frac{(\cos\beta_2 \cdot \sin\Lambda)}{\left[\sin(\beta_2 - \beta_1) + 2 \cdot \cos\beta_2 \cdot \sin\beta_1 \cdot \sin^2(\Lambda/2)\right]} \right\} \cdot \left(\frac{180}{\pi}\right) \text{degrees} \quad \text{(Equation A38)}$$

$$\alpha_{21} = \tan^{-1}\left\{ \frac{(-\cos\beta_1 \cdot \sin A)}{\left[2 \cdot \cos\beta_1 \cdot \sin\beta_2 \cdot \sin^2(\Lambda/2) - \sin(\beta_2 - \beta_1)\right]} \right\} \cdot \left(\frac{180}{\pi}\right) \text{degrees} \quad \text{(Equation A39)}$$

(c) Creation *of a Flight Corridor*

(1) To define a flight corridor, an applicant shall:

(i) Select a guided suborbital or orbital launch vehicle, and, for an orbital launch vehicle, select from table 1 in § 420.21 a launch vehicle class that best represents the type of launch vehicle the applicant plans to support at its launch point:

(ii) Select a debris dispersion radius (D_{max}) from table A- 1 corresponding to the guided suborbital launch vehicle or orbital launch vehicle class selected in paragraph (c)(l)(i);

(iii) Select a launch point geodetic latitude and longitude; and

(iv) Select a flight azimuth.

(2) An applicant shall define and map an overflight exclusion zone using the following method:

(i) Select a debris dispersion radius (D_{max}) from table A-l and a downrange distance (D_{OEZ}) from table A-Z to define an overflight exclusion zone for the guided suborbital launch vehicle or orbital launch vehicle class selected in paragraph (c)(l)(i).

(ii) An overflight exclusion zone is described by the intersection of the following boundaries, which are depicted in figure Al:

(A) An applicant shall define an uprange boundary with a half-circle arc of radius D_{max} and a chord of length twice D_{max} connecting the half-circle arc endpoints. the uprange boundary placement on a map has the chord midpoint positioned on the launch point with the chord oriented along an azimuth ±90° from the launch azimuth and the half-circle arc located uprange from the launch point.

(B) An applicant shall define the downrange boundary with a half-circle arc of radius D_{max} and a chord of length twice D_{max} connecting the half-circle arc endpoints. The downrange boundary placement on a map has the chord midpoint intersecting the nominal flight azimuth line at a distance D_{OEZ} inches downrange with the chord oriented along an azimuth ±90° from the launch azimuth and the half-circle arc located downrange from the intersection of the chord and the flight azimuth line.

(C) Crossrange boundaries of an overflight exclusion zone are defined by two lines segments. Each is parallel to the flight azimuth with one to the left side and one to the right side of the flight azimuth line. Each line connects an uprange half-circle arc endpoint to a downrange half-circle arc endpoint as shown in figure A- 1.

(iii) An applicant shall identify the overflight exclusion zone on a map meeting the requirements specified in paragraph (b).

(3) An applicant shall define and map a flight corridor using the following method:

(i) In accordance with paragraph (b), an applicant shall draw a flight corridor on a map(s) with the D_{max} origin centered on the intended launch point and the flight corridor centerline (in the downrange direction) aligned with the initial flight azimuth. The flight corridor is depicted in figure A-2 and its line segment lengths are tabulated in table A-3.

(ii) An applicant shall define the flight corridor using the following boundary definitions:

(A) An applicant shall draw an uprange boundary, which is defined by an arc-line GB (figure A-2). directly uprange from and centered on the intended launch point with radius D_{max}.

(B) An applicant shall draw line CF perpendicular to and centered on the flight azimuth line, and positioned 10 nm downrange from the launch point. The applicant shall use the length of line CF provided in table A-3 corresponding to the guided suborbital launch vehicle or orbital launch vehicle class selected in paragraph (d)(1)(i).

(C) An applicant shall draw line DE perpendicular to and centered on the flight azimuth line, and positioned 100 nm downrange from the launch point. The applicant shall use the length of line DE provided in table A-3 corresponding to the guided suborbital launch vehicle or orbital launch vehicle class selected in paragraph (c)(1)(i).

(D) Except for a guided suborbital launch vehicle, an applicant shall draw a downrange boundary, which is defined by line HI and is drawn perpendicular to and centered on the flight azimuth line, and positioned 5,000 nm downrange from the launch point. The

applicant shall use the length of line HI provided in table A-3 corresponding to the orbital launch vehicle class selected in paragraph (c) (1) (i).

(E) An applicant shall draw crossrange boundaries, which are defined by three lines on the left side and three lines on the right side of the flight azimuth. An applicant shall construct the left flight corridor boundary according to the following, and as depicted in figure A–3:

(1) The first line (line BC in figure A-3) is tangent to the uprange boundary arc, and ends at endpoint C of line CF. as depicted in figure A-3;

(2) The second line (line CD in figure A–3) begins at endpoint C of line BC and ends at endpoint D of line DH, as depicted in figure A-3;

(3) For all orbital launch vehicles, the third line (line DH in figure A-3) begins at endpoint D of line CD and ends at endpoint H of line HI, as depicted in figure A-3: and

(4) For a guided suborbital launch vehicle, the line DH begins at endpoint D of line CD and ends at a point tangent to the impact dispersion area drawn in accordance with paragraph (c)(4) and as depicted in figure A–4.

(F) An applicant shall repeat the procedure in paragraph (c) (3) (ii)(E) for the right side boundary.

(iii) An applicant shall identify the flight corridor on a map meeting the requirements specified in paragraph (b).

(4) For a guided suborbital launch vehicle, an applicant shall define a final stage impact dispersion area as part of the flight corridor and show the impact dispersion area on a map, as depicted in figure A-3, in accordance with the following:

(i) An applicant shall select an apogee altitude (H_{ap}) for the launch vehicle final stage. The apogee altitude should equal the highest altitude intended to bc reached by a guided suborbital launch vehicle launched from the launch point.

(ii) An applicant shall define the impact dispersion area by using an impact range factor [$IP(H_{ap})$] and a dispersion factor [$DISP(H_{ap})$] as shown below:

(A) An applicant shall calculate the impact range (D) for the final launch vehicle stage. An applicant shall set D equal to the maximum apogee altitude (H_{ap}) multiplied by the impact range factor as shown below:

$$D = H_{ap} \cdot IP\left(H_{ap}\right) \qquad \text{(Equation A40)}$$

Where:

$IP(H_{ap})$ = 0.4 for an apogee less than 100 km: and

$ip(H_{ap})$ = 0.7 for an apogee 100 km or greater.

(B) An applicant shall calculate the impact dispersion radius (R) for the final launch vehicle stage. An applicant shall set R equal to the maximum apogee altitude (H_{ap}) multiplied by the dispersion factor as shown below:

$$R = H_{ap} \cdot DISP\left(H_{ap}\right) \qquad \text{(Equation A41)}$$

Where:

$DISPH(H_{ap}) = 0.05$

(iii) An applicant shall draw the impact dispersion area on a map with its center on the predicted impact point. An applicant shall then draw line DH in accordance with paragraph (c)(3)(ii)(E)(4).

(d) Evaluate the Flight Corridor

(1) An applicant shall evaluate the flight corridor for the presence of any populated areas. If an applicant determines that no populated area is located within the flight corridor, then no additional steps are necessary.

(2) If a populated area is located in an overflight exclusion zone, an applicant may modify its proposal or demonstrate that there are times when no people are present or that the applicant has an agreement in place to evacuate the public from the overflight exclusion zone during a launch.

(3) If a populated area is located within the flight corridor, an applicant may modify its proposal and create another flight corridor pursuant to appendix A, use appendix B to narrow the flight corridor, or complete a risk analysis as provided in appendix C.

BILLING CODE 4910-13-M

Table A-l: Debris Dispersion Radius (D_{max}) (in)

Orbital Launch Vehicles				Suborbital Launch Vehicles
Small	Medium	Medium Large	Large	Guided
87,600 (1.20 nm)	111,600 (1.53 nm)	127,200 (1.74 nm)	156,000 (2.14 nm)	96,000 (1.32 nm)

Table A-2: Overflight Exclusion Zone Downrange Distance (D_{OEZ}) (in)

Orbital Launch Vehicles				Suborbital Launch Vehicles
Small	Medium	Medium Large	Large	Guided
240,500 (3.30 nm)	253,000 (3.47 nm)	310,300 (4.26 nm)	937,700 (12.86 nm)	232,100 (3.18 nm)

Table A-3: Flight Corridor Line Segment Lengths

D_{max} (in)		Line Segment Lengths (x 10^6 inches)		
Orbital Launch Vehicles		$\overline{CF}$	$\overline{DE}$	$\overline{HI}$
Small	87600 (1.20 nm)	2.87620 (39.45 nm)	8.59452 (117.87 nm)	128.566 (1763.27 nm)
Medium	111,600 (1.53 nm)	2.97220 (40.76 nm)	8.64252 (118.53 nm)	128.566 (1763.27 nm)
Med-Large	127,200 (1.74 nm)	3.03460 (41.62 nm)	8.67372 (118.96 nm)	128.566 (1763.27 nm)
Large	156,000 (2.14 nm)	3.14979 (43.20 nm)	8.73131 (119.75 nm)	128.566 (1763.27 nm)
Suborbital Launch Vehicles		$\overline{CF}$	$\overline{DE}$	$\overline{HI}$
Guided	96,000 (1.32 nm)	2.90980 (39.91 nm)	8.61132 (118.10 nm)	N/A

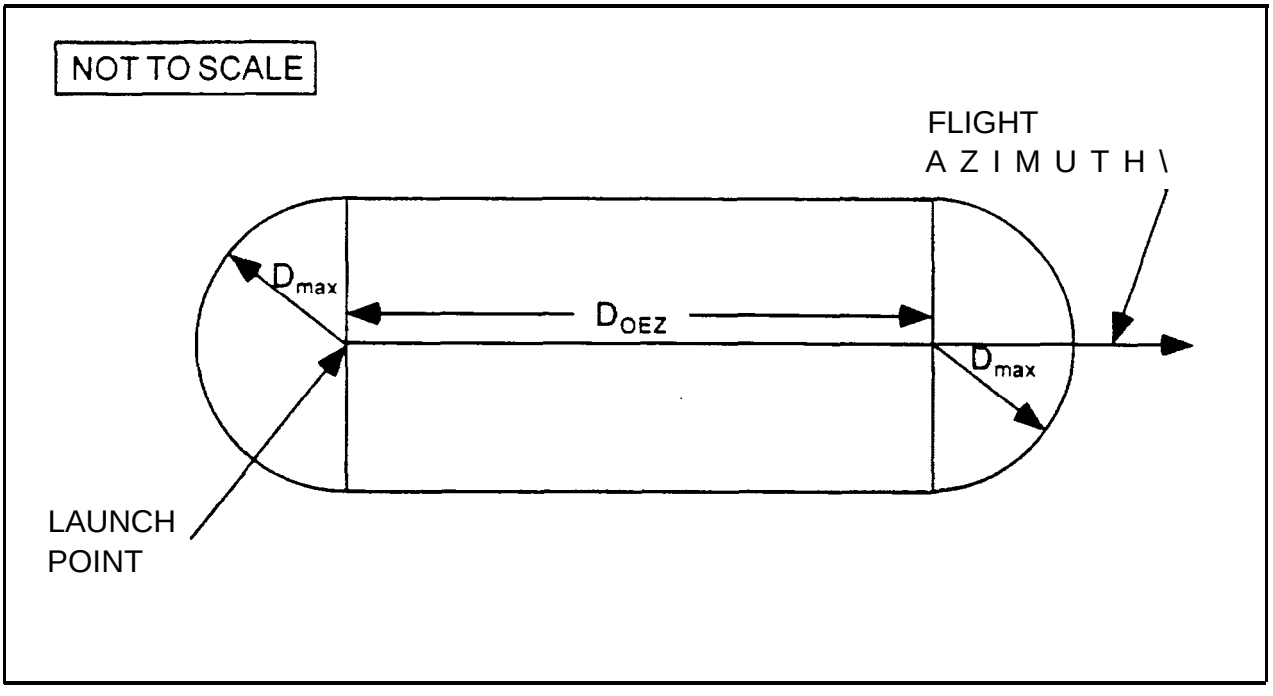

Figure A-l
Overflight Exclusion Zone

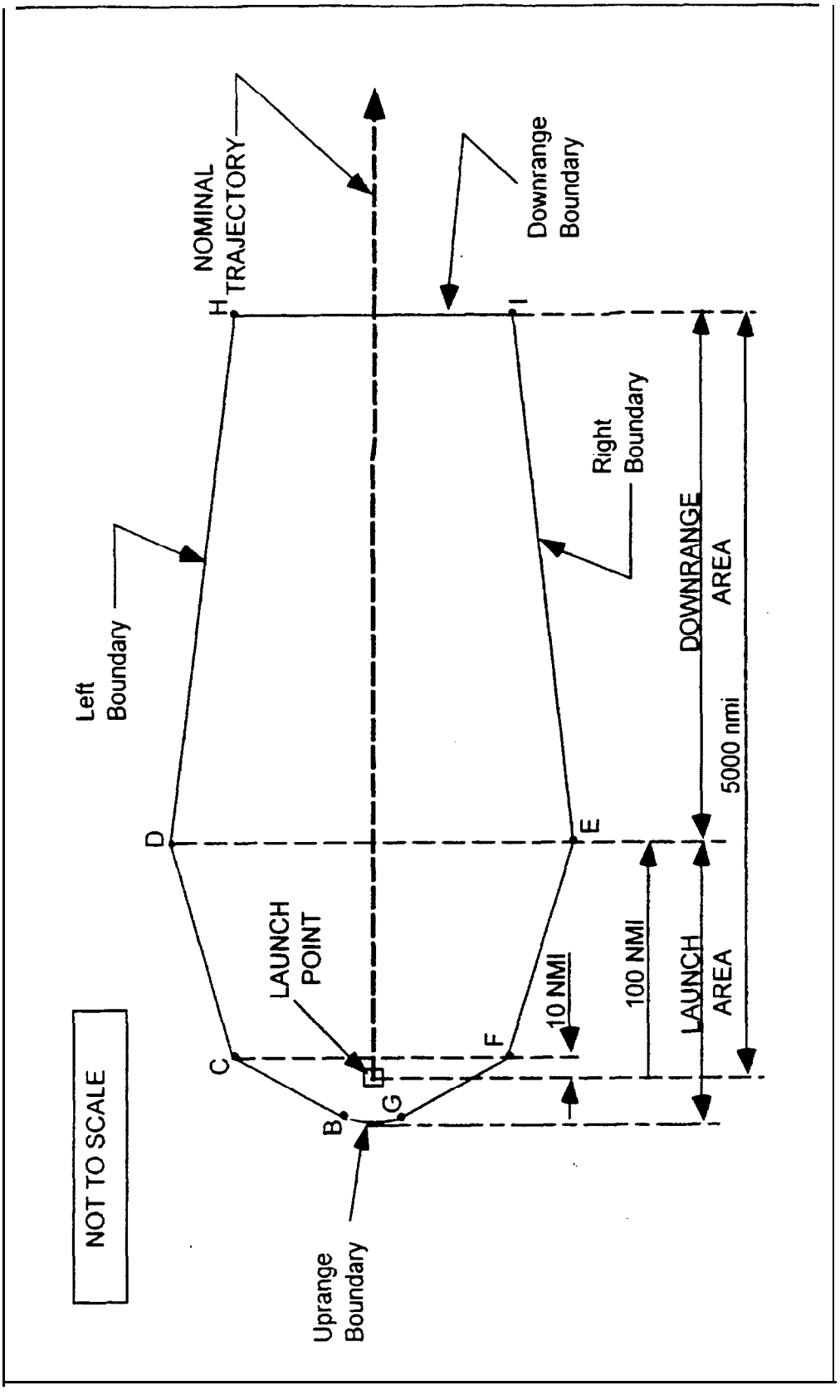

Figure A-2
Flight Corridor

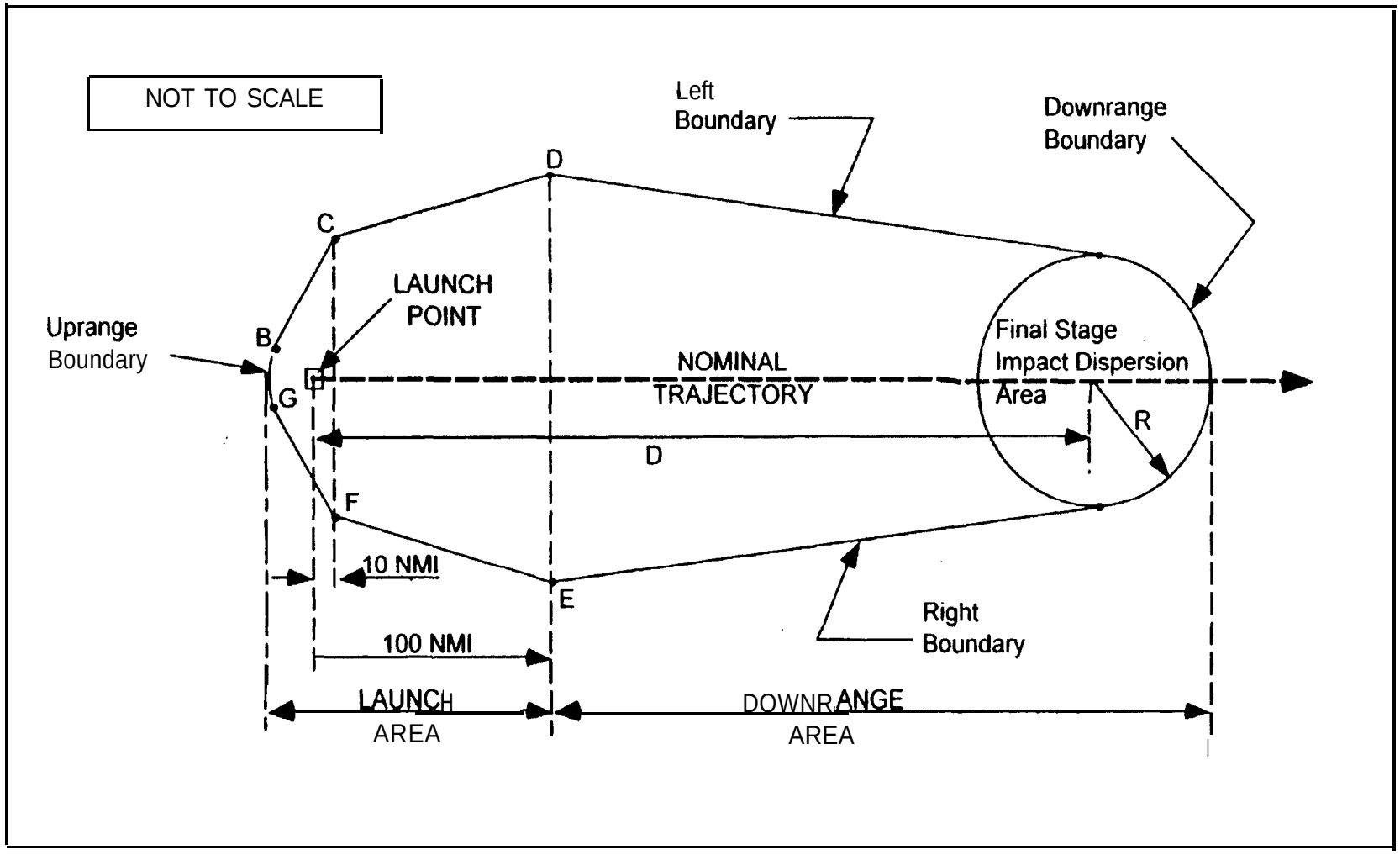

Figure A-4
Flight Corridor for Guided Sub-Orbital Launch Vehicles

BILLING CODE 4910–13–C

Appendix B to Part 420-Method for Defining a Flight Corridor

(a) Introduction

(1) This appendix provides a method to construct a flight corridor from a launch poinr for a guided suborbital launch vehicle or any one of the four classes of guided orbital launch vehicles from table 1, § 420.21, using local mereorological data and a launch vehicle trajectory.

(2) A flight corridor is constructed in two sections-one section comprising a launch area and one section comprising a downrange area. The launch area of a flight corridor reflects the extent of launch vehicle debris impacts in the event of a launch vehicle failure and applying local meteorological conditions. The downrange area reflects the extent of launch vehicle debris impacts in the event of a launch vehicle failure and applying vehicle imparted velocity, malfunctions turns, and vehicle guidance and performance dispersions.

(3) A flight corridor includes an overflight exclusion zone in the launch area and, for a guided suborbital launch vehicle, an impact dispersion area in the downrange area. A flight corridor for a guided suborbital launch vehicle ends with an impact dispersion area and, for the four classes of guided orbital launch vehicles. 5.000 nautical miles (nm) from the launch point.

(b) Data Requirements

(1) Launch area data requirements. An applicant shall satisfy the following data requirements to perform the launch area analysis of this appendix. The data requirements are identified in table B-l along with sources where data acceptable to the FAA may be obtained.

(i) An applicant must select meteorological data for the proposed launch site that meet the specifications in table B-l.

TABLE **B-I** .—LAUNCH AREA DATA **REQUIREMENTS**

Data category	Data item	Data source
Meteorological Data.	Local statistical wind data versus altitude up to 50,000 feet. Required data are: altitude (ft), atmospheric density (slugs/ft³), mean East/West meridianal (u) and North/South zonal (v) wind (ft/sec), standard deviation of u and v wind (ft/sec), correlation coefficient, number of observations and wind percentile (%)	These data may be obtained from: Global Gridded Upper Air Statistics, Climate Applications Branch, National Climatic Data Center.
Nominal Trajectory Data.	State vector data versus time after liftoff in topocentric launch point centered X,Y,Z,X,Y,Z coordinates with the X-axis aligned with the flight azimuth. Trajectory time intervals shall not be greater than one second. XYZ units are in feet and X,Y,Z units are in ft/sec	Actual launch vehicle trajectory data; or trajectory generation software meeting requirements in paragraph (b)(1)(ii).
Debris Data .	A fixed ballistic coefficient equal to 3 lbs/ft² is used for the launch area	N/A.
Geographical Data.	Launch point geodetic latitude on the WGS–84 ellipsoidal earth model	Geographical surveys or Global Positioning System.
	Launch point longitude on an ellipsoidal earth model	
	Maps using scales of not less than 1:250,000 inches per inch within 100 nm of a launch point and 1:20,000,000 inches per inch for distances greater than 100 nm from a launch point	Map types with scale and projection information are listed in the Defense Mapping Agency, Public Sale, Aeronautical Charts and Publications Catalog. The catalog and maps may be ordered through the U.S. Dept. of Commerce, National Oceanic and Atmospheric Administration, National Ocean Service.

(ii) For a guided orbital launch vehicle, an applicant shall obtain or create a launch vehicle nominal trajectory. An applicant may use trajectory data from a launch vehicle manufacturer or generate a trajectory using trajectory simulation software. Trajectory time intervals shall be no greater than one second. If an applicant uses a trajectory computed with commercially available software products. the software must calculate the trajectory using the following parameters, or demonstrated equivalents:

(A) Launch location:

(1) Launch point. using geodetic latitude and longitude to four decimal places: and

(2) Launch point height above sea level.

(B) Ellipsoidal earth:

(1) Mass of earth:

(2) Radius of earth;

(3) Earth flattening factor; and

(4) Gravitational harmonic constants (J2, J3, J4).

(C) Vehicle characteristics:

(1) Mass. as a function of time;

(2) Thrust, as a function of time;

(3) Specific impulse (I_{SP}), as a function of rime: and

(4) Stage dimensions.

(D) Launch events:

(1) Stage burn times; and

(2) Stage drop-off times.

(E) Atmosphere:

(1) Density vs. altitude;

(2) Pressure vs. altitude:

(3) Speed of sound vs. altitude; and

(4) Temperature vs. altitude.

(F) Winds:

(1) Wind direction vs. altitude: and

(2) Wind magnitude vs. altitude.

(I) Aerodynamics: drag coefficient vs. mach number for each stage of flight showing subsonic, transonic and supersonic mach regions for each stage.

(iii) An applicant shall USC a ballistic coefficient (β) of 3 lbs/ft² for debris impact computations.

(iv) An applicant shall satisfy the map and plotting requirements for a launch area in appendix A, paragraph (b).

(2) Downrange area data requirements. An applicant shall satisfy the following data requirements to perform the downrange area analysis of this appendix.

(i) The launch vehicle class and method of generating a trajectory used in the launch area shall be used by an applicant in the downrange area as well. Trajectory time intervals must not be greater than one second.

(ii) An applicant shall satisfy the map and plotting data requirements for a downrange area in appendix A, paragraph (b).

(c) Construction of a Launch Area of a Flight *Corridor*

(1) An applicant shall construct a launch area of a flight corridor using the processes and equations of this paragraph for a single trajectory position. An applicant shall repeat these processes at time points on the launch vehicle trajectory in time intervals no greater than one second. When choosing wind data, an applicant shall select a time period between one and 12 months.

(2) A launch area analysis must include all trajectory positions whose Z-values are less than or equal to 50,000 ft.

(3) Each trajectory time is denoted by the subscript "i". Height intervals for a given atmospheric pressure level are denoted by the subscript "j".

(4) Using data from the GGUAS CD-ROM, an applicant shall estimate the mean atmospheric density. maximum wind speed, height interval fall times and height interval debris dispersions for 15 mean geometric height intervals.

(i) The height intervals in the GGUAS source data vary as a function of the following 15 atmospheric pressure levels (milibars): Surface, 1000, 850. 700, 500, 400. 300. 250. 200. **150,** 100. 70, 50. 30. 10. The actual geometric height associated with each pressure level varies depending on the time

of year. An applicant shall estimate the mean geometric height over the period of months selected in subparagraph (1) of this paragraph for each of the 15 pressure levels as shown in equation B1.

$$\bar{H}_j = \frac{\sum_{m=1}^{k} h_m \cdot n_m}{\sum_{m=1}^{k} n_m} \qquad \text{(Equation B 1)}$$

Where:

$\bar{H}_j$=mean geometric height
h_m=geometric height for a given month
n_m=number of observations for a given month
k=number of wind months of interest

(ii) The atmospheric densities in the source data also vary as a function of the 15 atmospheric pressure levels. The actual atmospheric density associated with each pressure level varies depending on the time of year. An applicant shall estimate the mean atmospheric density over the period of months selected in subparagraph (1) of this paragraph for each of the 15 pressure levels as shown in equation B2.

$$\bar{P}_j = \frac{\sum_{m=1}^{k} P_m \cdot n_m}{\sum_{m=1}^{k} n_m} \qquad \text{(Equation B2)}$$

Where:

$\bar{\rho}_j$=mean atmospheric density
ρ_m=atmospheric density for a given month
n_m=number of observation for a given month
k=number of wind months of interest

(iii) An applicant shall estimate the algebraic maximum wind speed at a given pressure level as follows and shall repeat the process for each pressure level.

(A) For each month, an applicant shall calculate the monthly mean wind speed ($\bar{W}_{az}$) for 360 azimuths using equation B3:

(B) An applicant shall select the maximum monthly mean wind speed from the 360 azimuths:

(C) An applicant shall repeat subparagraphs (c)(4)(iii)(A) and (B) for each month of interest: and

(D) An applicant shall select the maximum mean wind speed from the range of months. The absolute value of this wind is designated W_{max} for the current pressure level.

(iv) An applicant shall calculate speed using the means for winds from the West (u) and winds from the North (v). An applicant shall use equation B3 to resolve the winds to a specific azimuth bearing.

$$W_{az} = u \cdot \cos(90 - az) + v \cdot \sin(90 - az) \qquad \text{(Equation B3)}$$

Where:

az=wind azimuth
u=West zonal wind component
v=North zonal wind component
$\bar{W}_{az}$=mean wind speed at azimuth for each month

(v) An applicant shall estimate the interval fall time over a height interval assuming the initial descent velocity is equal to the terminal velocity (V_T). An applicant shall use equations B4 through B6 to estimate the fall time over a given height interval.

$$\Delta H_j = \bar{H}_{j+1} - \bar{H}_j \qquad \text{(Equation B4)}$$

$$V_{Tj} = \left| \frac{2 \cdot \beta}{\frac{(\bar{\rho}_{j+1} + \bar{\rho}_j)}{2}} \right|^{.5} \qquad \text{(Equation B5)}$$

$$t_j = \frac{\Delta H_j}{V_{T_j}} \qquad \text{(Equation B6)}$$

Where:

ΔH_j=height difference between two mean geometric heights
β=ballistic coefficient
$\bar{\rho}_x$=mean atmospheric density for the corresponding mean geometric heights
v_{Tj}=terminal velocity

(vi) An applicant shall estimate the interval debris dispersion (D_j) by multiplying the interval fall time by the algebraic maximum mean wind speed (W_{max}) as shown in equation B7.

$$D_j = t_j \cdot W_{max} \qquad \text{(Equation B7)}$$

(5) Once the D_j are estimated for each height interval, an applicant shall determine the total debris dispersion (D_i) for each Z_i using a linear interpolation and summation exercise. An applicant shall use a launch point height of zero equal to the surface level of the nearest GGUAS grid location and is shown below in equation B8

$$D_i = D_j \cdot \left(\frac{Z_i - \bar{H}_j}{\bar{H}_{J+1} - \bar{H}_j} \right) + \sum_{n=1}^{j-1} D_n \qquad \text{(Equation B8)}$$

Where:

n=number of height intervals below j^{th} height interval

(6) Once all the D_i radii have been calculated, an applicant shall produce a launch area flight corridor according to instructions in subparagraphs (c)(6)(i)-(iv).

(i) On a map meeting the requirements of appendix A, paragraph (b), an applicant shall plot the X_i position location on the flight azimuth for the corresponding Z, position:

(ii) An applicant shall draw a circle of radius D_i centered on the corresponding X_i position: and

(iii) An applicant shall repeat the instructions in subparagraphs (c)(6)(i)-(ii) for each D, radius.

(iv) The launch area of a flight corridor is the enveloping line that encloses the outer boundary of the D, circles as shown in Fig. B- 1. The uprange portion of a flight corridor is described by a semi-circle arc that is a portion of either the most uprange D_i dispersion circle, or the overflight exclusion zone (defined in subparagraph (c) (7)), whichever is further uprange.

(7) An applicant shall define an overflight exclusion zone in the launch area pursuant to the instructions provided in appendix A, subparagraph (c) (2).

(8) An applicant shall draw the launch area flight corridor and overflight exclusion zone on a map(s) meeting the requirements of table B-1.

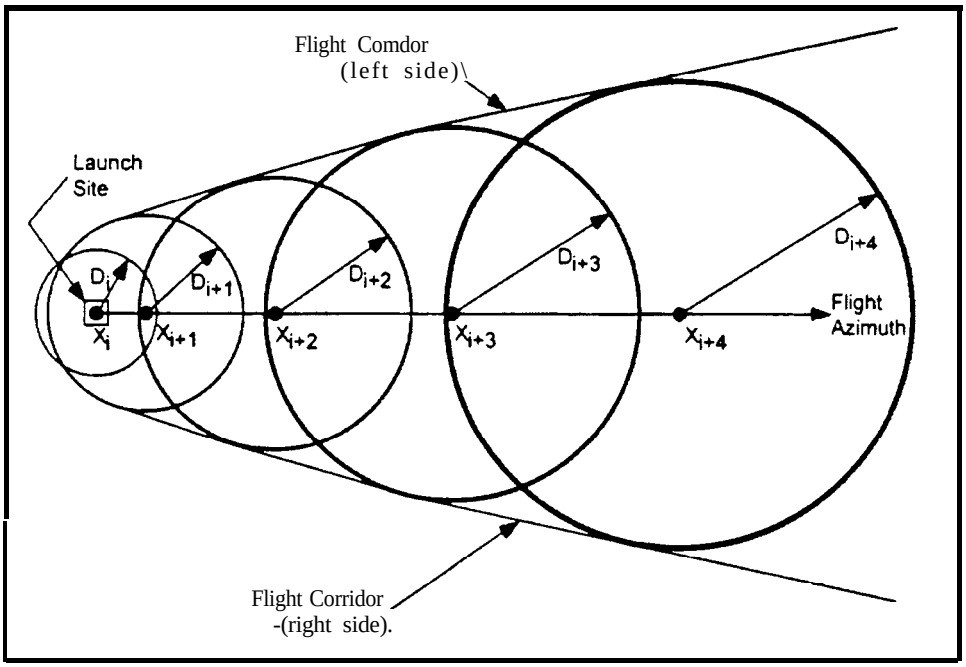

Figure B - 1: Launch Area of a Flight Corridor

(d) Construction of a downrange area of a flight corridor

(1) The downrange area analysis estimates the debris dispersion for the downrange time points on a launch vehicle trajectory. An applicant shall perform the downrange area analysis using the processes and equations of this paragraph.

(2) The downrange area analysis shall include trajectory positions at a height (the Z,-values) greater than 50,000 feet and nominal trajectory IIP values less than or equal to 5.000 nm. For a guided suborbital launch vehicle, the final IIP value that an applicant must consider is the launch vehicle final stage impact point. Each trajectory time shall be one second or less and is denoted by the subscript "i".

(3) An applicant shall compute the donnrange area of a flight corridor boundary in four steps, from each trajectory time increment: Determine a reduction ratio factor; calculate the launch vehicle position after simulating a malfunction turn: rotate the state vector after the malfunction turn in the range of three degrees to one degree as a function of X, distance downrange: and compute the IIP of the resulting trajectory. The locus of IIPs describes the boundary of the downrange area of a flight corridor. An applicant shall use the following subparagraphs, (d)(3)(i)-(v), to compute the downrange area of the flight corridor boundary:

(i) Compute the downrange distance to the final IIP position for a nominal trajectory as follows:

(A) Using equations B30 through B69, determine the IIP coordinates (ϕ_{max}, λ_{max}) for the nominal state vector before the launch vehicle enters orbit where a in equation B30 is the nominal flight azimuth angle measured from True North.

(B) Using the range and bearing equations in appendix A. paragraph (b)(3), determine the distance (S_{max}) from the launch point coordinates (ϕ_{lp} λ_{lp}) to the IIP coordinates (ϕ_{max}, λ_{max}) computed in (3)(i)(A) of this paragraph.

(C) The distance for S_{max} may not exceed 5000 mm. In cases when the actual value exceeds 5000 nm the applicant shall use 5000 nm for S_{max}.

(ii) Compute the reduction ratio factor (F_{ri}) for each trajectory time increment as follows:

(A) Using equations B30 through B69, determine the IIP coordinates (ϕ_i, λ_i) for the nominal state vector where α in equation B30 is the nominal flight azimuth angle measured from True North.

(B) Using the range and bearing equations in appendix A, paragraph (b)(3), determine the distance (S,) from the launch point coordinates (ϕ_{lp} λ_{lp}) to the IIP coordinates (ϕ_i, λ_i) computed in (3)(ii)(A) of this paragraph.

(C) The reduction ratio factor is:

$$F_{ri} = \left(1 - \frac{S_i}{S_{max}}\right) \qquad \text{(Equation B9)}$$

(iii) An applicant shall compute the launch vehicle position and velocity components after a simulated malfunction turn for each X,, using the following method.

(A) Turn duration (At)= 4 sec.

(B) Turn angle (0).

$\Theta = (F_{ri}) * 45$ degrees.

The turn angle equations perform a turn in the launch vehicle's yaw plane, as depicted in figure B-2.

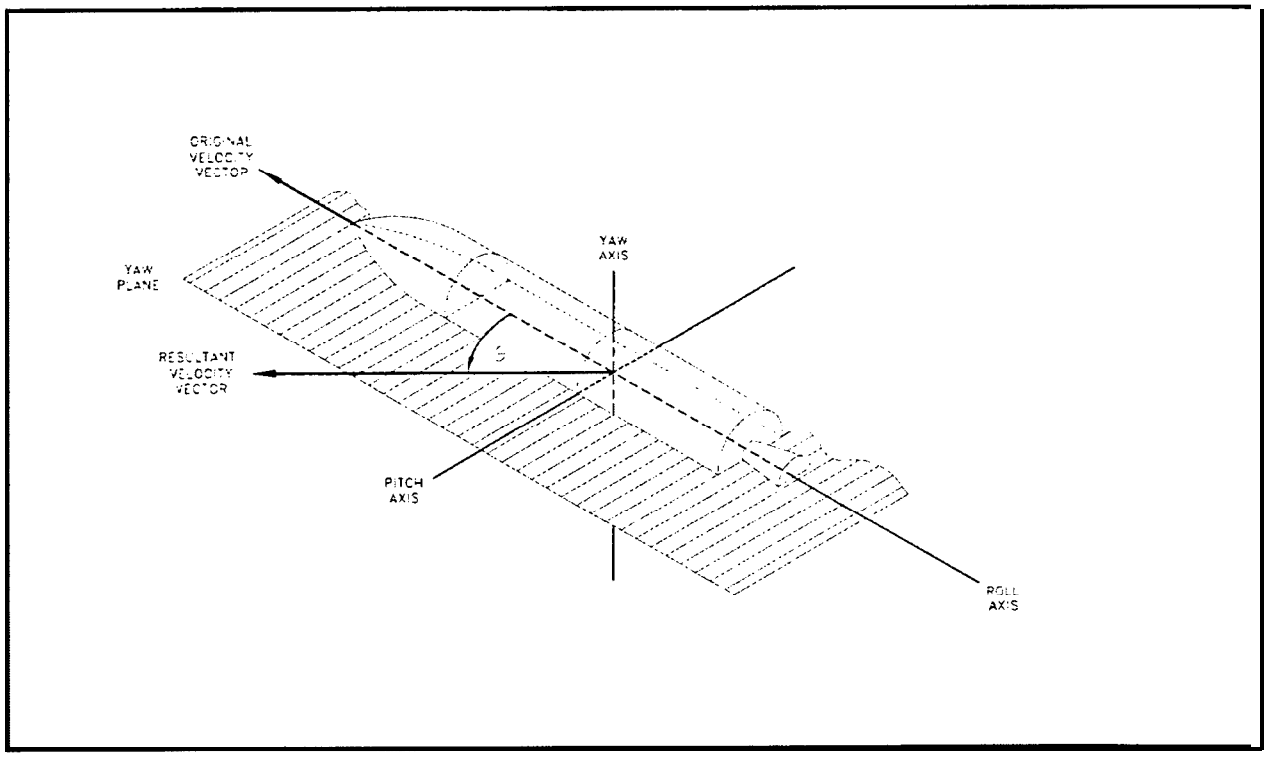

Figure B-2: Velocity Vector Turn Angle in Yaw Plane

(C) Launch vehicle velocity magnitude at the beginning of the turn (V_b) and velocity magnitude at the end of the turn (V_e).

$$\theta = (F_{ri}) * 45 \text{ degrees.} \quad \text{(Equation B10)}$$

$$V_b = \left(\dot{X}_i^2 + \dot{Y}_i^2 + \dot{Z}_i^2\right)^{0.5} \text{ ft/sec} \quad \text{(Equation B 11)}$$

(D) Average velocity magnitude over the turn duration (V).

$$\overline{V}_i = \frac{(V_b + V_e)}{2} \text{ ft/sec} \quad \text{(Equation B 13)}$$

(E) Velocity vector path angle (γ_i) at turn epoch.

$$\gamma_i = \tan^{-1}\left[\frac{\dot{Z}_i}{\left(\dot{X}_i^2 + \dot{Y}_i^2\right)^{0.5}}\right] \quad \text{(Equation B14)}$$

(F) Launch vehicle position components at the end of turn duration.

$$X_{90L} = X_i + \nabla_i \cdot \Delta t \cdot \cos\left(\frac{-\theta}{2}\right) \cdot \cos(\gamma_i)$$

$$X_{90R} = X_i + \nabla_i \cdot \Delta t \cdot \cos\frac{\theta}{02} \cdot \cos(\gamma_i)$$

$$Y_{90L} = Y_i + \nabla_i \cdot \Delta t \cdot \sin\left(\frac{-\theta}{2}\right)$$

$$Y_{90R} = Y_i + \nabla_i \cdot \Delta t \cdot \sin\frac{\theta}{02}$$

$$Z_{90L} = Z_i + \nabla_i \cdot \Delta t \cdot co\left(\frac{-\theta}{2}\right) \cdot \sin(\gamma_i) - \left(\frac{1}{2}\right) g_1 \cdot \Delta t^2$$

$$Z_{90R} = Z_i + \nabla_i \cdot \Delta t \cdot co\left(\frac{\theta}{2}\right) \cdot \sin(\gamma_i) - \left(\frac{1}{2}\right) \cdot g_1 \cdot \Delta t^2 \qquad \text{(Equations B 15 – B20)}$$

Where:
g_1=32.17405 ft/sec.^{2}

(G) Launch vehicle velocity components at the end of turn duration.

$$\dot{X}_{90L} = (X_{90L} - X_i) / \Delta t$$
$$\dot{X}_{90R} = (X_{90R} - X_i) / \Delta t$$
$$\dot{X}_{90L} = |(X_{90L} - X_i) / \Delta t|$$
$$\dot{Y}_{90R} = (-1) \cdot |(Y_{90R} - Y_i) / \Delta t| \qquad \text{(Equations B21 – B26)}$$
$$\dot{Z}_{90L} = (Z_{90L} - Z_i) / \Delta t$$
$$\dot{Z}_{90R} = (Z_{90R} - Z_i) / \Delta t$$

(iv) An applicant shall rotate the trajectory state vector at the end of the turn duration to the right and left to define the right-lateral flight corridor boundary and the left-lateral flight corridor boundary, respectively. An applicant shall perform perform the trajectory rotation in conjunction with a trajectory transformation from the X_{90}, Y_{90}, Z_{90}, $\dot{X}_{90}$, $\dot{Y}_{90}$, $\dot{Z}_{90}$ components to E,N,U,$\dot{E}$,$\dot{N}$,$\dot{U}$. The trajectory subscripts ''R'' and ''L'' from equations B15 and B26 have been discarded to reduce the number of equations. An applicant shall transform from E,N,U,$\dot{E}$,$\dot{N}$,$\dot{U}$ to E,F,G,$\dot{E}$,$\dot{F}$,$\dot{G}$. An applicant shall use the equations of paragraph (d)(3)(iv)(A)–(F) to produce the EFG components necessary to estimate each instantaneous impact point.

(A) An applicant must calculate the flight angle (a).

$$\Delta\alpha_i = 3 - 2 \cdot f_1 \cdot (1 - F_{ri}) \text{ (Equation B27)}$$

$$\alpha_{Li} = (\text{Flight Azimuth} - \Delta\alpha_i)$$
for left lateral boundary computations (Equation B28)

or

$$\alpha_{Ri} = (\text{Flight Azimuth} + \Delta\alpha_i)$$
for right lateral boundary computations

$$f_1 = \begin{Bmatrix} 0.0 : F_{ri} \geq 0.8 \\ 1.0 : F_{ri} < 0.8 \end{Bmatrix} \qquad \text{(Equation B29)}$$

(B) An applicant shall transform X_{90}, Y_{90}, Z_{90} to E,N,U.

$$E = X_{90} \sin(\alpha) - Y_{90} \cos(a)$$
$$N = X_{90} \cos(\alpha) + Y_{90} \sin(\alpha)$$
$$U = Z_{90} \qquad \text{(Equation B30-32)}$$

(C) An applicant shall transform $\dot{X}_{90}$, $\dot{Y}_{90}$, $\dot{Z}_{90}$ to $\dot{E}_{90}$ to $\dot{E}, \dot{N}, \dot{U}$.

$$\dot{E} = \dot{X}_{90} \sin(a) - \dot{Y}_{90} \cos(\alpha)$$
$$\dot{N} = \dot{X}_{90} \cos(a) + \dot{Y}_{90} \sin(cx) \qquad \text{(Equation B33-B35)}$$
$$\dot{U} = \dot{Z}_{90}$$

(D) An applicant shall transform the launch point coordinates (Φ_o, λ_o, h_o) to E_o, F_o, G_o.

$$R = \alpha_E \left\{1 - e^2\left[\sin^2(\phi_0)\right]\right\}^{-0.5}$$
$$\text{where: } a_E = 20925646.3255 \text{ ft}$$
$$e^2 = 0.00669437999013 \qquad \text{(Equation B36-B39)}$$
$$E_0 = (R + h_0)\cos(\phi_0)\cos(\lambda_0)$$
$$F_0 = (R + h_0)\cos(\phi_0)\sin(\lambda_0)$$
$$G_0 = \left[R\left(1 - e^2\right) + h_0\right]\sin(\phi_0)$$

(E) An applicant shall transform E,N,U to E_{90}, F_{90}, G_{90}.

$$E_{90} = E\cos(270 - \lambda_0) + N\cos(90 - \phi_0)\sin(270 - \lambda_0) - U\sin(90 - \phi_0)\sin(270 - \lambda_0) + E_0$$
$$F_{90} = E\sin(270 - \lambda_0) + N\cos(90 - \phi_0)\cos(270 - \lambda_0) - U\sin(90 - \phi_0)\cos(270 - \lambda_0) + F_0$$
$$G_{90} = N\sin(90 - \phi_0) + U\cos(90 - \phi_0) + G_0 \qquad \text{(Equation B40-B42)}$$

(F) An applicant shall transform $\dot{E}, \dot{N}, \dot{U}$ to E.F.G.

$$\dot{E}_{90} = \dot{E}\cos(270 - \lambda_0) + \dot{N}\cos(90 - \phi_0)\sin(270 - \lambda_0) - \dot{U}\sin(90 - \phi_0)\sin(270 - \lambda_0)$$
$$\dot{F}_{90} = \dot{E}\sin(270 - \lambda_0) + \dot{N}\cos(90 - \phi_0)\cos(270 - \lambda_0) - \dot{U}\sin(90 - \phi_0)\cos(270 - \lambda_0)$$
$$\dot{G}_{90} = \dot{N}\sin(90 - \phi_0) + \dot{U}\cos(90 - \phi_0) \qquad \text{(Equation B43-B45)}$$

(v) The IIP computation implements an iterative solution to the impact point problem. An applicant shall solve Equations B46 to B69, with the appropriate substitutions. up to a maximum of five times. Each repetition of the equations provides a more accurate prediction of the IIP. The required IIP computations are shown in subsection (d)(3)(v)(A)–(W) below. An applicant shall use this computation for both the left- and right-lateral offsets. The IIP computations will result in latitude and longitude pairs for the left-lateral flight corridor boundary and the right-lateral flight corridor boundary. An applicant shall use the lines connecting the latitude and longitude pairs to describe the entire downrange area boundary of the flight corridor up to 5000 nm or a final stage impact dispersion area.

(A) An applicant shall approximate the radial distance ($\Gamma_{k,l}$) from the geoccnter to the IIP. The distance from the center of the earth ellipsoid to the launch point shall be used for the initial approximation of $r_{k,l}$ as shown in equation B46.

$$r_{k\cdot l} = \left(E_0^2 + F_0^2 + G_0^2\right)^{0.5} \qquad \text{(Equation B46)}$$

(B) An applicant shall compute the radial distance (r) from the geocenter to the launch vehicle position.

$$r = \left(E_{90}^2 + F_{90}^2 + G_{90}^2\right)^{0.5} \qquad \text{(Equation B47)}$$

If $r < r_{k,l}$ then the launch vehicle position is below the Earth's surface and an impact point cannot be computed. An applicant

must restart the calcuations with the next trajectory state vector.

(C) An applicant shall compute the inertial velocity components

$$\dot{E}I_{90} = \dot{E}_{90} - \omega \cdot F_{90}$$

$$\dot{F}I_{90} = \dot{F}_{90} + \omega \cdot E_{90} \quad \text{(Equation B48-49)}$$

Where:

$\omega = 4.178074 \times 10^{-3}$ deg/sec

(D) An applicant shall compute the magnitude-if the inertial velocity vector.

$$\text{“}I_0 = \left(\dot{E}I_{90}^2 + \dot{F}I_{90}^2 + \dot{G}_{90}^2\right)^{0.5} \quad \text{(Equation B50)}$$

(E) An applicant shall compute the eccentricity of the trajectory ellipse multiplied by the cosine of the eccentric anomaly at epoch. (ε_c).

$$\varepsilon_c = \left(\frac{r \cdot v_0^2}{K}\right) - 1 \quad \text{(Equation B5 1)}$$

Where:

$K = 1.407644 \times 10^{16}$ ft³/sec²

(F) An applicant shall compute the semi-major axis of the trajectory ellipse (a,).

$$a_r = \frac{r}{(1 - \varepsilon_c)} \quad \text{(Equation B52)}$$

If a, <0 or $a_t > \infty$ then the trajectory orbit is not elliptical, but is hyperbolic or parabolic, and an impact point cannot be computed. The launch vehicle has achieved escape velocity and the applicant may terminate commutations.

(G) An applicant shall compute the eccentricity of the trajectory ellipse multipled by the sine of the eccentric anomaly at epoch (ε_s).

$$\varepsilon_s = \frac{\left(E_{90}\dot{E}I_{90} + F_{90}\dot{F}I_{90} + G_{90}\dot{G}_{90}\right)}{\left(K \cdot a_t\right)^{0.5}} \quad \text{(Equation B53)}$$

(H) An applicant shall compute the eccentricity of the trajectory ellipse squared (ε^2).

$$\varepsilon^2 = \left(Ef + \varepsilon_s^2\right) \quad \text{(Equation B54)}$$

If $[a\tau(1-\varepsilon)-a\varepsilon]>0$ and $\varepsilon \geq 0$ then the trajectory perigee height is positive and an impact point cannot be computed. The launch vehicle has achieved earth orbit and the applicant may terminate computations.

(I) An applicant shall computer the eccentricity of the trajectory ellipse multiplied by the cosine of the eccentric anomaly at impact (ε_{c_k}).

$$\varepsilon_{c_k} = \frac{\left(a_t - r_{k.1}\right)}{a_t} \quad \text{(Equation B55)}$$

(J) An applicant shall compute the eccentrity of the trajectory ellipse multiplied by the sine of the eccentric anomaly at impact (ε_{s_k}).

$$\varepsilon_{s_k} = -\left(\varepsilon^2 - \varepsilon_{C_k}^2\right)^{0.5} \quad \text{(Equation B56)}$$

If $\varepsilon_{s_k} < 0$ then the trajectory orbit does not intersect the Earth's surface and an impact point cannot be computed. The launch vehicle has achieved earth orbit and the applicant may terminate computations.

(K) An applicant shall compute the cosine of the difference between the eccentric anomaly at impact and the eccentric anomaly at epoch ($\Delta\varepsilon_{c_k}$).

$$\Delta\varepsilon_{c_k} = \frac{\left(\varepsilon_{c_k} \cdot \varepsilon_c\right) + \left(\varepsilon_{s_k} \cdot \varepsilon_s\right)}{\varepsilon^2} \quad \text{(Equation B57)}$$

(L) An applicant shall compute the sine of the difference between the eccentric anomaly at impact and the eccentric anomaly at epoch $\Delta\varepsilon_{s_k}$).

$$\Delta\varepsilon_{s_k} = \frac{\left(\varepsilon_{s_k} \cdot \varepsilon_c\right) - \left(\varepsilon_{c_k} \cdot \varepsilon_s\right)}{\varepsilon^2} \quad \text{(Equation B58)}$$

(M) An applicant shall compute the f-series expansion of Kepler's equations.

$$f_2 = \frac{\left(\Delta\varepsilon_{c_k} - \varepsilon_c\right)}{(1 - \varepsilon_c)} \quad \text{(Equation B59)}$$

(N) An applicant shall compute the g-series expansion of Kepler's equations.

$$g_2 = \left(\Delta\varepsilon_{s_k} + \varepsilon_s - \varepsilon_{s_k}\right)\left(\frac{a_t^3}{K}\right)^{0.5} \quad \text{(Equation B60)}$$

(0) An applicant shall compute the E,F,G coordinates at impact (E_i,F_i,G_i).

$$E_k = f_2 \cdot E_{90} + g_2 \cdot \dot{E}I_{90}$$
$$F_k = f_2 \cdot F_{90} + g_2 \cdot \dot{F}I_{90}$$
$$G_k = f_2 \cdot G_{90} + g_2 \cdot \dot{G}_{90} \qquad \text{(Equation B61- B63)}$$

(P) An applicant shall approximate the distance from the geocenter to the launch vehicle position at impact ($r_{k,2}$).

$$r_{k\cdot 2} = \frac{a_E}{\left[\left(\frac{e^2}{1-e^2}\right)\left(\frac{G_k}{r_{k\cdot 1}}\right)^2 + 1\right]^{0.5}} \qquad \text{(Equation B64)}$$

Where:
a_E=20925646.3255 ft
e^2=0.00669437999013

(Q) An applicant shall let $r_{k+1,1}=r_{k,2}$, substitute $r_{k+1,1}$ for $r_{k,1}$ in equation B55 and repeat equations B55–B64 up to four more times incrementing "k" by one on each loop (e.g. $k\varepsilon\{1, 2.3. 4. 5\}$). If $|r_{5,1} - r_{5,2}|>1$ then the iterative solution does not converge and an impact point does not meet the accuracy tolerance of plus or minus one foot. An applicant must try more iterations, or restart the calculations with the next trajectory state vector.

(R) An applicant shall compute the difference between the eccentric anomaly at impact and the eccentric anomaly at epoch ($\Delta\varepsilon$).

$$\Delta\varepsilon = \tan^{-1}\left(\frac{\Delta\varepsilon_{v_5}}{\Delta\varepsilon_{c_5}}\right) \qquad \text{(Equation B65)}$$

(S) An applicant shall compute the time of flight from epoch to impact (t).

$$t = \left(\Delta\varepsilon + \varepsilon_s - \varepsilon_{s_5}\right)\left(\frac{\alpha_t^3}{K}\right)^{0.5} \qquad \text{(Equation B66)}$$

(T) An applicant shall compute the geocentric latitude at impact (ϕ').

$$\phi_i' = \sin^{-1}\left(\frac{G_5}{r_{5.2}}\right) \qquad \text{(Equation B67)}$$

Where:
$+90° \geq \phi'_i \geq -90°$

(U) An applicant shall compute the deodetic latitude at impact (ϕ).

$$\phi_i = \tan^{-1}\left[\frac{\tan(\phi_i')}{(1-e^2)}\right] \qquad \text{(Equation B68)}$$

Where:
$+90° \geq \phi'_i \geq -90°$

(V) An applicant shall compute the East longitude at impact (λ).

$$\lambda_i = \tan^{-1}\left(\frac{F_5}{E_5}\right) - \omega t \qquad \text{(Equation B69)}$$

(W) If the range from the launch point to the impact point is equal to or greater than 5000nm. an applicant shall terminate IIP computations.

(4) For a guided suborbital launch vehicle, an applicant shall define a final stage impact dispersion area as part of the flight corridor and show the area on a map using the following procedure:

(i) For equation B70 below, an applicant shall use an apogee altitude (H_{ap}) corresponding to the highest altitude reached by the launch vehicle final stage in the applicant's launch vehicle trajectory analysis done in accordance with paragraph (b)(1)(ii).

(ii) An applicant shall define the final stage impact dispersion area by using a dispersion factor [DISP(H_{ap})] as shown below. An applicant shall calculate the impact dispersion radius (R) for the final launch vehicle stage. An applicant shall set R equal to the maximum apogee altitude (H_{ap}) multiplied by the dispersion factor as shown below:

$$R = H_{ap} \cdot \mathrm{DISP}\left(H_{ap}\right) \qquad \text{(Equation B70)}$$

Where:
DISP(H_{ap}) =0.05

(5) An applicant shall combine the launch area and downrange area flight corridor and any final stage impact dispersion area for a guided suborbital launch vehicle.

(i) On the same map with the launch area flight corridor, an applicant shall plot the latitude and longitude positions of the left and right sides of the downrange area of the flight corridor calculated in subparagraph (d)(3).

(ii) An applicant shall connect the latitude and longitude positions of the left side of the downrange area of the flight corridor sequentially starting with the last IIP calculated on the left side and ending with the first IIP calculated on the left side. An applicant shall repeat this procedure for the right side.

(iii) An applicant shall connect the left sides of the launch area and downrange portions of the flight corridor. An applicant shall repeat this procedure for the right side.

(iv) An applicant shall plot the overflight exclusion zone defined in subparagraph (c)(7).

(v) An applicant shall draw any impact dispersion area on the downrange map with the center of the impact dispersion area on the launch vehicle final stage point obtained from the applicant's launch vehicle trajectory analysis done in accordance with subparagraph (b)(1)(ii).

(e) Evaluate the Launch Site

(1) An applicant shall evaluate the flight corridor for the presence of populated areas. If no populated area is located within the flight corridor, then no additional steps are necessary.

(2) If a populated area is located in an overflight exclusion zone, an applicant may modify its proposal or demonstrate that there are times when no people are present or that the applicant has an agreement in place to evacuate the public from the overflight exclusion zone during a launch.

(3) If a populated area is located within the flight corridor, an applicant may modify its proposal or complete an overflight risk analysis as provided in appendix C.

Appendix C to Part 420-Risk Analysis

(a) Introduction

(1) This appendix provides a method for an applicant to estimate the expected casualty (E,) for a launch of a guided launch vehicle using a flight corridor generated either by appendix A or appendix B. This appendix also provides an applicant options to simplify the method where population at risk is minimal.

(2) An applicant shall perform a risk analysis when a populated area is located within a flight corridor defined by either

appendix A or appendix B. If the estimated expected casualty exceeds 30x10-6, an applicant may either modify its proposal, or if the flight corridor used was generated by the appendix A method, use the appendix B method to narrow the flight corridor and then redo the overflight risk analysis pursuant to this appendix C. If the estimated expected casualty still exceeds 30x10-6, the FAA will not approve the location of the proposed launch point.

(b) Data Requirements

(1) An applicant shall obtain the data specified in subparagraphs (b)(2) and (3) and summarized in table C-l, Table C-l provides sources where an applicant may obtain data acceptable to the FAA. An applicant will also employ the flight corridor information from appendix A or B, including flight azimuth and, for an appendix B flight corridor, trajectory information.

(2) Population Data. Total population (N) and the total landmass area within a populated area (A) are required. Population data up to and including 100 nm from the launch point are required at the U.S. census block group level. Population data downrange from 100 nm are required at no greater than 1°×1° latitude/longitude grid coordinates.

(3) Launch Vehicle Data. These data consist of the launch vehicle failure probability (P_f), the launch vehicle effective casualty area (A,). trajectory position data. and the overflight dwell time (t_d). The failure probability is a constant (P_f=0.10) for a guided orbital or suborbital launch vehicle. Table C-3 provides effective casualty area data based on IIP range. Trajectory position information is provided from distance computations given in this appendix for an appendix A flight corridor, or trajectory data used in appendix B for an appendix B flight corridor. The dwell time (t_d) may be determined from trajectory data produced when creating an appendix B flight corridor.

TABLE C-I .-OVERFLIGHT ANALYSIS DATA REQUIREMENTS

Data category	Data item	Data source
Population Data	Total population within a populated area (N).	Within 100 nm of the launch point: U.S. census data at the census block-group level. Downrange from 100 nm beyond the launch point, world population data are available from:
	Total landmass area within the populated area (A).	Carbon Dioxide Information Analysis Center (CDIAC). Oak Ridge National Laboratory. Database-Global Population Distribution (1990), Terrestrial Area and Country Name Information on a One by One Degree Grid Cell Basis (DB1016 (8–1996)).
Launch Vehicle Data	Failure probability—P_f=0.10	N/A.
	Effective casualty area (A_c)	See table C-3.
	Overflight dwell time	Determined by range from the launch point or trajectory used by applicant.
	Nominal Trajectory Data (for an appendix B flight corridor only).	See appendix B, table El.

(c) Estimating Corridor Casualty Expectation

(1) A corridor casualty expectation [E(Corridor)] estimate is the sum of the expected casualty measurement of each populated area inside a flight corridor.

(2) An applicant shall identify and locate each populated area in the proposed flight corridor.

(3) An applicant shall determine the probability of impact in each populated area using the procedures in subparagraphs (5) or (6) of this paragraph. Figures C-l and C-2 show an area considered for probability of impact (P_i) computations by the dashed-lined box around the populated area within a flight corridor, and figure C-3 shows a populated area in a final stage impact dispersion area. An applicant shall then estimate the E_c for each populated area using the procedures in subparagraphs (7) and (8) of this paragraph.

(4) The P, computations do not directly account for populated areas whose areas arc bisected by an appendix A flight corridor centerline or an appendix B nominal trajectory ground trace. Accordingly, an applicant must evaluate P, for each of the bisections as two separate populated area, as shown in figure C-4, which shows one bisection to the left of an appendix A flight corridor's centerline and one on its right.

(5) Probability of Impact (P_i) Computations for a Populated Area in an appendix A Flight Corridor. An applicant shall computer P,. for each populated area using the following method:

(i) For the launch and downrange areas, but not a final stage impact dispersion area for a guided suborbital launch vehicle, an applicant shall compute P_i, for each populated area using the following equation:

$$P_i = \frac{\left(\frac{|y_2 - y_1|}{\sigma_y}\right)}{6\sqrt{2\pi}} \left[\exp\left(\frac{-\left(\gamma_1/\sigma_\gamma\right)^2}{2}\right) + 4 \cdot \exp\left(\frac{-\left(\frac{y_1 + y_2}{2\sigma_y}\right)^2}{2}\right) + \exp\left(\frac{-\left(\gamma_2/\sigma_\gamma\right)^2}{2}\right) \right] \cdot \left[\frac{P_f}{C} \cdot \frac{(x_2 - x_1)}{R}\right] \quad \text{(Equation C1)}$$

Where:

x_1, x_2 = closest and farthest downrange distance (nm) along the flight corridor centerline to the populated area (see figure C-l)

y_1, y_2 = closest and farthest cross range distance (nm) to the populated area measured from the flight corridor centerline (see figure C-l)

σ_y = one-fifth of the cross range distance from the centerline to the flight corridor boundary (see figure C-l)

exp = exponential function (e^x)

P_f = probability of failure = 0.10

R = IIP range rate (nm/sec) (see table C-2)

C = 643 seconds (constant)

TABLE C–2.—IIP RANGE RATE vs. IIP RANGE

IIP range (nm)	IIP range rate (nm/s)
0–75	0.75
76–300	1.73
301–900	4.25
901–1700	8.85
1701–2600	19.75

TABLE C–2.—IIP RANGE RATE VS. IIP RANGE-Continued

IIP range (nm)	IIP range rate (nm/s)
2601-3500	42.45
3500–4500	84.85
4501–5250	154.95

(ii) For each populated area within a final stage impact dispersion area, an applicant shall compute P_i using the following method:

(A) An applicant shall estimate the probability of final stage impact in the x and y sectors of each populated area within the final stage impact dispersion area using equations C2 and C3:

$$P_x = \frac{\left(\frac{|x_2 - x_1|}{\sigma_x}\right)}{6\sqrt{2\pi}} \left[\exp\left(\frac{-\left(x_1/\sigma_x\right)^2}{2}\right) + 4 \cdot \exp\left[\frac{-\left(\frac{x_1 + x_2}{2\sigma_x}\right)^2}{2}\right] + \exp\left(\frac{-\left(x_2/\sigma_x\right)^2}{2}\right) \right] \quad \text{(Equation C2)}$$

Where:

x_1, x_2 = closest and farthest downrange distance, measured along the flight corridor centerline, measured from the nominal impact ooint to the populated area (see figure 6-3)

σ_x = one-fifth of the impact dispersion radius (see figure C-3)

exo = exponential function (e^x)

$$P_y = \frac{\left(\frac{|y_2 - y_1|}{\sigma_y}\right)}{6\sqrt{2\pi}} \left(\exp\left(\frac{-\left(\gamma_1/\sigma_\gamma\right)^2}{2}\right) + 4 \cdot \exp\left[\frac{-\left(\frac{y_1}{2\sigma_y}\right)^2}{2}\right] + \exp\left(\frac{-\left(\gamma_2/\sigma_\gamma\right)^2}{2}\right) \right) \quad \text{(Equation C3)}$$

Where:

y_1, y_2 = closest and farthest cross range distance to the populated area measured from the flight corridor centerline (see figure C-3)

σ_y = one-fifth of the impact dispersion radius (see figure C-3)

exp = exponential function (e^x)

(B) If a populated area intersects the impact dispersion area boundary so that the x_2 or y_2 distance would otherwise extend outside the impact dispersion area, the x_2 or y_2 distance should be set equal to the impact dispersion area radius. The x_2 distance for populated area A in figure C-3 is an example. If a populated area intersects the flight azimuth, an applicant shall solve equation C3 by obtaining the solution in two parts. An applicant shall determine, first, the probability between $y_1 = 0$ and $y_2 = a$ and, second, the probability between $y_1 = 0$ and $y_2 = b$. as depicted in figure C-4. The probability P_y is then equal to the sum of the probabilities of the two parts. If a populated area interests the line that is normal to the flight azimuth on the impact point, an applicant shall solve equation C2 by obtaining the solution in two parts in a similar manner with the values of x.

(C) An applicant shall calculate the probability of impact for each populated area using equation C4 below:

$$P_i = P_s \cdot P_x \cdot P_y \quad \text{(Equation C4)}$$

Where:

$P_s = 1 - P_f = 0.90$

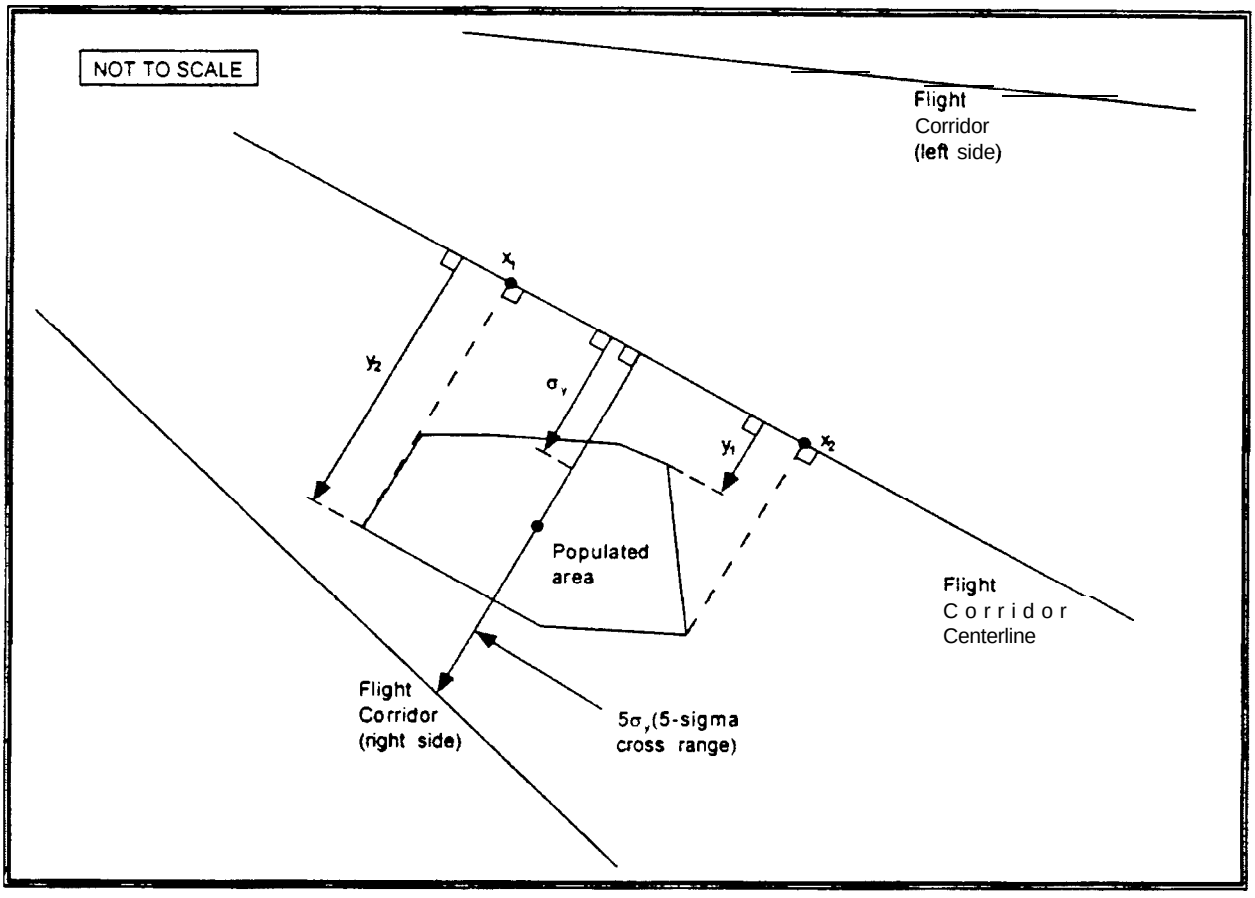

Figure C-l: Analysis of an Appendix A Flight Corridor

(6) Probability of Impact Computations for a Populated Area in an appendix B Flight Corridor. An applicant shall compute P, using the following method:

(i) For the launch and downrange areas, but not a final stage impact dispersion area for a guided suborbital launch vehicle, an applicant shall compute P_i for each populated area using the following equation:

$$P_i = \frac{\left(\frac{|y_2 - y_1|}{\sigma_y}\right)}{6\sqrt{2\pi}} \left(\exp\left(\frac{-\left(\gamma_1/\sigma_y\right)^2}{2} \right) + 4 \cdot \exp\left[\frac{-\left(\frac{y_1 + y_2}{2\sigma_y}\right)^2}{2} \right] + \exp\left(\frac{-\left(\gamma_2/\sigma_y\right)^2}{2} \right) \right) \cdot \left(\frac{P_f}{t} \cdot t_d \right) \qquad \text{(Equation C5)}$$

Where:

y_1, y_2 = closest and farthest cross range distance (nm) to a populated area measured from the nominal trajectory IIP ground trace (see figure C-2)

σ_y = one-fifth of the cross range distance (nm) from nominal trajectory to the flight corridor boundary (see figure C-Z)

exp = exponential function (e^x)

P_f = probability of failure = 0.10

t = flight time from lift-off to orbital insertion (seconds)

t_d = overflight dwell time (seconds)

(ii) For each populated area within a final stage impact dispersion area, an applicant shall compute P, using the following method:

(A) An applicant shall estimate the probability of final stage impact in the x and y sectors of each populated area within the final stage impact dispersion area using equations C6 and C7:

$$P_x = \frac{\left(\frac{|x_2 - x_1|}{\sigma_x}\right)}{6\sqrt{2\pi}} \left[\exp\left(\frac{-\left(x_1/\sigma_x\right)^2}{2}\right) + 4 \cdot \exp\left[\frac{-\left(\frac{x_1 + x_2}{2\sigma_x}\right)^2}{2}\right] + \exp\left(\frac{-\left(x_2/\sigma_x\right)^2}{2}\right)\right] \quad \text{(Equation C6)}$$

Where:

x_1, x_2 = closest and farthest downrange distance, measured along nominal trajectory IIP ground trace, measured from the nominal impact point to the populated area (see figure C-3)

σ_x = one-fifth of the impact dispersion radius (see figure C-3)

exp = exponential function (e^x)

$$P_y = \frac{\left(\frac{|y_2 - y_1|}{\sigma_y}\right)}{6\sqrt{2\pi}} \left[\exp\left(\frac{-\left(\gamma_1/\sigma_\gamma\right)^2}{2}\right) + 4 \cdot \exp\left[\frac{-\left(\frac{y_1 + y_2}{2\sigma_y}\right)^2}{2}\right] + \exp\left(\frac{-\left(\gamma_2/\sigma_\gamma\right)^2}{2}\right)\right] \quad \text{(Equation C7)}$$

Where:

y_1, y_2 = closest and farthest cross range distance to the populated area measured form the nominal trajectory IIP ground trace (see figure C-3)

σ_y = one-fifth of the impact dispersion radius (see figure C-3)

exp = exponential function (e^x)

(B) If a populated area intersects the impact dispersion area boundary so that the x_2 or y_2 distance would otherwise extend outside the impact dispersion area, the x_2 or y_2 distance should be set equal to the impact dispersion area radius. The x_2 distance for populated area A in figure C-3 is an example. If a populated area intersects the flight azimuth, an applicant shall solve equation C7 by obtaining the solution in two parts. An applicant shall determine, first, the probability between $y_1 = 0$ and $y_2 = a$ and, second, the probability between $y_1 = 0$ and $y_2 = b$, as depicted in figure C-4. The probability P_y is then equal to the sum of the probabilities of the two parts. If a populated area interests the line that is normal to the flight azimuth on the impact point, an applicant shall solve equation C6 by obtaining the solution in two parts in a similar manner with the values of x.

(C) An applicant shall calculate the probability of impact for each populated area using equation C8 below:

$$P_i = P_s \cdot P_x \cdot P_y \quad \text{(Equation C8)}$$

Where:

$P_s = 1 - P_f = 0.90$

BILLING CODE 4910–13–M

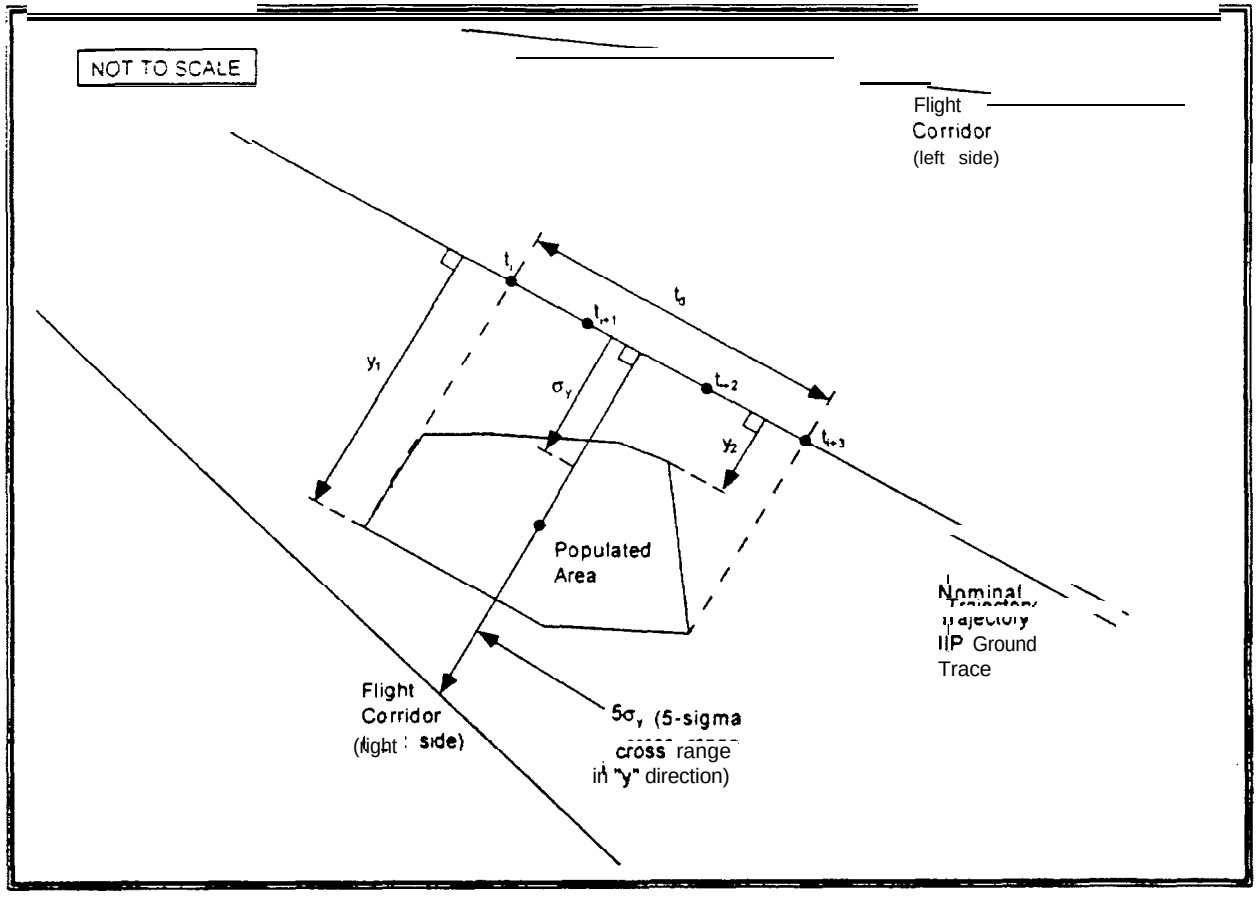

Figure C-2: Analysis of an Appendix B Flight Corridor

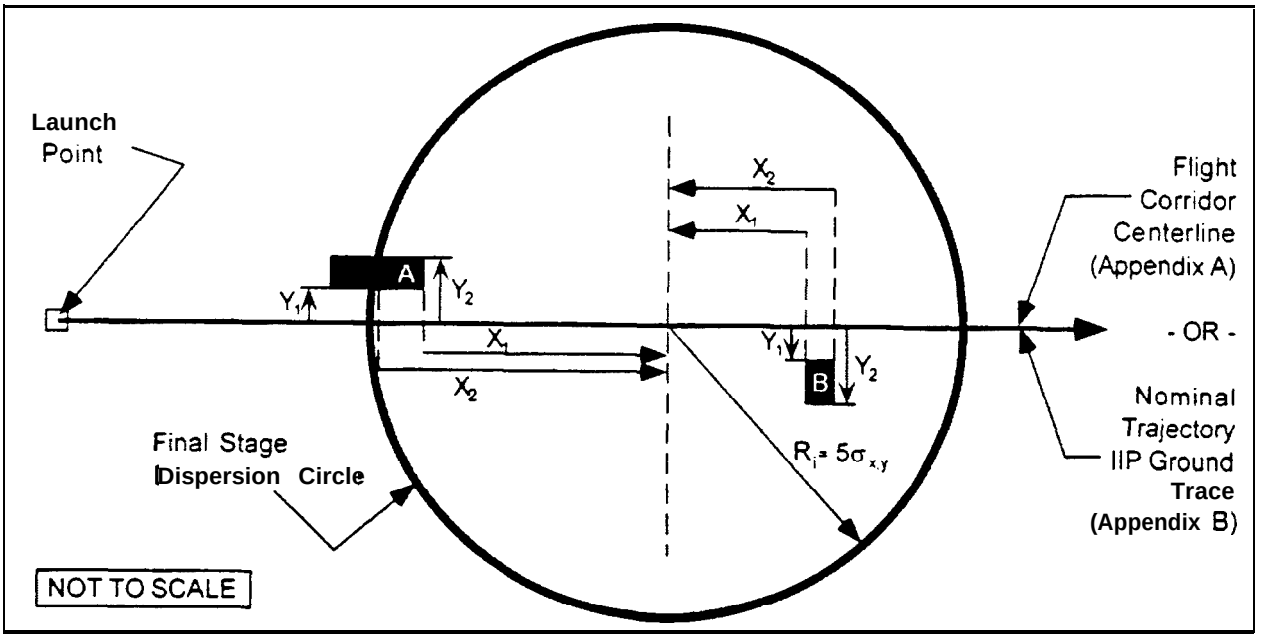

Figure C-3: Appendix A and B Final Stage Impact Risk Analysis

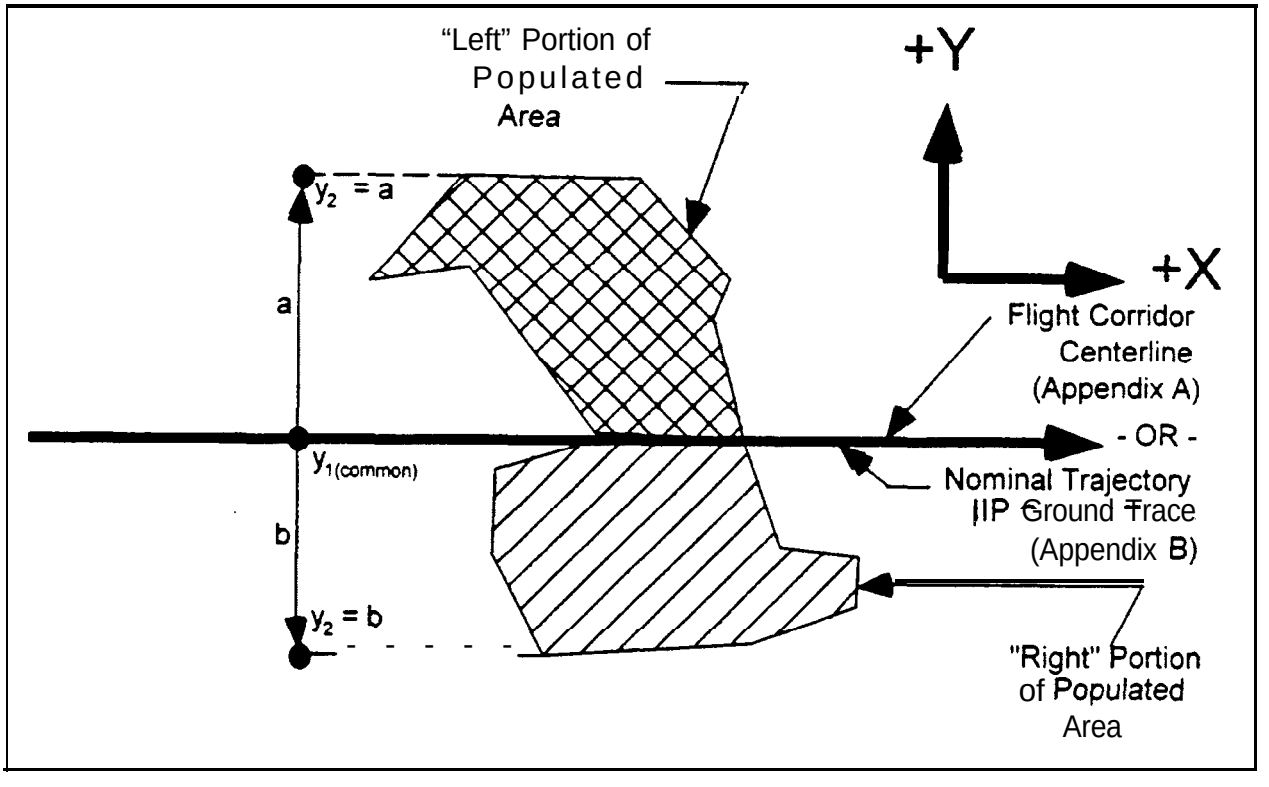

Figure C-4: Fiight Azimuth Intersecting a Populated Area

BILLING CODE 4910-13-C

(7) Using the P_i calculated in either subparagraph (c) (5) or (6) of this paragraph, an applicant shall calculate the casualty expectancy for each populated area within the flight corridor. E_{ck} is the casualty expectancy for a given populated area as shown in equation C9, where individual populated areas are designated with the subscript "k".

$$E_{ck} = P_i \cdot \left(\frac{A_c}{A_k}\right) \cdot N_k \qquad \text{(Equation C9)}$$

Where:
A, = casualty area (from table C-3)
A_k = populated area
N_k = population in A_k

TABLE C–3—EFFECTIVE CASUALTY AREA (MILES²) VS. IIP Range (nm)

IIP Range (nmi)	Orbital launch vehicles				Suborbital launch vehicles
	Small	Medium	Medium large	Large	Guided
0–49	0.43	0.53	0.71	1.94	0.43
50–1749	0.13	0.0022	0.11	0.62	0.13
1750–5000	3.59×10^{-6}	8.3×10^{-4}	1.08×10^{-1}	7.17×10^{-1}	3.59×10^{-6}

(8) An applicant shall estimate the total corridor risk using the following summation of risk, including a multiplier of two, as shown in equation C10.

$$Ec(\text{Corridor}) = 2 \cdot \left(\sum_{k=1}^{n} E_{c_k}\right) \qquad \text{(Equation C 10)}$$

(9) Alternative Casualty Expectancy (E_c) Analyses. An applicant may employ specified variations to the analysis defined in subparagraphs (c)(l)-(8). Those variations are identified in subparagraphs (9) (i) through (vi) of this paragraph. Subparagraphs (i) through (iv) permits an applicant to make conservative assumptions that would lead to an overestimation of the corridor E_c compared with the analysis defined in subparagraphs (c)(l)-(8). In subparagraphs (v) and (vi). an applicant that would othenvise fail the analysis prescribed by subparagraphs (c)(1)–(8) may avoid (c)(l)-(8)'s overestimation of the probability of impact in each populated area. An applicant employing a variation shall identify the variation used, show and discuss the specific assumptions made to a modify the analysis defined in subparagraphs (c)(1)–(8), and demonstrate how each assumption leads to overestimation of the corridor E_c compared with the analysis defined in subparagraphs (c)(1)–(c)(8).

(i) Assume that P_x and P, have a value of 1 .0 for all populated areas.

(ii) Combine populated areas into one or more larger populated areas, and use a population density for the combined area or areas equal to the most dense populated area.

(iii) for any given populated area, assume P_y has a value of one.

(iv) For any given P_x sector (an area spanning the width of a flight corridor and bounded by two time points on the trajectory IIP ground trace) P, has a value of one and use a population density for the sector equal to the most dense populated area.

(v) For a given populated area, divided the populated area into smaller rectangles, determined P, for each individual rectangle. and sum the individual impact probabilities to determine P_i for thee entire populated area.

(vi) For a given populated area. use the ratio of the populated area to the area of the P_i rectangle from the subparagraph (c)(l)-(8) analysis.

(d) Evaluation of Results

(1) If the estimated expected casualty does not exceed 30 x 10^{-6}, the FAA will approve the launch site location.

(2) If the estimated expected casualty exceeds 30x 10^{-6}, then an applicant may either modify its proposal, or, if the flight corridor used was generated by the appendix A method, use the appendix B method to narrow the flight corridor and then perform another appendix C risk analysis.

Appendix D to Part 420—Impact Dispersion Area and Casualty Expectancy Estimate for an Unguided Suborbital Launch Vehicle

(a) Introduction

(1) This appendix provides an method for determining the acceptability of the location of a launch point from which an unguided suborbital launch vehicle would be launched. The appendix describes how to define an overflight exclusion zone and impact dispersion areas, and how to evaluate whether the public risk presented by the launch of an unguided suborbital launch vehicle remains at acceptable levels.

(2) An applicant shall base its analysis on an unguided suborbital launch vehicle whose final launch vehicle stage apogee represents the intended use of the launch point.

(3) An applicant shall use the apogee of each stage of an existing unguided suborbital launch vehicle with a final launch vehicle stage apogee equal to the one proposed, and calculate each impact range and dispersion area using the equations provided.

(4) This appendix also provides a method of performing an impact risk analysis that estimates the expected casualty (E_c) within each impact dispersion area. This appendix provides an applicant options to simplify the method where population at risk is minimal.

(5) If the E_c is less than or equal to 30x 10^{-6}, the FAA will approve the launch point for unguided suborbital launch vehicles. If the E_c exceeds 30 x 10^{-6}, the proposed launch point will fail the launch site location review.

(b) Data Requirements

(1) An applicant shall employ the apogee of each stage of an existing unguided suborbital launch vehicle whose final stage apogee represents the maximum altitude to be reached by unguided suborbital launch vehicles launched from the launch point. The apogee shall be obtained from one or more actual flights of an unguided suborbital launch vehicle launched at an 84 degree elevation.

(2) An applicant shall satisfy the map and plotting data requirements in appendix A, paragraph (b).

(3) Population Data. An applicant shall use total population (N) and the total landmass are within a populated area (A) for all populated areas within an impact dispersion area. Population data up to and including 100 nm from the launch point are required at the U.S. census block group level. Population data downrange from 100 nm are required at no greater than 1" x 1° latitude/longitude grid coordinates.

(c) Overflight Exclusion Zone and Impact Dispersion Area

(1) An applicant shall choose a flight azimuth from a launch point.

(2) An applicant shall define an overflight exclusion zone as a circle with a radius of 1600 feet centered on the launch point.

(3) An applicant shall define an impact dispersion area for each stage of the suborbital launch vehicle chosen in subparagraph (b)(1) as provided below:

(i) An applicant shall calculate the impact range for the final launch vehicle stage (D_n). An applicant shall set D_n equal to the last

stage apogee altitude (H_i) multiplied by an impact range factor [$IP(H_n)$] as shown below:

$$D_n = H_n \cdot IP(H_n) \qquad \text{(Equation D 1)}$$

Where:

$IP(H_n)$=0.4 for an apogee less than 100 km, and

$IP(H_n)$=0.7 for an apogee 100 km or greater.

(ii) An applicant shall calculate the impact range for each intermediate stage (D_i), where $i \varepsilon \{1, 2, 3, (n-1)\}$, and where n is the total number of launch vehicle stages. Using the apogee altitude (H_i) of each intermediate stage, an applicant shall used equation D1 to compute the impact range of each stage by substituting H_i for H_n. An applicant shall use the impact range factors provided in equation D1.

(iii) An applicant shall calculate the impact dispersion radius for the final launch vehicle stage (R_n). An applicant shall set R_n equal to the last stage apogee altitude (H_n) multiplied by an impact dispersion factor [$DISP(H_n)$] as shown below:

$$R_n = H_n \cdot DISP(H_n) \qquad \text{(Equation D2)}$$

Where:

$DISP(H_n)$=0.4 for an apogee less than 100 km, and

$DISP(H_n)$=0.7 for an apogee 100 km or greater

(iv) An applicant shall calculate the impact range for each intermediate stage (R_i), where $i \varepsilon \{1, 2, 3, (n-1)\}$, and where n is the total number of launch vehicle stages. Using the apogee altitude (H_i) of each intermediate stage, an applicant shall used equation D2 to compute impact dispression radius of each stage by substituting H_i for H_n. An applicant shall use the dispersion factors provided in equation D2.

(4) An applicant shall display an oversflight exclusion zone, each intermediate and final stage impact point (D_i through D_n), and each impact dispersion area for the intermediate and final launch vehicle stages on maps in accordance with paragraph (b)(2).

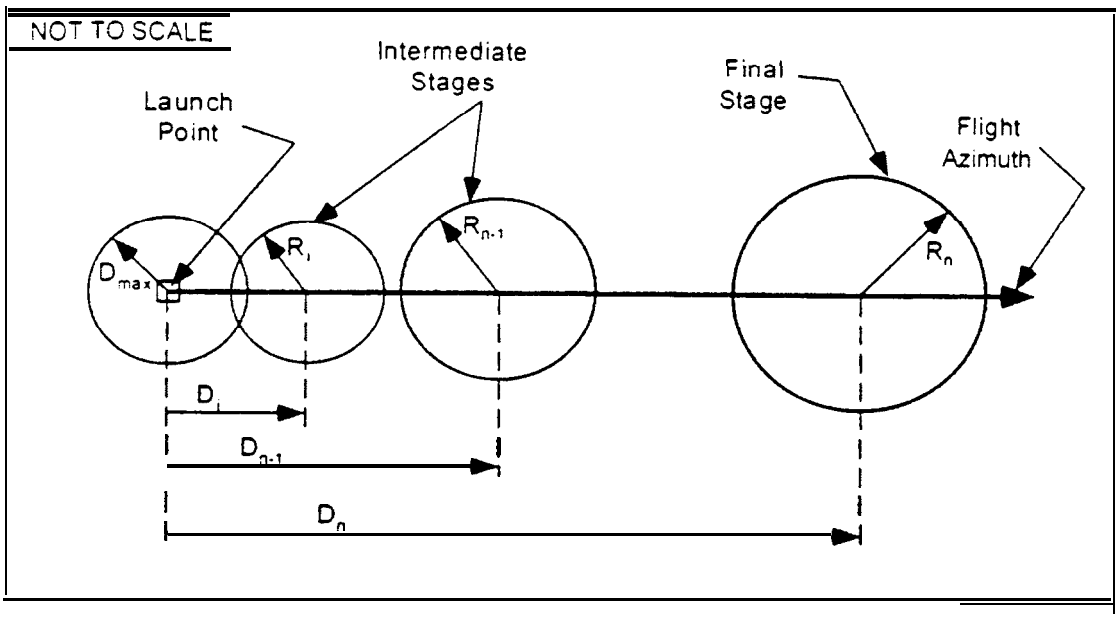

Figure D-l
Unguided Suborbital Launch Vehicle Overflight Exclusion Zone and Impact Dispersion Areas

(d) Evaluate the Overflight Exclusion Zone and Impact *Dispersion Areas*

(1) An applicant shall evaluate the overflight exclusion zone and each impact dispersion area for the presence of any populated areas. If an applicant determines that no populated area is located within the overflight exclusion zone or any impact dispersion area, then no additional steps are necessary.

(2) If a populated area is located in an overflight exclusion zone. an applicant may modify its proposal or demonstrate that there are times when no people are present or that the applicant has an agreement in place to evacuate the public from the overflight exclusion zone during a launch.

(3) If a populated area is located within any impact dispersion area, an applicant may modify its proposal and defined a new exclusion zone and new impact dispersion areas, or perform an impact risk analysis as provided in paragraph (e).

(e) Impact Risk Analysis

(1) An applicant shall estimate the expected average number of casualties. E_C, within the impact dispersion areas according to the following method:

(i) An applicant shall calculate the E_c by summing the impact risk for the impact dispersion areas of the final launch vehicle stage and all intermediate stages. An applicant shall estimate E_c for the impact dispersion area of each stage by using equation D3 through D7 for each of the populated areas located within the impact dispersion areas.

(ii) An applicant shall estimate the probability of impacting inside the X and Y sectors of each populated area within each impact dispersion area using equations D3 and D4 below:

$$P_x = \frac{\left(\frac{x_2 - x_1}{\sigma_x}\right)}{6\sqrt{2\pi}} \left[\exp\left[\frac{-\left(\frac{x_1}{\sigma_x}\right)^2}{2}\right] + 4 \cdot \exp\left[\frac{-\left(\frac{x_1 + x_2}{2\sigma_x}\right)^2}{2}\right] + \exp\left(\frac{-\left(\frac{x_2}{\sigma_x}\right)^2}{2}\right)\right] \quad \text{(Equation D3)}$$

Where:

x_1, x_2=closest and farthest downrange distance to populated area (see figure D-2)

σ_x=one-fifth of the impact dispersion radius (see figure D-2)

exp=exponential function (e^x)

$$P_y = \frac{\left(\frac{|y_2| \quad |y_1|}{\sigma_y \quad \sigma_\gamma}\right)}{6\sqrt{2\pi}} \left[\exp\left(\frac{-\left(\gamma_1/\sigma_\gamma\right)^2}{2}\right) + 4 \cdot \exp\left[\frac{-\left(\frac{y_1 + y_2}{2\sigma_y}\right)^2}{2}\right] + \exp\left(\frac{-\left(\gamma_2/\sigma_\gamma\right)^2}{2}\right)\right] \quad \text{(Equation D4)}$$

Where:

y_1, y_2=closest and farthest cross range distance to the populated area (see figure D-2)

σ_y=one-fifth of the impact dispersion radius (see figure D-2)

exp=exponential function (e^x)

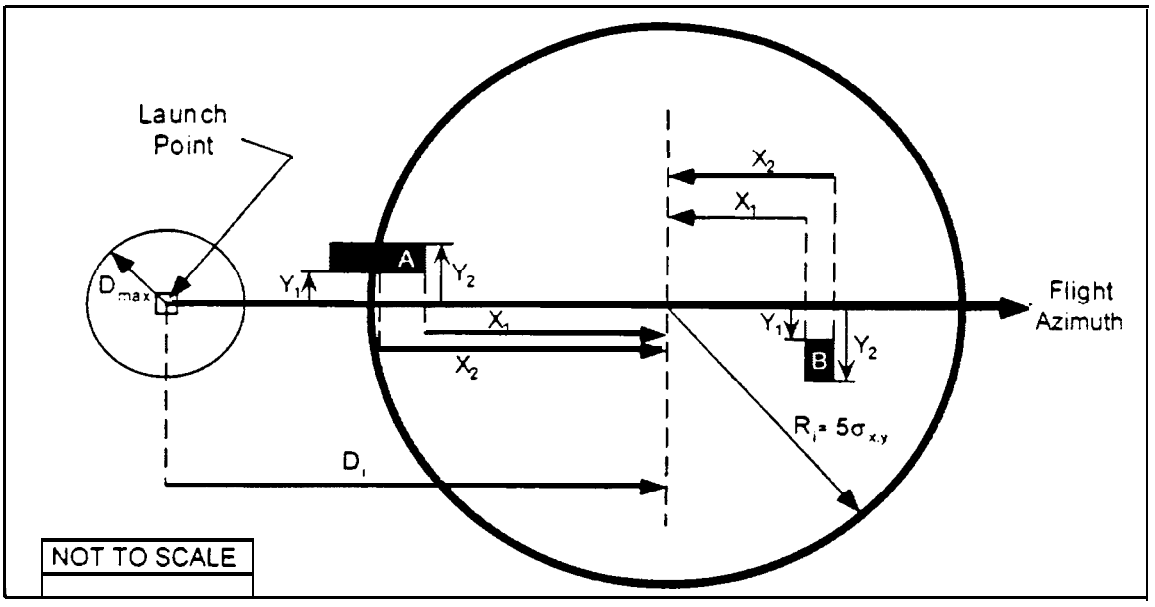

Figure D-2
Intermediate and Final Stage Impact Risk Analysis

(iii) If a populated area intersects the impact dispersion area boundary so that the x_2 or y_2 distance would othenvise extend outside the impact dispersion area, the x_2 or y_2 distance should be set equal to the impact dispersion area radius. The x_2 distance for populated area A in figure D-Z is an example.

(iv) If a populated area intersects the flight azimuth, an applicant shall solve equation D4 by obtaining the solution in two parts. An applicant shall determine. first, the probability between y_1=0 and y_2=a and, second, the probability between y_1=0 and y_2=b, as depicted in figure D-3. The probability P_y is then equal to the sum of the probabilities of the two parts. If a populated area intersects the line that is normal to the flight azimuth on the impact point, an applicant shall solve equation D3 by obtaining the solution in two parts in the same manner as with the values of x.

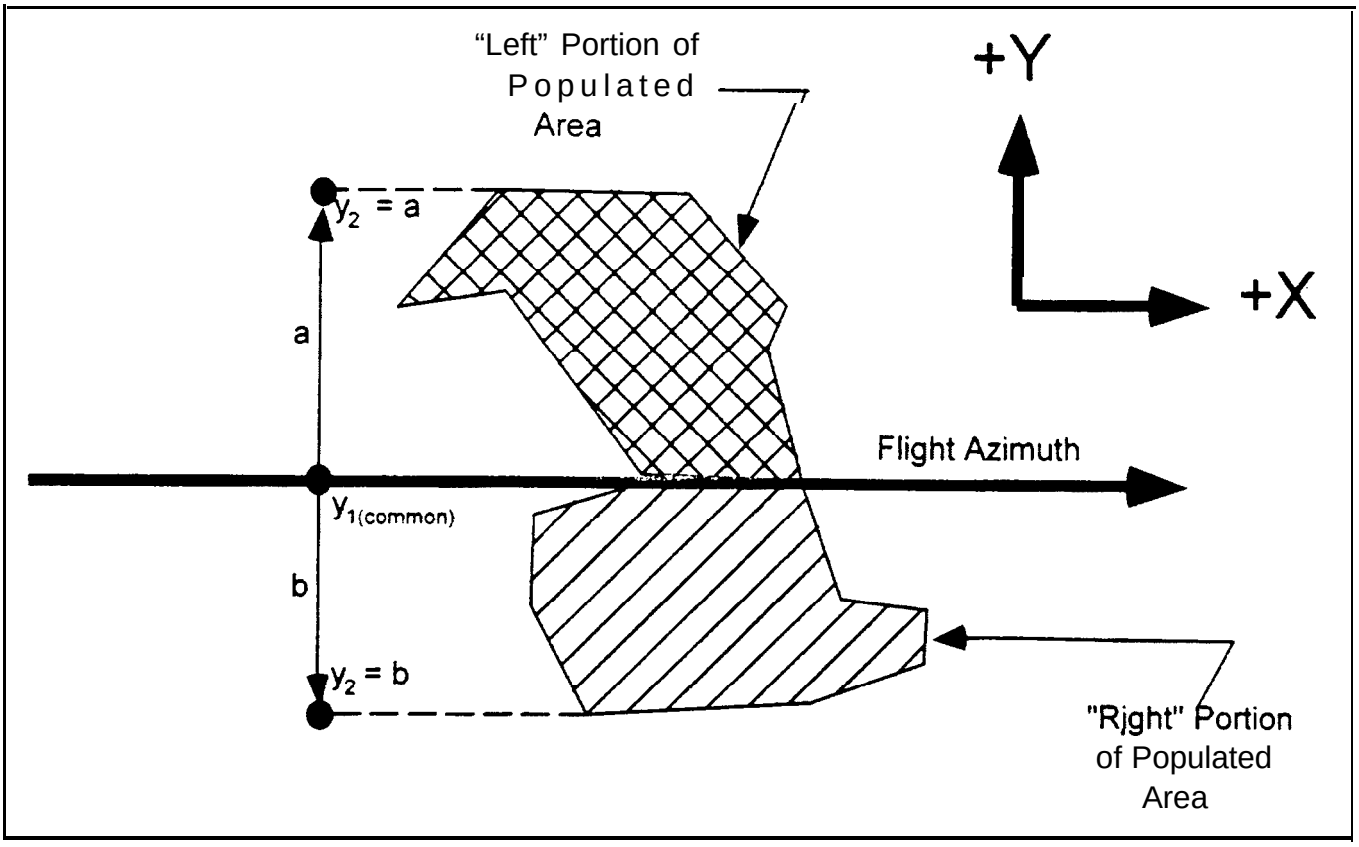

Figure D-3
Flight Azimuth Intersecting a Populated Area

(v) An applicant shall calculate the probability of impact (P_i) for each populated area using the following equation:

$$P_i = P_s P_x \cdot P, \qquad \text{(Equation D5)}$$

Where:

P_s=probability of success=0.98

(vi) An applicant shall calculate the casualty expectancy for each populated area. E_{ck} is the casualty expectancy for a given populated area as shown in equation D6, where individual populated areas are designated with the subscript "k".

$$E_{ck} = P_i \cdot \left(\frac{A_c}{A_k}\right) \cdot N_k \qquad \text{(Equation D6)}$$

Where $\kappa \varepsilon \{1, 2, 3, \ldots n\}$
A_c=casualty area (from table D- 1)
A_k=populated area
N_k=population in A_k

TABLE D-l .-EFFECTIVE CASUALTY AREA (A,) VS. IMPACT RANGE

Impact range (nm)	Effective casualty area (miles?)
o-4	19x10-3

TABLE D-l .-EFFECTIVE CASUALTY AREA (A,) VS. IMPACT RANGE—Continued

Impact range (nm)	Effective casualty area (miles²)
5-49	9x10-3
50–1,749	1.1x10-3
1,750–4,999	3.6x10-6
5,000–more	3.6x10-6

(vii) An applicant shall estimate the total risk using the following summation of risk, including a multiplier of five, as shown in equation D7.

$$Ec(\text{Corridor}) = 5 \cdot \left(\sum_{k=l}^{n} E_{c_k}\right) \qquad \text{(Equation D7)}$$

(viii) Alternative Casualty Expectancy (E_C) Analysis. An applicant may employ specified variations to the analysis defined in subparagraphs (d)(l)(i)-(vii). Those variations are identified in subparagraphs (viii)(A) through (F) of this paragraph. Subparagraphs (A) through (D) permit an applicant to make conservative assumptions that would lead to an overestimation of E_c compared with the analysis defined in subparagraphs (d)(l)(i)-(vii). In subparagraphs (E) and (F). an applicant that would otherwise fail the analysis prescribed by subparagraphs (d)(1) (i)-(vii) may avoid (d)(1)(i)–(vii)'s overestimation of the probability of impact on each populated area. An applicant employing a variation shall identify the variation used, show an discuss

the specific assumptions made to modify the analysis defined in subparagraphs (d)(1)(i)-(vii). and justify how each assumption leads to overestimation of the corridor E_c compared with the analysis defined in subparagraphs (d)(l)(i)-(vii).

(A) Assume that P_x and P_y have a valve of 1 .O for all populated areas.

(B) Combine populated areas into one or more larger populated areas, and use a population density for the combined area or areas equal to the most dense populated area.

(C) For any given populated area, assume P_x has a value of one.

(D) For any given populated area, assume P_y has a value of one.

(E) For a given populated area, divide the populated area into small rectangles. determine P, for each individual rectangle. and sum the individual impact probabilities to determine P_i for the entire populated area.

(F) For a given populated area, use the ratio of the populated area to the area of the P, rectangle from the subparagraph (d)(1)(i)-(vii) analysis.

(2) If the estimated expected casualty does not exceed 30 x 10^{-6}, then no additional steps are necessary.

(3) If the estimated expected casualty exceeds 30 x 10^{-6}, then an applicant may modify its proposal and then repeat the impact risk analysis per this appendix D. If no set of impact dispersion areas exist which satisfy the FAA's risk threshold, the applicant's proposed launch site will fail the launch site location review.

Appendix E to Part 420.—Tables for Explosive Site Plan

TABLE E-I QUANTITY DISTANCE REQUIREMENTS FOR DIVISION 1.3 SOLID PROPELLANTS

Quantity (lbs.) (over)	PubliQhantity (lbs.) (notrover)	distance (ft.)	Intraline distance (ft.)
0	1,000	75	50
1,000	5,000	115	75
5,000	10,000	150	100
10,000	20,000	190	125
20,000	30,000	215	145
30,000	40,000	235	155
40,000	50,000	250	165
50,000	60,000	260	175
60,000	70,000	270	185
70,000	80,000	280	190
80,000	90,000	195	195
90,000	100,000	300	200
100,000	200,000	375	250
200,000	300,000	450	300
300,000	400,000	525	350
400,000	500,000	600	400
500,000	1,000,000	800	500

TABLE E–2: LIQUID PROPELLANT EXPLOSIVE EQUIVALENTS

Propelland combinations	Explosive equivalent
LO_2/LH_2	The larger of: $8W^{2/3}$ where W is the weight of LO2/LH2, or 14% of W.
$LO_2/LH_2+LO_2/RP-1$	Sum of (20% for $LO_2/RP-1$)+the larger of: $8W^{2/3}$ where W is the weight of LO2/LH2, or 14% of W.
$LO_2/RP-1$	20% of W up to 500,000 pounds plus 10% of W over 500,000 pounds, where W is the weight of LO2/RP–1.
$N_2O_4N_2H_4$ (or UDMH OR UDMH/N_2H_4 Mixture)	10% of W, where W is the weight of the propellant.

TABLE E-3: PROPELLANT HAZARD AND COMPATIBILITY GROUPINGS AND FACTORS TO BE USED WHEN CONVERTING GALLONS OF PROPELLANT INTO POUNDS

Propellant	Hazard group	Compatibility group	Pounds/gallon	At temperature °F
Hydrogen Perioxide	II	A	11.6	68
Hydrazine	III	C	8.4	68
Liquid Hydrogen	III	C	0.59	−423
Liquid Oxygen	II	A	9.5	−297
Nitrogen Tetroxide	I	A	12.1	68
RP-1	I	C	6.8	68
UDMH	III	C	6.6	68
UDHM/Hydrazine	III	C	7.5	68

TABLE E–4:—HAZARD GROUP I

Pounds of propellant		Public area and incompatible	Intragroup and compatible
Over	Not over	Distance in feet	Distance in feet
Column 1	Column 2	Column 3	Column 4
0	100	30	25
100	200	35	30
200	300	40	35
300	400	45	35

TABLE E-4.-HAZARD GROUP I-Continued

Pounds of propellant		Public area and incompatible	Intragroup and compatible
Over	Not over	Distance in feet	Distance in feet
Column 1	Column 2	Column 3	Column 4
400	500	50	40
500	600	50	40
600	700	55	40
700	800	55	45
800	900	60	45
900	1,000	60	45
1,000	2,000	65	50
2,000	3,000	70	55
3,000	4,000	75	55
4,000	5,000	80	60
5,000	6,000	80	60
6,000	7,000	85	65
7,000	8,000	85	65
8,000	9,000	90	70
9,000	10,000	90	70
10,000	15,000	95	75
15,000	20,000	100	80
20,000	25,000	105	80
25,000	30,000	110	85
30,000	35,000	110	85
35,000	40,000	115	85
40,000	45,000	120	90
45,000	50,000	120	90
50,000	60,000	125	95
60,000	70,000	130	95
70,000	80,000	130	100
80,000	90,000	135	100
90,000	100,000	135	105
100,000	125,000	140	110
125,000	150,000	145	110
150,000	175,000	150	115
175,000	200,000	155	115
200,000	250,000	160	120
250,000	300,000	165	125
300,000	350,000	170	130
350,000	400,000	175	130
400,000	450,000	180	135
450,000	500,000	180	135
500,000	600,000	185	140
600,000	700,000	190	145
700,000	800,000	195	150
800,000	900,000	200	150
900,000	1,000,000	205	155
1,000,000	2,000,000	235	175
2,000,000	3,000,000	255	190
3,000,000	4,000,000	265	200
4,000,000	5,000,000	275	210
5,000,000	6,000,000	285	215
6,000,000	7,000,000	295	220
7,000,000	8,000,000	300	225
8,000,000	9,000,000	305	230
9,000,000	10,000,000	310	235

TABLE E-5: HAZARD GROUP II

Pounds of propellant		Public area and incompatible	Intragroup and compatible
Over	Not over	Distance in feet	Distance in feet
Column 1	Column 2	Column 3	Column 4
0	100	60	30
100	200	75	35
200	300	85	40
300	400	90	45
400	500	100	50
500	600	100	50
600	700	105	55

TABLE E-5: HAZARD GROUP II-Continued

Pounds of propellant		Public area and incompatible	Intragroup and compatible
Over	Not over	Distance in feet	Distance in feet
Column 1	Column 2	Column 3	Column 4
700	800	110	55
800	900	115	60
900	1,000	120	60
1,000	2,000	130	65
2,000	3,000	145	70
3,000	4,000	150	75
4,000	5,000	160	80
5,000	6,000	165	80
6,000	7,000	170	85
7,000	8,000	175	85
8,000	9,000	175	90
9,000	10,000	180	90
10,000	15,000	195	95
15,000	20,000	205	100
20,000	25,000	215	105
25,000	30,000	220	110
30,000	35,000	225	110
35,000	40,000	230	115
40,000	45,000	235	120
45,000	50,000	240	120
50,000	60,000	250	125
60,000	70,000	255	130
70,000	80,000	260	130
80,000	90,000	265	135
90,000	100,000	270	135
100,000	125,000	285	140
125,000	150,000	295	145
150,000	175,000	305	150
175,000	200,000	310	155
200,000	250,000	320	160
250,000	300,000	330	165
300,000	350,000	340	170
350,000	400,000	350	175
400,000	450,000	355	180
450,000	500,000	360	180
500,000	600,000	375	185
600,000	700,000	385	190
700,000	800,000	395	195
800,000	900,000	405	200
900,000	1,000,000	410	205
1,000,000	2,000,000	470	235
2,000,000	3,000,000	505	255
3,000,000	4,000,000	535	265
4,000,000	5,000,000	555	275
5,000,000	6,000,000	570	285
6,000,000	7,000,000	585	295
7,000,000	8,000,000	600	300
8,000,000	9,000,000	610	305
9,000,000	10,000,000	620	310

TABLE E-6:-HAZARD GROUP III

Pounds of propellant		Public area and incompatible	Intragroup and compatible
Over	Not over	Distance in feet	Distance in feet
Column 1	Column 2	Column 3	Column 4
0	100	600	30
100	200	600	35
200	300	600	40
300	400	600	45
400	500	600	50
500	600	600	50
600	700	600	55
700	800	600	55
800	900	600	60
900	1,000	600	60

TABLE E–6:—HAZARD GROUP III-Continued

Pounds of propellant		Public area and incompatible	Intragroup and compatible
Over	Not over	Distance in feet	Distance in feet
Column 1	Column 2	Column 3	Column 4
1,000	2,000	600	65
2,000	3,000	600	70
3,000	4,000	600	75
4,000	5,000	600	80
5,000	6,000	600	80
6,000	7,000	600	85
7,000	8,000	600	85
8,000	9,000	600	90
9,000	10,000	600	90
10,000	15,000	1,200	95
15,000	20,000	1,200	100
20,000	25,000	1,200	105
25,000	30,000	1,200	110
30,000	35,000	1,200	110
35,000	40,000	1,200	115
40,000	45,000	1,200	120
45,000	50,000	1,200	120
50,000	60,000	1,200	125
60,000	70,000	1,200	130
70,000	80,000	1,200	130
80,000	90,000	1,200	135
90,000	100,000	1,200	135
100,000	125,000	1,800	140
125,000	150,000	1,800	145
150,000	175,000	1,800	150
175,000	200,000	1,800	155
200,000	250,000	1,800	160
250,000	300,000	1,800	165
300,000	350,000	1,800	170
350,000	400,000	1,800	175
400,000	450,000	1,800	180
450,000	500,000	1,800	180
500,000	600,000	1,800	185
600,000	700,000	1,800	190
700,000	800,000	1,800	195
800,000	900,000	1,800	200
900,000	1,000,000	1,800	205
1,000,000	2,000,000	1,800	235
2,000,000	3,000,000	1,800	255
3,000,000	4,000,000	1,800	265
4,000,000	5,000,000	1,800	275
5,000,000	6,000,000	1,800	285
6,000,000	7,000,000	1,800	295
7,000,000	8,000,000	1,800	300
8,000,000	9,000,000	1,800	300
9,000,000	10,000,000	1,800	310

TABLE E–7:—DISTANCES WHEN EXPLOSIVE EQUIVALENTS APPLY

TNT equivalent weight of propellants	Distance in feet	
	To public area	Intraline
Column 1	Column 2	Column 3
Not Over:		Unbarricaded
100	1,250	80
200	1,250	100
300	1,250	120
400	1,250	130
500	1,250	140
600	1,250	150
700	1,250	160
800	1,250	170
900	1,250	180
1,000	1,250	190
1,500	1,250	210
2,000	1,250	230

TABLE E–7.—DISTANCES WHEN EXPLOSIVE EQUIVALENTS APPLY—Continued

TNT equivalent weight of propellants	Distance in feet	
	To public area	Intraline
Column 1	Column 2	Column 3
3,000	1,250	260
4,000	1,250	280
5,000	1,250	300
6,000	1,250	320
7,000	1,250	340
8,000	1,250	360
9,000	1,250	380
10,000	1,250	400
15,000	1,250	450
20,000	1,250	490
25,000	1,250	530
30,000	1,250	560
35,000	1,310	590
40,000	1,370	620
45,000	1,425	640
50,000	1,475	660
55,000	1,520	680
60,000	1,565	700
65,000	1,610	720
70,000	1,650	740
75,000	1,685	770
80,000	1,725	780
85,000	1,760	790
90,000	1,795	800
95,000	1,825	820
100,000	1,855	830
125,000	2,115	900
150,000	2,350	950
175,000	2,565	1,000
200,000	2,770	1,050

[FR Doc. 99-15384 Filed 6–24–99; 8:45 am]
BILLING CODE 4910–13–M

[4910-13]

DEPARTMENT OF TRANSPORTATION

Federal Aviation Administration

14 CFR Parts 117,420

[Docket No. FAA-1999-5833 ; Notice No. 99-07]

RIN 2120-AG15

Licensing and Safety Requirements for Operation of a Launch Site

AGENCY: Federal Aviation Administration (FAA), DOT.

ACTION: Notice of proposed rulemaking (NPRM).

SUMMARY: The Department of Transportation's (DOT or the Department) Federal Aviation Administration (FAA) is proposing to amend its commercial space transportation licensing regulations to add licensing and safety requirements for the operation of a launch site. To date, commercial launches have occurred principally at federal launch ranges under safety procedures developed by federal launch range operators. To enable the development and use of launch sites that are not operated by a federal launch range, rules are needed to establish specific licensing and safety requirements for operating a launch site, whether that site is located on or off of a federal launch range. These proposed rules would provide licensed launch site operators with licensing and safety requirements to protect the public from the risks associated with activities at a launch site.

A separate rulemaking will address licensing and safety requirements for operation of a reentry site.

Pub 6/25/99
Part II 9/23/99

DATES: Comments on the proposed regulations must be submitted on or before [Insert date 90 days from publication in the FEDERAL REGISTER].

ADDRESSES: Comments on this proposed rulemaking should be mailed or delivered. in duplicate. to: U.S. Department of Transportation Dockets, Docket No. FAA- 1999 -5833 ,400 Seventh Street. SW. Room Plaza 401. Washington. DC 20590. Comments may also be sent electronically to the following Internet address: 9-NPRM-CMTS@faa.gov. Comments may be filed and/or examined in Room Plaza 401 between 10 a.m. and 5 p.m. weekdays except Federal holidays.

FOR FURTHER INFORMATION CONTACT: J. Randall Repcheck, Licensing and Safety Division (AST-200), Commercial Space Transportation, Federal Aviation Administration, 800 Independence Avenue, Washington, DC 20591; telephone (202) 267-8602; or Laura Montgomery, Office of the Chief Counsel (AGC-250), FAA, 800 Independence Avenue, Washington, DC 20591; telephone (202) 267-3 150.

SUPPLEMENTARY INFORMATION:

Comments Invited

Interested persons are invited to participate in this rulemaking by submitting such written data. views, or arguments as they may desire. Comments relating to the environmental, energy, federalism, or economic impact that might result from adopting the proposals in this notice are also invited. Substantive comments should be accompanied by cost estimates. Comments must identify the regulatory docket or notice number and be submitted in triplicate to the Rules Docket address specified above.

All comments received. as well as a report summarizing each substantive public contact with FAA personnel on this rulemaking, will be filed in the docket. The docket is available for public inspection before and after the comment closing date.

All comments received on or before the closing date will be considered by the FAA before taking action on this proposed rulemaking. Late-filed comments will be considered to the extent practicable. and consistent with statutory deadlines. The proposals contained in this notice may be changed in light of the comments received.

Commenters wishing the FAA to acknowledge receipt of their comments submitted in response to this notice must include a pre-addressed, stamped postcard with those comments on which the following statement is made: "Comments to Docket No. FAA- 1999 -5833 ." The postcard will be date stamped and mailed to the commenter.

Availability of NPRMs

An electronic copy of this document may be downloaded using a modem and suitable communications software from the FAA regulations section of the Fedworld electronic bulletin board service (telephone: 703-32 l-3339), the Government Printing Office's electronic bulletin board service (telephone: 202-5 12-1661), or the FAA's Aviation Rulemaking Advisory Committee Bulletin Board service (telephone: (800)322-2722 or (202)267-5948). Internet users may reach the FAA's web page at http://www.faa.gov/avr/arm/nprm/nprm.htm or the Government Printing Office's webpage at http://www.access.gpo.gov/nara for access to recently published rulemaking documents.

Any person may obtain a copy of this NPRM by submitting a request to the Federal Aviation Administration, Office of Rulemaking, ARM- 1, 800 Independence

Avenue, SW., Washington, DC 20591, or by calling (202) 267-9680. Communications must identify the notice number or docket number of this NPRM.

Persons interested in being placed on the mailing list for future NPRM's should request from the above office a copy of Advisory Circular No. 11-2A, Notice of Proposed Rulemaking Distribution System, that describes the application procedure.

Outline of Notice of Proposed Rulemaking:

I . Background

A. The FAA's Commercial Space Transportation Licensing Role

B. Growth and Current Status of Launch Site Industry

C. Current Practices

II. Discussion of Proposed Regulations

A. License and Safety Requirements for Operation of a Launch Site

B. Explosive Site Plan Review

C. Explosive Mishap Prevention Measures

D. Launch Site Location Review

E. License Conditions

F. Operational Responsibilities

III. Part Analysis

IV. Required Analyses

I. BACKGROUND

The Commercial Space Launch Act of 1984, as codified at 49 U.S.C. Subtitle IX--Commercial Space Transportation, ch. 70 1, Commercial Space Launch Activities, 49 U.S.C. §§ 70101-70121 (the Act), authorizes the Secretary of Transportation to license a

launch or the operation of a launch site carried out by a U.S. citizen or within the United States. 49 U.S.C. 70104. 70105. The Act directs the Secretary to exercise this responsibility in the interests of public health and safety, safety of property. and the national security and foreign policy interests of the United States. 49 U.S.C. 70105. On August 4, 1994, a National Space Transportation Policy reaffirmed the government's commitment to the commercial space transportation industry and the critical role of the Department of Transportation, (DOT) in encouraging and facilitating private sector launch activities. A National Space Policy released on September 19, 1996, notes and reaffirms that DOT is responsible as the lead agency for regulatory guidance pertaining to commercial space transportation activities.

A. The FAA's Commercial Space Transportation Licensing Role

On November 15, 1995, the Secretary of Transportation delegated commercial space licensing authority to the Federal Aviation Administration. The FAA licenses commercial launches and the operation of launch sites pursuant to the Act and implementing regulations at 14 CFR Ch. III. The commercial launch licensing regulations were issued in April 1988, when no commercial launches had yet taken place. Accordingly, DOT established a flexible licensing process intended to be responsive to an emerging industry while ensuring public safety. The Department noted that it would "continue to evaluate and, when necessary, reshape its program in response to growth, innovation, and diversity in this critically important industry." "Commercial Space Transportation; Licensing Regulations," 53 FR 11,004, 11,006 (Apr. 4, 1988).

Under the 1988 regulations, DOT implemented a case-by-case approach to evaluating launch and launch site operator license applications. At the time, it was

envisioned that most commercial launches would take place from federal launch ranges. which imposed extensive ground and flight safety requirements on launch operators. pending the development of commercial launch sites. The federal launch ranges provided commercial launch operators with facilities and launch support, including flight safety services.

Since 1988, DOT and now the FAA have taken steps designed to simplify further the licensing process for launch operators. The regulatory and licensing emphasis during the past decade has been on launch operators. The emergence of a commercial launch site sector has only become a reality during the past few years.

B. Growth and Current Status of Launch Site Industry

The commercial space transportation industry continues to grow and diversify. Between the first licensed commercial launch in August 1989, and June 1999, 113 licensed launches have taken place from five different federal launch ranges, one from a launch site operated by a licensed launch site operator and one has taken place from Spain. The vehicles have included traditional orbital expendable launch vehicles, such as the Atlas, Titan, and Delta, sub-orbital launch vehicles such as the Starfire, new expendable launch vehicles using traditional launch techniques, such as Athena and Conestoga, and unique vehicles, such as the air-borne Pegasus. In a notice of proposed rulemaking issued on March 19, 1997, 62 FR 132 16, the FM discussed how the commercial launch industry has evolved from one relying on traditional orbital and sub-orbital launch vehicles to one with a diverse mix of vehicles using new technology and new concepts. A number of international ventures involving U.S. companies have also formed, further adding to this diversity,

Developments in cost savings and innovation are not confined to the launch industry. The launch site industry. the focus of this NPRM. has also made progress. Commercial launch site operations are coming on line with the stated goal of providing flexible and cost-effective facilities both for existing launch vehicles and for new vehicles. When the commercial launch industry began, commercial launch companies based their launch operations chiefly at federal launch ranges operated by the Department of Defense (DOD) and the National Aeronautics and Space Administration (NASA). Federal launch ranges that have supported licensed launches include the Eastern Range. located at Cape Canaveral Air Station in Florida (CCAS), and the Western Range located at Vandenberg Air Force Base (VAFB), in California, both operated by the U.S. Air Force; Wallops Flight Facility in Virginia, operated by NASA; White Sands Missile Range (WSMR) in New Mexico, operated by the U.S. Army; and the Kauai Test Facility in Hawaii. operated by the U.S. Navy. Federal launch ranges provide the advantage of existing launch infrastructure and range safety services. Launch companies are able to obtain a number of services from a federal launch range, including radar, tracking and telemetry, flight termination and other launch services.

Today. most commercial launches still take place from federal launch ranges; however, this pattern may change as other launch sites become more prevalent. On September 19, 1996, the FAA granted the first license to operate a launch site to Spaceport Systems International to operate California Spaceport. That launch site is located within VAFB. Three other launch site operators have received licenses. Spaceport Florida Authority (SFA) received an FAA license to operate Launch Complex 46 at CCAS as a launch site. Virginia Commercial Space Flight Authority (VCSFA)

received a license to operate Virginia Spaceflight Center (VSC) within NASA's Wallops Flight Facility. Most recently. Alaska Aerospace Development Corporation (AADC) received a license to operate Kodiak Launch Complex (KLC) as a launch site on Kodiak Island. Alaska. The New Mexico Office of Space Commercialization (NMOSC) proposes to operate Southwest Regional Spaceport (SRS) adjacent to the White Sands Missile Range as a site for reusable launch vehicles. It is evident from this list that federal launch ranges still play a role in the licensed operation of a number of launch sites. California Spaceport, Spaceport Florida and VSC are located on federal launch range property.

Whether launching from a federal launch range, a launch site located on a federal launch range, or a non-federal launch site, a launch operator is responsible for ground and flight safety under its FAA license. At a federal launch range a launch operator must comply with the rules and procedures of the federal launch range. The safety rules, procedures and practice, in concert with the safety functions of the federal launch ranges, have been assessed by the FAA, and found to satisfy the majority of the FAA's safety concerns. In contrast, when launching from a non-federal launch site, a launch operator's responsibility for ground and flight safety takes on added importance. In the absence of federal launch range oversight, it will be incumbent upon each launch operator to demonstrate the adequacy of its ground and flight safety to the FAA.

C. Current Practices

Because of the time and investment involved in bringing a commercial launch facility into being, several entities that have been planning to establish these facilities asked the DOT for guidance concerning the information that might be requested as part

of an application for a license to operate a launch site. In response to these requests. DOT's then Office of Commercial Space Transportation (Office) published "Site Operators License. Guidelines for Applicants." on August 8. 1995, as guidance for potential launch site operators. The guidelines describe the information that DOT, and now the FAA. expects from an applicant for a license to operate a commercial launch site. This information includes launch site location information, a hazard analysis. and a launch site safety operations document that governs how the facility should be operated to ensure public safety and the safety of property. The Office intended that the guidelines would assist an applicant with the parts of the application that are critical to assuring the suitability of the launch site location, the applicant's organization, and the facility for providing safe operations.

The Office issued the guidelines as an interim measure for potential developers of launch sites pending this rulemaking, and the guidelines describe the information that the FAA requests of an applicant as part of its application for a license to operate a launch site. The pace of development of the launch site industry has resulted in the FAA describing the process and requirements for applications for launch site operator licenses under the guidelines. As noted above, the FAA issued its first license to operate a launch site to Spaceport Systems International for the operation of California Spaceport. The FAA issued this license under its general authority under 49 U.S.C. 70104 and 70105 and 14 CFR Ch. III to license the operation of a launch site. Because the operation of California Spaceport as a launch site occurs at a federal launch range, the U.S. Air Force is expected to play a significant role in California Spaceport's safety process. In fact, the FAA was able to review the Spaceport Systems International application expeditiously

because the applicant certified its intention to observe the safety requirements currently applied by the Western Range and contained in "Eastern and Western Range 127- 1. Range Safety Requirements (EWR 127-1)," (Mar. 1995) [1]. The FAA determined that applicant compliance with EWR 127-1, together with Air Force approval of other important elements of the operation of a launch site protected public health and safety and the safety of property. In general, the FAA deems the compliance by a licensed launch site operator with these requirements in combination with other safety practices imposed by a federal launch range as acceptable for purposes of protecting the public and property from hazards associated with launch site activities at a licensed launch site operator's facilities. In 1997, the FAA entered into a Memorandum of Agreement with Department of Defense and National Aeronautics and Space Administration regarding safety oversight of licensed launch site operators located on federal launch ranges.

Until these proposed rules become final, the guidelines provide the only published criteria for guiding a prospective license applicant and in identifying the criteria that the FAA uses in determining whether a proposed commercial launch site is acceptable.

Comparison of the Guidelines and the Proposed Regulations.

The existing guidelines will no longer be in effect once the proposed regulations are issued as final rules. A comparison of some of the similarities and differences may therefore prove of assistance. The FAA will issue a license to operate a launch site under either the guidelines or the proposed rules only if the operation of the launch site will not jeopardize the public health and safety, the safety of property, or national security or foreign policy interests of the United States. The guidelines are flexible and are intended

[1] EWR 127-I is updated on an ongoing basis. The latest version of these requirements may be found at http://www.pafb.af.mil/45SW/.

to identify the major elements of an application and lead the applicant through the application process with the FAA. The proposed rules would codify the requirements that must be met before a license will be issued.

The guidelines and the proposed rules share some common elements. namely. the need for the applicant to supply information to support the FAA's environmental determination under the National Environmental Policy Act (NEPA) and the FAA's policy review that addresses national security and foreign policy issues. These requirements are discussed in detail below, in the description of the proposed regulations. Under the proposed regulations, the information requirements for these reviews remain for the most part unchanged from the guidelines.

A review of the suitability of the proposed location of the launch site is an important component of both the guidelines and the proposed regulations. Although both approaches call for a site location review, the reviews differ in breadth and specificity. The guidelines request an applicant to provide information regarding geographic characteristics, flight paths and impact areas and the meteorological environment. To describe a launch site's geographic characteristics, an applicant is requested to provide information regarding the launch site location, size, and shape, its topographic and geological characteristics, its proximity to populated areas, and any local commercial and recreational activities that may be affected by launches such as air traffic, shipping, hunting, and offshore fishing. An applicant also provides planned possible flight paths and general impact areas designated for launch. If planned flight corridors overfly land, the guidelines request that an applicant provide flight safety analyses for generic sets of launch vehicles and describe, where applicable, any arrangements made to clear the land

of people prior to launch vehicle flight. With respect to the meteorological environment. the guidelines request an applicant to provide data regarding temperature, surface and upper wind direction and velocity. temperature inversions. and extreme conditions that may affect the safety of launch site operations. Under the guidelines. an application should include the frequency (average number of days for each month) of extremes in wind or temperature inversion that could have an impact on launch.

In contrast. the proposed rules would require an applicant to use specified methods to demonstrate the suitability of the launch site location for launching at least one type of launch vehicle, including orbital, guided sub-orbital, or unguided sub-orbital expendable launch vehicles, and reusable launch vehicles. Each proposed launch point on the launch site must be evaluated for each type of launch vehicle that the applicant wishes to have launched from the launch point. An applicant would be provided with a choice of methods to develop a flight corridor for a representative launch of an orbital or guided sub-orbital expendable launch vehicle, or to develop a set of impact dispersion areas for a representative launch of an unguided sub-orbital expendable launch vehicle. If a flight corridor or set of impact dispersion areas exists that does not encompass populated areas, no additional analysis would be required. Otherwise, an applicant would be required to conduct a risk analysis to demonstrate that the risk to the public from a representative launch would not exceed a casualty expectation (E,) of 30 x 10^{-6}. The FAA would review the applicant's analyses to ensure the applicant's process was correct, and would approve the launch site location if the E_c risk criteria were met.

Under either the guidelines or the proposed regulations, little or no launch site location review would be needed if the'applicant proposed to locate a launch site at a

federal launch range. The fundamental purpose of the FAA's proposed launch site location review -- to assure that a launch may potentially take place safely from the proposed launch site-- has been amply demonstrated at each of the ranges. Exceptions may occur if a prospective launch site operator plans to use a launch site at a federal launch range for launches markedly different from past federal launch range launches. or if an applicant proposes a new launch point from which no launch has taken place.

The guidelines and proposed regulations differ markedly in their approach to ground and flight safety. For ground safety under the guidelines, applicants perform a hazard analysis and develop a comprehensive ground safety plan and a safety organization. Explosive safety is part of the analysis and safety plan. In contrast, the proposed regulations require the submission of an explosive site plan, but impose fewer operational ground safety responsibilities on a launch site operator. For flight safety, under the guidelines and proposed rules, a launch site operator license contains minimal flight safety responsibilities. The FAA assigns almost all responsibility for flight safety and significant ground safety responsibility to a licensed launch operator. Extensive ground and flight safety requirements will accompany a launch license. This does not mean a launch site operator cannot offer flight safety services or equipment to its customers. However, the adequacy of such service and equipment typically will be assessed in the FAA's review of a launch license application.

II. Discussion of Proposed Regulations

The proposed regulations specify who must obtain a license to operate a launch site, application requirements and licensee responsibilities. Because a launch licensee's license covers ground operations as well as the flight of a launch vehicle, a launch

operator is not required to obtain a license to operate a launch site. The FAA is aware that a launch operator may select a launch site for its own launches. In that event. a launch operator requires a license to launch. Only if a prospective launch site operator proposes to offer its launch site to others. need that person obtain a license to operate a launch site.

By means of operational, location. and site layout constraints, the FAA intends its regulations to ensure that the public is not harmed by launches that take place from a launch site whose operation the FM has licensed. Additionally, in the course of a license review, the FAA will ensure that environmental and international obligations are addressed, and that national security interests are reviewed by the appropriate agencies. To further these objectives, the FAA proposes to create in 14 CFR Chapter III a new part 420 to contain the requirements for obtaining and possessing a license to operate a launch site. The FAA's proposed part 420 would require an applicant to obtain certain FAA approvals in order to receive a license to operate a launch site. These required approvals consist of policy, explosive site plan, and location approvals. Environmental review may precede or be concurrent with the licensing process.

The grant of a license to operate a launch site will not guarantee that a launch license will be granted for any particular launch proposed for the site. All launches will be subject to separate FAA review and licensing.

A. **Licensing and safety requirements for operation of a launch site**

The FAA's proposed approach to licensing the operation of a launch site would focus on four areas of concern critical to ensuring that operation of a launch site would not jeopardize public health and safety;' the safety of property or foreign policy and other

U.S. interests. These reviews would encompass the environment. policy. siting of explosives. and site location. Under the proposed regulations. an applicant would be required to provide the FAA with information sufficient to conduct environmental and policy reviews and determinations. An applicant would also be required to submit an explosive site plan that shows the location of all explosive hazard facilities and distances between them, and the distances to public areas.

In the case of launch site location approval. the proposed regulations would provide an applicant options for proving to the FAA that a launch could be conducted from the site without jeopardizing public health and safety. The requirement for a launch site location approval would not normally apply to an applicant who proposes to operate an existing launch point at a federal launch range, unless the applicant plans to use a launch point different than used previously by the federal launch range, or to use an existing launch point for a different type or larger launch vehicle than used in the past. The fact that launches have taken place safely from any particular launch point at a federal launch range may provide the same demonstration that would be accomplished by the FAA's proposed location review: namely, a showing that launch may occur safely from the site.

The FAA is proposing to impose specific ground safety responsibilities on a licensed launch site operator, and will require that an applicant demonstrate how those requirements will be met. A launch site operator licensee's responsibilities would include: preventing unauthorized public access to the site; properly preparing the public and customers to visit the site; informing customers of limitations on use of the site; scheduling and coordinating hazardous'activities conducted by customers; and arranging

for the clearing of air and sea routes and notifying adjacent property owners and local jurisdictions of the pending flight of a launch vehicle. Part 420 would also contain launch site operator responsibilities with regard to recordkeeping, license transfer. compliance monitoring. accident investigation and explosives. Other federal government agencies have jurisdiction over a number of ground safety issues, and the FAA does not intend to duplicate their efforts.[2,3] The FAA will revisit ground safety issues in its development of rules for launches from non-federal launch sites.

Environmental.

Licensing the operation of a launch site is a major federal action for purposes of the National Environmental Policy Act, 42 U.S.C. 432 1 et seq. As a result, the FAA is required to assess the environmental impacts of constructing and operating a proposed launch site to determine whether these activities will significantly affect the quality of the environment. Although the FAA is responsible under NEPA regulations for preparing an environmental assessment or environmental impact statement, the proposed rules continue to require a license applicant to provide the FAA with sufficient information to

[2] The U.S. Occupational Safety and Health Administration (OSHA) and the U.S. Environmental Protection Agency (EPA) play a role in regulating ground activities at a launch site. OSHA regulations cover worker safety issues, and may, as a by-product, help protect public safety as well. One provision of particular note is 29 CFR I9 IO.119, process safety management of highly hazardous chemicals (PSM). The requirements of the PSM standard are intended to eliminate or mitigate the consequences of releases of highly hazardous chemicals that may be toxic, reactive, flammable, or explosive. Management controls are emphasized to address the risks associated with handling or working near hazardous chemicals. These requirements may apply to some launch site and launch operators. EPA regulations are designed to protect the public health and safety from releases of chemicals. One regulation of note is 40 CFR part 68, Accidental release prevention provisions. It applies to an owner or operator of a stationary source that has more than a threshold quantity of a regulated substance in a process, and requires the owner or operator to develop and implement a risk management program to prevent accidents and limit the severity of any accidents that occur. The EPA rule further requires sources to conduct an offsite consequence analysis to define the potential impacts of worst-case releases and other release scenarios. For any process whose worst-case release would reach the public, the source must develop and implement a prevention program and an emergency response program. Both the EPA and OSHA prevention rules require regulated entities to conduct formal analyses of the risks involved in the use and storage of covered substances and consider all possible ways in which existing systems could fail and result in accidental releases.

3. from pg 21

conduct an analysis in accordance with the requirements of the Council on Environmental Quality (CEQ) Regulations Implementing the Procedural Provisions of NEPA. JO CFR parts 1500-l 508, and the FAA's Procedures for Considering Environmental Impacts, FAA Order 1050.1 D. An applicant will typically engage a contractor with specialized experience in the NEPA process to conduct the study underpinning the FAA's environmental analysis. This rulemaking marks no change in the environmental requirements attendant to obtaining a license to operate a launch site.

The FAA encourages an applicant to begin the environmental review, including the gathering of pertinent information to perform the assessment, early in the planning process, but after the applicant has defined its proposed action and considered feasible alternatives. The FAA will determine whether a finding of no significant impact (FONSI) may be issued after an environmental assessment, or whether an environmental impact statement followed by a record of decision is necessary. An applicant may be subject to restrictions on activities at a proposed launch site. An applicant may acquire property for future use as a launch site; however, absent a FONSI, the FAA must prepare an environmental review that includes consideration of reasonable alternatives to the site. According to the CEQ regulations as interpreted by the courts, an applicant may not use the purchase of a site or construction at the site to limit the array of reasonable alternatives. As a result, an applicant must complete the environmental process before construction or improvement of the site. The FAA will not issue a license if an environmental review in accordance with all applicable regulations and guidelines is not concluded.

Policy.

Under current practice. the FAA conducts a policy review of an application for a license to operate a launch site to determine whether operation of the proposed launch site would jeopardize national security. foreign policy interests, or international obligations of the United States. The FAA conducts the policy review in coordination with other federal agencies that have responsibility for national and international interests. The Department of Defense is consulted to determine whether a license application presents any issues affecting national security. The Department of State reviews an application for issues affecting foreign policy or international obligations. Other agencies, such as NASA, are consulted as appropriate. By this rulemaking, the regulations would require an applicant to supply information relevant to the FAA's policy approval, including, for example, identification of foreign ownership of the applicant. The FAA will obtain other information required for a policy review from information submitted by an applicant in other parts of the application. During a policy review, the FAA would consult with an applicant regarding any questions or issues before making a final determination. An applicant would have the opportunity to address any questions before completion of the review.

B. Explosive Site Plan Review

Proposed subpart B would establish criteria and procedures for the siting of facilities at a launch site where solid and liquid propellants are to be located to prepare launch vehicles and payloads for flight. Subpart B also would establish application procedures for an applicant to demonstrate compliance with the siting criteria. The requirements in subpart B are commonly referred to as quantity-distance (Q-D) requirements because they provide minimum separation distances between explosive

hazard facilities. surrounding facilities and locations where the public may be present on the basis of the type and quantity of explosive material to be located within the area. Minimum prescribed separation distances are necessary to protect the public from explosive hazards on a launch site so that the effects of an explosion does not reach the public.

An applicant would provide the FAA an explosive site plan that demonstrates compliance with the proposed Q-D requirements. The FAA must approve this plan. so applicants are cautioned not to begin construction of facilities requiring an explosives site plan until obtaining FAA approval. Note also that the proposed Q-D requirements do not address any toxic hazards. Toxic hazards may be mitigated through procedural means, and the FAA will address toxic hazards in a separate rulemaking. If a toxic hazard is a controlling factor in siting, it should be considered along with the explosives hazards when the site plan is prepared.

The FAA proposes to adopt the explosive safety practice in use at federal launch ranges today, namely, the application of quantity-distance criteria. Prescribed distances provide for separation of an explosive source from people and property that may otherwise be exposed to explosive events. These criteria have long been used to mitigate explosive hazards to an acceptable level. Q-D criteria address only the consequences. The underlying assumption of quantity-distance criteria is that an accidental explosion will occur for any explosive material operation.

The quantity-distance criteria in the proposed regulations are a critical mitigation measure required in a launch site operator application to provide the public protection from ground operations at a launch site: The proposed rules have other mitigation

measures. including launch site operator responsibilities that address accident prevention measures, and procedural requirements to protect visitors and other launch site customers on the launch site. Any other procedural requirements necessary to protect the public from explosive hazards will be the responsibility of a launch operator under a launch license. The scope of a launch license encompasses ground activities, including the explosive operations involved with the handling and assembly of launch vehicles at a launch site.

The requirement to submit an explosive site plan to the FAA would not apply to an applicant applying for a license to operate a launch site at a federal launch range. Federal launch ranges have separate rules which are either identical or similar to the rules proposed, or permit mitigation measures which otherwise ensure safety.

What follows is a discussion of launch site explosive hazards, the reason the FAA is proposing explosive siting criteria, current Q-D standards, the FAA's proposed use of NASA and DOD Q-D standards, other approaches to explosive safety, application of ATF, DOD or NASA standards, future changes in liquid propellant requirements, and solid and liquid bi-propellants at launch pads.

Explosive hazards on a launch site.

The hazards associated with launch vehicle pre-flight operations involving large quantities of propellants may typically be broken down into phases, including storage, handling, assembly, checkout, ordnance installation, propellant loading, and final launch preparations. Each of these are covered below, for liquid and solid propellants.

During storage, liquid propellant hazards include leaking or ruptured propellant tanks caused by loss of pressure or mechanical failure. If fuels and oxidizers are stored

separately. any potentially harmful event would be limited to fire or tank pressure rupture. Solid propellant hazards include accidental ordnance initiation caused by stray electrical energy. or dropping a motor with sufficient impact force to initiate the propellant. Long term storage of solid rocket motors, although not within the scope of this rulemaking,[3] presents its own unique hazards. As solid rocket motors age. chemical changes in the binder within the motor cause ammonium perchlorate to form on the outside of the motor. This is a hazardous condition. The shelf life of solid rocket motors can be extended by a carefully controlled environment in the storage facility.

The handling phase may include the transfer of liquid propellants from one holding tank to another. Explosive reactions may occur if fuels and oxidizers mix due to under or overpressurization, or if improper connections cause propellant tanks, transfer lines, or fittings to leak or rupture. If fuels and oxidizers are handled separately no explosive reactions should occur. Hazardous handling operations of solid rocket motors includes transporting and lifting with cranes at the launch pad or other facility. Any impact during these activities could cause propellant ignition.

During assembly, liquid propellant operations include the assembly and encapsulation of spacecraft and upper stages. Assembly and encapsulation may involve loading hypergolic propellants such as nitrogen tetroxide (N_2O_4) and hydrazine. Tank punctures, impacts caused by lifting, and over- or under-pressurization could cause fuels and oxidizers to come in contact with one another, causing fire and fragmentation hazards. This phase includes the final assembly of solid rocket motors at a launch pad or

[3] ATF regulations cover the long-term storage of explosives.

other facility,. Any motor impact on the ground during these activities could cause propellant ignition.

Checkout at a launch pad may involve a number of hazards due to the presence of solid propellant and hypergolic propellant stages. Any accident causing interaction between hypergolic and solid propellants can result in fires. pressure ruptures. and propulsive flight.

During ordnance installation, inadvertent initiation of electro-explosive devices (EEDs) is possible. This does not pose a threat to the public (although it does to the vehicle and personnel) because EEDs have a small quantity of explosive and are not, by design. capable of detonating propellants.

The main hazard during propellant loading is over or under-pressurization of liquid propellant tanks, which may cause major spills of fuels and oxidizers. These events could lead to significant explosive yield, which is the energy released by an explosion.

Final launch preparations, which begin just prior to flight, involve a fully fueled launch vehicle. Systems are switched to internal power, and liquid propellant systems are brought to flight pressure. A mishap here could lead to significant explosive yield. The explosive yield of a launch vehicle exploding on a launch pad is based on shock impact for solid propellants, and non-dynamic mixing of liquid propellants by, for example, the failure of interior bulkheads in the launch vehicle.

Reason for proposing explosive siting criteria.

After careful consideration, the FAA decided it had to propose explosive siting criteria to protect the public from explosive hazards associated with the operation of a

launch site. Although the FAA places much of the responsibility for safety of hazardous ground operations on the launch operator. the FAA believes that the siting requirements would be better addressed by a launch site operator. This is because the siting requirements will more efficiently be satisfied prior to construction of launch site facilities rather than afterwards. The FAA does not intend to duplicate or supercede existing regulatory frameworks. Although both the Bureau of Alcohol. Tobacco and Firearms (ATF) and the Occupational Safety and Health Administration (OSHA) have regulations on explosives, neither provides all the quantity-distance criteria applicable to a launch site necessary to protect the public.[4]

ATF has jurisdiction over the storage of commercial explosives in order to provide for public safety. The storage requirements in 27 CFR Part 55, Commerce in Explosives, include construction, separation distances, and some storage compatibility provisions. They also cover items such as licensing, records, and other administrative procedures.

Two gaps in coverage require FAA involvement, namely, the handling of explosives and the treatment of liquid bi-propellants. In the first instance, ATF regulations are limited to storage, not the use or handling of an explosive. Many of the activities that occur on a launch site will not constitute storage. These activities include moving or handling solid rocket motors and other ordnance for the purpose of preparing a launch vehicle for flight, and the build-up and checkout of a launch vehicle on a launch pad. The FAA's proposed regulations are required to ensure the safety of the public from

[4] Another agency, the Research and Special Programs Administration (RSPA), DOT, has regulations for the commercial shipment of explosives (and other hazardous material) by rail, motor vehicle, cargo aircraft and ship within the United States. These regulations are found in Title 49 of the Code of Federal Regulations.

these activities. Additionally. ATF regulations only address solid explosives and liquid mono-propellants. Large quantities of liquid bi-propellants are often used on existing launch sites, and many of these bi-propellants pose an explosive hazard to the public. The FAA is proposing rules to ensure the safe use and storage of liquid bi-propellants.

OSHA explosives requirements are contained in 29 CFR § 19 10.109, Explosives and Blasting Agents. These requirements apply to the manufacture, keeping, having, storage. sale, transportation, and use of explosives, blasting agents, and pyrotechnics. OSHA regulations do not address public safety. For example, 29 CFR § 19 10.109 only includes Q-D requirements for the separation of magazines from each other. OSHA requirements do not address public areas such as inhabited buildings, passenger railways, and public highways. The FAA believes Q-D requirements that adequately separate the public from the effects of an explosion are necessary to protect the public.

The FAA recognizes that procedural measures may also be employed to achieve explosive safety. For example, if two customers of a launch site operator intend to conduct explosive handling operations in adjacent facilities that are not sited for public area distances, a launch site operator may schedule their operations at different times and keep one facility vacant to maintain safety. A licensee who proposed such measures as a substitute for the siting criteria proposed in this rulemaking would have to anticipate license terms and conditions that achieved an equivalent level of safety.

Current Q-D standards.

Current standards effectively mitigate explosive hazards on federal launch ranges. The FAA, therefore, studied these standards in order to adopt the most relevant parts in

its proposed Q-D standards. DOD. NASA. and. for storage. ATF, have explosive standards designed to protect the public.

The DOD standard, “DOD STD 6055.9. DOD Ammunition and Explosives Safety Standards,” (Aug. 1997), is the standard used for explosive siting on DOD launch sites and for commercial launch sites located on DOD property. DOD 6055.9-STD defines general explosive safety criteria for use throughout the DOD, and establishes protection criteria for personnel and assets such as facilities, equipment. and munitions. The DOD standard provides quantity-distance criteria to protect against overpressure and fragments, and permissible exposure levels to protect against thermal hazards.

The Q-D criteria in DOD STD 6055.9 constitute a refinement of the American Table of Distances (ATD), originally published in 1910 by the Institute of Makers of Explosives. Authors of the ATD criteria acknowledged very early that listed separation distances do not provide absolute safety. The magnitude of the hazard is simply mitigated to a level the ATD authors deemed to be acceptable. Because of this. the FAA encourages license applicants to use greater distances where practicable.

DOD STD 6055.9 also provides information relating to the construction and siting of facilities that are potential explosive sites or that may be exposed to the damaging effects of explosions. The effects of potential explosions may be altered significantly by construction features that limit the amount of explosives involved, attenuate resultant blast overpressure or thermal radiation, and reduce the quantity and range of hazardous fragments and debris. DOD also includes additional criteria for electrical safety and lightning.

ATF also adopted the ATD in its approach to facility siting. ATF regulations provide procedural and substantive requirements regarding. in relevant part. the issuance of user permits and the storage of explosive materials. ATF specifies tables of distances for high explosives. low explosives, and blasting agents. The tables governing high explosives and low explosives are very pertinent to launch site operations.

As noted, the scope of operations within a launch site goes beyond the on-site receipt, transfer and storage of explosives within ATF jurisdiction. A launch site may have a number of launch vehicle and payload customers on site who possess liquid and solid propellants that are being used for incorporation into a launch vehicle or payload.

NASA's safety standards and policy for operations involving explosives are contained in "Safety Standard for Explosives, Propellants, and Pyrotechnics." NSS 1740.12 (Aug. 12,1993) (NASA Standard). This document contains a uniform set of standards for all NASA facilities engaged in the development, manufacture, handling, storage, transportation, processing, or testing of explosives. Like the DOD standard. the NASA standard contains guidelines and standards for explosive operations in order to safeguard not only the public, but personnel and property. It covers not only Q-D criteria, but personnel training, operating procedures, and other policies such as the use of all available advances in protective construction to provide the safest work environment to prevent or minimize the exposure of personnel and facilities to explosives hazards when performing NASA program activities.

FAA's proposed use of NASA and DOD Q-D standards for licensed operation of a launch site.

Because the NASA and DOD standards are similar. and because both the NASA and DOD standards comprehensively cover explosive hazards at a launch site. the FAA has used both as a guide in proposing the rules in subpart B. However. the FAA proposes to employ the tables and many of the definitions of the NASA standard specifically.

The relevant differences for solid explosives between NASA, DOD. and ATF are not significant. The NASA and ATF table for division 1.3 explosives (discussed below) are identical except that ATF requirements stop at 300,000 pounds. The NASA division 1.3 table is also the same as the DOD standard except that the DOD standard has more increments.

The relevant differences for liquid propellants between the NASA and DOD standards are also minor.[5] The hazard groups that liquid propellants fall into, discussed below. are identical in the two standards. The values in the table used for explosive equivalents are also identical for quantities greater than 35,000 pounds. A discrepancy exists under 35,000 pounds because the DOD requirement is based on a table used for division 1.1 solid explosives.[6] The distance specified below 35,000 pounds in the DOD table is based on the ranges of hazardous fragments and firebrands from an explosion. This is appropriate for solid explosives but is not necessary for liquid propellant explosive equivalents. The NASA standard, on the other hand, has separate tables for division 1.1 solid explosives and liquid propellant explosive equivalents. The NASA

[5] ATF does not regulate liquid propellants, other than mono-propellants.
[6] Solid explosives, like liquid explosives, may be measured in terms of explosive equivalency. The explosive equivalency of a certain weight of solid explosive is the weight of trinitrotoluene that would provide an equivalent blast effect.

table for division I. l solid explosives takes fragments and tirebrands into account. as appropriate. NASA's table for liquid propellants does not take fragmentation into account.

Other approaches to explosive safety.

The FAA has taken a number of measures in order to simplify the proposed Q-D standards. The proposed requirements do not account for the use of hardening or barricades, or for any other solid propellant other than division 1.3. The proposed rules also reflect that only two liquid propellant compatibility groups are necessary. These are discussed below.

The proposed requirements do not account for hardening. Both NASA and DOD have standards for using protective construction to harden an explosive hazard facility to suppress explosion effects, and to harden an area potentially exposed to explosive hazards. In the NASA and DOD standards, the use of hardening may reduce the required distance between an explosive hazard facility and a public area. The proposed rules do not explicitly address hardening. The distances required between explosive hazard facilities and public areas assume that neither the explosive hazard facilities nor the public areas are hardened. Because of the complexity of hardening standards, the FAA believes hardening is better left to case-by-case approval. If an applicant plans to use hardening, the applicant should plan on demonstrating an equivalent level of safety to justify a reduction in applicable Q-D requirements.

Similarly, the proposed requirements do not account for the use of barricades and other protective measures to mitigate the effect of an explosion on exposed areas. An applicant proposing to use such measures in order to deviate from the proposed siting

rules may apply for a waiver to the FAA. accompanied with a demonstration that the applicant achieves an equivalent level of safety.

The proposed requirements govern only one type of solid explosive. division 1.3. To classify solid propellants. the FAA is proposing to adopt the United Nations Organization (UNO) classification system for transport of dangerous goods. This classification system is reflected in DOD and NASA standards. and standards of the Department of Transportation's Research and Special Programs Administration. Propellants will be assigned the appropriate DOT class in accordance with 49 CFR § 173. The hazard classification system used by all three agencies consists of nine classes for dangerous goods with ammunition and explosives included in UNO "Class 1, Explosives." Class 1 explosives are further subdivided into "divisions" based on the character and predominance of the associated hazards and on the potential for causing casualties or property damage. As defined in 49 CFR § 173.50:

- Division 1.1 - consists of explosives that have a mass explosion hazard. A mass explosion is one which affects almost the entire load instantaneously.
- Division 1.2 - consists of explosives that have a projection hazard but not a mass explosion hazard.
- Division 1.3 - consists of explosives that have a fire hazard and either a minor blast hazard or a minor projection hazard or both, but not a mass explosion hazard.
- Division 1.4 - consists of explosives that present a minor explosion hazard.
- Division 1.5 - consists of very insensitive explosives.

- Division 1.6 - consists of extremely insensitive articles which do not have a mass explosion hazard.

The FAA proposes criteria only for division 1.3. The only solid explosives for commercial launches that will likely affect separation distances on a launch site are division 1.3 propellants. Although launch vehicles frequently have components incorporating division 1.1 explosives, such as those used to initiate flight termination systems, the quantity is small. Division 1.1 explosives will not likely be present in sufficient quantities to affect the application of Q-D criteria. The only division 1.1 solid rocket motors existing today are from old military missiles which are not likely to be used at a commercial launch site. When liquid fuels and oxidizers are located together, as they would be during a fueling test, the combination has an explosive potential equal to a percentage of division 1.1 explosives. The proposed rules take such activities into account. but address liquid propellants separately from solid propellants.

The proposed regulations would not assign compatibility groups for solid propellants. The NASA and DOD standards assign solid explosives to compatibility groups. Explosives are assigned to the same group when they can be stored together without significantly increasing either the probability of an accident or, for a given quantity, the magnitude of the effects of such an accident. Because division 1.3 solid propellants are all compatible, the proposed regulations do not incorporate compatibility groups for solid propellants.

Like the DOD and NASA standards, the proposed rules classify each liquid propellant into one hazard group and one compatibility group. Classifying each liquid propellant into a hazard group is necessary because the hazards associated with different

liquid propellants vary widely, and the quantity-distance relationship varies accordingly.. Hazard group l individually represents a tire hazard. hazard group 2 individually represents a more serious fire hazard. and hazard group 3 individually represents a fragmentation hazard because propellants in this category can cause rupture of a storage container.

The proposed rules classify current launch vehicle liquid propellants, namely, liquid hydrogen (LH2), RP-1. hydrazine (N2H4) and its variants (e.g. UDMH and Aerozine-50), hydrogen peroxide, liquid oxygen (LO2), and nitrogen tetroxide (N2O4). RP- 1 and N204 fall into hazard group 1, hydrogen peroxide and LO2 fall into hazard group 2. and LH2 and N2H4 fall into hazard group 3. Other propellants will be classified on a case-by-case basis.

Like the NASA and DOD standards, the proposed rules also assign each liquid propellant into a compatibility group. However, unlike those standards which cover many different types of propellants, only two compatibility groups are represented in the proposed rules, group A and group C. Group A represents oxidizers, such as L02, N204, and hydrogen peroxide, and group C represents fuels. Whenever propellants of different compatibility groups are not separated by the minimum distance requirements, that is, when fuels and oxidizers are close enough to each other to potentially mix and explode, the explosive equivalency of the explosive mixture must be calculated.

Application of ATF, DOD, or NASA standards.

The storage of solid propellant and liquid mono-propellant on a launch site is covered by ATF regulations, and therefore not addressed in the FAA's proposed requirements. ATF has a permit process for the storage of solid propellants and liquid

mono-propellants. The FAA's proposed rules. therefore. do not cover the separation distance between magazines. or between magazines and public areas. However, an applicant must show any magazines in its explosive site plan and their location in relation to other explosive hazard facilities. Applicants should note that on federal launch ranges DOD or NASA standards apply. These launch sites may have Q-D requirements that are different than the FAA's proposed rules.

Future change in liquid propellant requirements.

The DOD Explosive Safety Board (DDESB) has initiated a DOD Explosive Safety Standard for Energetic Liquids Program, and has established an interagency advisory board called the Liquid Propellants Working Group (LPWG). The FAA is a member of this group. A number of possible inconsistencies and irregularities have been identified in the current approach to siting liquid propellants. These include Q-D criteria for most liquid propellants, possible inconsistencies in hazard group and compatibility group definitions, and possible inaccurate characterization of blast over-pressure hazards of liquid propellant explosions. The purpose of the LPWG is to address issues of explosive equivalence, compatibility mixing, and quantity-distance criteria. and to develop recommended revisions to DOD STD 6055.9 addressing liquid propellants and other liquid energetic materials. The LPWG is currently consolidating all available test and accident data, and non-DOD regulatory information to provide a basis for the revisions.

Because the DDESB is possibly the best equipped group in the country to address these issues, the FAA will carefully consider its recommendations. The basic approach outlined in the proposed rule should not change. However, the DDESB is likely to

specify new hazard and compatibility groups, distance values, and equivalency values, and the public may anticipate their eventual consideration and possible adoption by the FAA.

Solid and liquid bi-propellants at launch pads.

The FAA is proposing a special requirement at launch pads for launch vehicles that use liquid bi-propellant and solid propellant components. The required separation distance shall be the greater of the distance determined by the explosive equivalent of the liquid propellant alone or the solid propellant alone. An applicant does not have to add the separation distances of both. This notice assumes that generally, no credible scenario exists that could produce a simultaneous explosion reaction of both liquid propellant tanks and solid propellant motors. Although not reflected in the published DOD and NASA standards, the proposed requirement constitutes current practice at federal launch ranges. The FAA is interested in the public's view on this approach.

C. Explosive Mishap Prevention Measures.

Application of the proposed quantity-distance rules alone will not prevent mishaps from occurring on a launch site. The proposed Q-D rules merely reduce the risk to the public to an acceptable level if a mishap occurs, and if the public is kept away from the mishap by a distance that is at least as great as the public area distance. Safe facility design and prudent procedural measures are critical to preventing a mishap from occurring in the first place. Because visitors to a launch site cannot be protected by prudent site planning alone, the FAA has proposed launch site operator responsibilities to prevent mishaps involving propellants.

The FAA considered measures taken at federal launch ranges to prevent inadvertent initiation of propellants. For this notice the FAA focussed on those measures that are appropriate to be taken by a launch site operator. For the most part, the FAA considers it prudent to place the responsibility on a launch site operator for those measures that must be built into facilities. Requirements of a more operational nature will be covered in another rulemaking.

The FAA focussed on.construction measures intended to prevent inadvertent initiation of propellant from electricity. These are particularly important for electro-explosive devices. Electric hazards include electrostatic discharge such as lightning, static electricity, electric supply systems, and electromagnetic radiation. As discussed below, the FAA is proposing launch site operator requirements for two of these electric hazards: lightning and electric supply systems. Other measures were considered but rejected because the FAA's planned rulemaking on launches from non-federal launch sites will cover other procedural measures to guard against inadvertent initiation of propellants from electricity. Moreover, the FAA believes launch and launch site operators will implement prudent design and construction measures to comply with local. state, and other federal law, such as OSHA requirements. The FAA is interested in public views on this approach and any need to address other facility requirements.

Lightning Protection.

Rocket motors may be energized to dangerous levels by lightning. The primary method of protecting against damage from lightning is to provide a means to direct a lightning discharge directly to the earth without causing harm to people or property. A lightning protection system consists of a system of air terminals such as lightning rods, a

system of ground terminals. and a conductor system connecting the air terminals to the ground terminals. These systems are typically installed during construction.

The FAA proposes to impose certain requirements on launch site operators involving lightning protection. The requirements are based on current industry practice. namely. DOD STD 6055.9. chapter 7. and the NASA standard's chapter 5. Each of those standards define. in detail, minimum explosives safety criteria for the design, maintenance, testing and inspection of lightning protection systems. The FAA's proposed rules are not as detailed as those standards so that an applicant may have more flexibility in meeting performance standards. The FAA expects applicants to achieve the level of safety represented by the DOD and NASA standard.

The FAA's proposed rules were derived from the DOD and NASA standards, which are similar to each other. Like NASA and DOD, the proposed rules require lightning protection for all explosives hazard facilities. The design of lightning protection systems includes air terminals, low impedance paths to the ground, referred to as down conductors, and earth electrode systems. An air terminal is a component of a lightning protection system that is able to safely intercept lightning strikes. Air terminals may include overhead wires or grids, vertical spikes, or a building's grounded structural elements. Air terminals must be capable of safely conducting a lighting strike. Down conductors, such as wires or structural elements having high current capacity, provide low impedance paths from the air terminals described above to an earth ground system. Earth electrode systems dissipate the current from a lightning strike to ground.

Bonding and surge protection are other important considerations for lightning protection systems. Metallic bodies, such as fences and railroad tracks near an explosive

hazard facility. should be bonded to ensure that voltage potentials due to lightning are equal everywhere in the explosive hazard facility. Lightning protection systems should also include surge protection for all incoming conductors. such as metallic power. communication. and instrumentation lines coming into an explosive hazard facility, so as to reduce transient voltages due to lightning to a harmless level.

The FAA proposes to adopt a provision of DOD STD 6055.9 that exempts the need for a lightning protection system when a local lightning warning system is used to permit operations to be terminated before the incidence of an electrical storm, if all personnel can and will be provided with protection equivalent to a public traffic route distance, which is equivalent to the FAA's proposed public area distance. The FAA is interested in views on this exception, and whether it is sensible in light of the small chance that lightning may cause inadvertent solid rocket motor flight. The FAA is also interested in views on whether other exceptions should be added.

The National Fire Protection Association (NFPA), Batterymarch Park, Quincy, Massachusetts. has published a Lightning Protection Code, NFPA 780 (1995). The FM is interested in the public's views on the use and applicability of this code.

Static Electricity.

Rocket motors may be energized to dangerous levels by extraneous electricity such as static electricity, fields around electric supply lines, and radio frequency emissions from radio, radar, and television transmitters.

Static electricity is generally created by a transfer of electrons from one substance to another caused by friction or rubbing. The generation of static electricity is not in itself a hazard. The hazard arises when static electricity is allowed to accumulate,

subsequently discharging as a spark across an air gap in the presence of highly flammable materials or energetic materials such as propellants. The NASA standard states that:

> In order for static to be a source of ignition. five conditions must be fulfilled: (1) a mechanism for generating static electricity must be present. (2) a means of accumulating or storing the charge so generated must exist. (3) a suitable gap across which the spark can develop must be present, (4) a voltage difference sufficient to cause electrical breakdown or dielectric breakdown must develop across the gap, and (5) a sufficient amount of energy must be present in the spark to exceed the minimum ignition energy requirements of the flammable mixture.'

Electra-explosive devices are particularly susceptible to static discharge. The primary method used to neutralize static potential is to create an electrical path between the objects so that the potential charges will be equalized. This path can be generated by bonding potential charged objects to each other and humidifying or ionizing the air to create a path for the charge to bleed off.

Both NASA and DOD have standards to control static electricity. For example, they have standards' to prevent static electricity accumulations that are capable of initiating combustible dusts, gases, flammable vapors, or exposed electroexplosive devices. The standards build on the National Electrical Code, published by the National Fire Protection Association as NFPA 70, which establishes standards for the design and installation of electrical equipment and wiring in hazardous locations containing combustible dusts, flammable vapors and gasses.

These standards require personnel and equipment in hazardous locations and locations where static sensitive EEDs are exposed to be grounded in a manner to effectively discharge static electricity. For example, the NASA standard requires

---

'NASA Standard at 5-29.

[8] DOD Standard, chapter 6, NASA Standard, chapter 5.

personnel to wear static dissipation devices such as legstats and wriststats. Conductive shoes are required when handling, installing. or connecting or disconnecting EEDs.

Solid rocket motors may also be initiated by static electricity. Material contact, specifically. the rubbing or removing of one material from another, such as removing tooling from a motor, can produce a static charge buildup in solid rocket motors. This energy, when released under appropriate conditions. may lead to a cascade discharge and propellant ignition. A number of incidents have occurred due to static electricity, including a Pershing II missile bum in West Germany, a Stage I Peacekeeper missile initiation at a manufacturing facility (due to the pulling of a tool), and a Minuteman Stage II missile ignition on the rapid pulling of the core.[9]

Although the control of static electricity is important for public safety, the FAA is not proposing any requirements in this rulemaking. The FAA believes that the control of static electricity in launch operations is primarily procedural in nature, and is best covered by the FAA in a future rulemaking on launches. The FAA is interested in the public's view on whether requirements should be placed on launch site operators.

Electric Supply Systems.

As noted above, rocket motors may be energized to dangerous levels by extraneous electricity such as fields around high tension wires. Both the NASA standard, chapter 5, and DOD STD 6055.9, chapter 6, have similar standards to address the hazards from fields around high tension wires.

The FAA proposes rules that are similar to both the NASA and DOD standard. As in those standards, the proposed rules require electric power lines to be no closer to an

[9] "JANNAF Propulsion Systems Hazards Subcommittee Electrostatic Discharge Panel Report," CPIA Publication 5 10 (Mar. 1989).

explosive hazard facility than the length of the lines between the poles or towers that support the lines. unless effective means is provided to ensure that energized lines cannot. on breaking, come in contact with the explosive hazard facility. The proposed rules also require towers or poles supporting electric distribution lines that carry between 15 and 69 KV. or electrical transmission lines that carry 69 KV or more. to be no closer to an explosive hazard facility than the public area distance for that explosive hazard facility.

Electromagnetic Radiation.

Rocket motors may be energized to dangerous levels by extraneous electricity such as radio frequency emissions from radio, radar, and television transmitters. Radio frequency (RF) emitters may present a hazard to the public by direct exposure to high levels of RF energy. The levels of RF energy that are hazardous are dependent on frequency. For instance, "ANSI C95.1- 199 1 Electromagnetic Fields, Safety Levels With Respect to Human Exposure to Radio Frequency" defines the maximum safe level for personnel for frequencies between 0.003 and 0.1 MHz at 100 mW/cm^2, and a level of 180 mW/cm^2 for frequencies between 1.34 and 3.0 MHz. More importantly for this proposal, RF emitters may present a hazard to ordnance. At launch sites today, design and procedural methods are used to mitigate risks to personnel and ordnance. Separation distances are also used to ensure personnel and ordnance are not exposed to hazardous levels.

One hazard of particular importance on a launch site is the accidental firing of electroexplosive devices by stray electromagnetic energy. A large number of these devices are initiated by low levels of electrical energy and are susceptible to unintentional ignition by many forms of direct or induced stray electrical energy, such as from

lightning discharges. static electricity. and radio frequency energy due to ground and airborne emitters.

One federal launch site operator, the U.S. Air Force, defines its RF requirements in "Air Force Manual (AFM) 9 l-201, Explosives Safety Standards." (Jan. 1998). Safe separation distance criteria are contained in section 2.58. A table is provided that gives minimum separation distances between EEDs (within explosive hazard facilities) and the transmitting antenna of all RF emitters. The distances are based on the frequency, transmitter power, and power gain ratio of the transmitting antenna. For worst-case situations, safe separation distances are based on frequency and effective radiated power. "Worst-case" is defined as EEDs that are the most sensitive in the Air Force inventory, unshielded, having leads or circuitry which could inadvertently be formed into a resonant dipole, loop or other antenna. Where EEDs are in less hazardous configurations, the standard allows for shorter distances. The standard also allows for the conduct of power density surveys to ensure safety, in lieu of using the minimum safe separation distances defined from the table and figure. Power density surveys measure the actual conditions in an area where EEDs may be located, and are appropriate when the minimum distances cannot be complied with, for whatever reason, and when more than one transmitter is operating in a certain area at different frequencies.

The FAA has not chosen to specifically address RF hazards in this proposal. OSHA covers direct exposure of personnel to RF.[10] Although the FAA is not aware of any other federal regulations that specifically protect the public from the accidental firing of electroexplosive devices by stray electromagnetic energy, the FAA with this proposal is focussing on those measures that a launch site operator must build into its facilities.

The distance requirements discussed above were considered by the FAA but other procedural means exist to mitigate RF hazards. including the FAA's proposed scheduling and coordination requirement for launch site operators. The procedural requirements of launch operators. covered in a separate rulemaking, in conjunction with the requirement in proposed section 420.5 for a licensee to develop and implement procedures to coordinate operations carried out by launch site customers and their contractors, should prove adequate to address RF hazards. The FAA is interested in the public's view on whether other requirements, such as distance requirements, should be placed on launch site operators.

D. Launch Site Location Review

The FAA intends a launch site location review to determine whether the location of a proposed launch site would jeopardize public health and safety. To that end, the FAA proposes to determine whether at least one hypothetical launch could take place safely from a launch point at the proposed site. The FAA does not intend to license the operation of a launch site from which a launch could never safely take place. An applicant should, however, bear in mind that an FAA license to operate a launch site does not guarantee that a launch license would be issued for any particular launch proposed from that site. Accordingly, much of the decision making with respect to whether a particular site will be economically successful will rest, as it should, with a launch site operator, who will have to determine whether the site possesses sufficient flight corridors for economic viability. The FAA seeks through a location review only to ensure that at least one flight corridor exists that may be used safely for a hypothetical launch.

---

[10] 29 CFR 1910.97.

Accordingly, prior to issuing a license to operate a launch site at the proposed location, the FAA will ascertain whether it is possible to launch at least one type of launch vehicle on at least one trajectory from each launch point at the proposed site while meeting the FAA's collective risk criteria. The FAA wants to ensure that there exists at least one flight corridor or set of impact dispersion areas from a proposed launch site that would contain debris away from population. Launch is a dangerous activity that the FAA will allow to occur only when the risk to people is below an expected casualty (E,) of 30 x 10^{-6}. In other words, if there are too many people around a launch site or in a flight corridor the FAA will not license the site. The FAA's proposed methods for determining flight corridors and impact dispersion areas and estimating E_c are designed to ascertain whether a hypothetical flight corridor would avoid creating too much risk.

All this is not to say that the FAA proposes to require an applicant for a license to operate a launch site to perform a complete flight safety analysis for a particular launch. The FAA recognizes that an applicant may or may not yet have customers or a particular launch vehicle in mind. Accordingly, the FAA's proposed launch site location review methods only approximate, on the basis of certain assumptions and recognizing that not all factors need to be taken into account, a full flight safety analysis that would be normally be performed for an actual launch. Of course, if an applicant does have a customer who satisfies the FAA's flight safety criteria for launch and obtains a license for launch from the site, that showing would also demonstrate to the FAA that a launch may occur safely from the proposed site, and the FM could issue a license to operate the launch site on the basis of the actual launch proposed.

Bear in mind also that the focus of FAA's proposed launch site location review methods is on expendable launch vehicles with a flight history. The reusable launch vehicles (RLV) currently proposed by industry vary quite a bit. Accordingly, the FAA considered it unwise to define a detailed analytical method for determining the suitability of a launch site location for RLVs. An applicant proposing a launch site limited to the launch of reusable launch vehicles would still need to define a flight corridor and conduct a risk analysis if population were present within the flight corridor, but the FAA will review such an analysis on a case-by-case basis consistent with the principles discussed in this rulemaking..

Similarly, the FAA has chosen not to define a detailed analytical method for determining the suitability of a launch site location for unproven launch vehicles. An applicant proposing a launch site limited to the launch of unproven launch vehicles would have to demonstrate to the FAA that the launch site is safe for the activity planned.

A launch site location review would provide an applicant with alternative methods for demonstrating that a proposed launch site satisfies FAA safety requirements. Specifically, the applicant must demonstrate that a flight corridor or set of impact dispersion areas exist that do not encompass populated areas or that do not give rise to an E_c risk of greater than 30 x 10". Each proposed launch point must be evaluated for each type of launch vehicle, whether expendable orbital, guided sub-orbital or unguided sub-orbital, or reusable, that an applicant proposes would be launched from each point.

Each of the three methods the FAA proposes for evaluating the acceptability of a launch site's location require an applicant to identify an area, whether a flight corridor or a set of impact dispersion areas, emanating from a proposed launch site. That area

identities the public that the applicant must analyze for risk of impact and harm. The FAA proposes to have an applicant who anticipates customers who use guided orbital launch vehicles define a flight corridor for a class of vehicles launched from a specific point along a specified trajectory, that extends 5.000 nautical miles from the launch point or until the launch vehicle's instantaneous impact point leaves the earth's surface, whichever is sooner. For guided sub-orbital launch vehicles. the flight corridor would end at an impact dispersion area of a final stage. An applicant would have to demonstrate either that there are no populated areas within the flight corridor or that the risk to any population in the corridor does not exceed the FAA's risk criteria. Similarly, for the sub-orbital launch of an unguided vehicle, an applicant would analyze the risks associated with a series of impact dispersion areas around the impact points for spent stages. If there are people in the dispersion areas, the applicant must demonstrate that the expected casualties from stage impacts do not exceed the FAA's risk criteria.

E_c, or casualty expectancy, represents the FAA's measure of the collective risk to a population exposed to the launch of a launch vehicle. The measure represents the expected average number of casualties for a specific launch mission. In other words, if there were thousands of the same mission conducted and all the casualties were added up and the sum divided by the number of missions, the answer and the mission's expected casualty should statistically be the same. This E_c value defines the acceptable collective risk associated with a hypothetical launch from a launch point at a launch site, and, as prescribed by the proposed regulations, shall not exceed an expected average number of casualties of 0.00003 (30×10^{-6}) for each launch point at an applicant's proposed launch site. This E_c value defines acceptable collective risk. In contrast to individual risk,

which describes the probability of serious injury or death to a single person. the launch industry's common measure of risk is collective risk. The E_c value proposed originated with the Air Force's measure of acceptable risk. "EWR 127-1." Sec. 1.4. 1-12. Relying on the Air Force measure, the FAA proposed the adoption of collective risk and a risk level of 30×10^{-6} for licensed launches in an earlier proceeding. "Commercial Space Transportation Licensing Regulations," 62 FR 13216, 13229-30 (Mar. 19, 1997). The FAA now proposes to use the same measure for evaluating the suitability of a proposed launch site location.

Collective risk reflects the probability of injury or death to all members of a defined population set-in this case, those located within the flight corridor or set of impact dispersion areas being analyzed-placed at risk by a launch event. Collective risk constitutes the sum total launch related risk, that is, the probability of injury or death, to that part of the public exposed to a launch. Collective risk is analogous to an estimate of the average number of people hit by lightning each year, while individual annual risk would be an individual's likelihood of being hit by lightning in any given year. Collective risk may be expressed in terms of individual risk if certain factors associated with any given launch are taken into account. Collective risk may be expressed in terms of individual risk when the exposed population consists of one person. Also, individual risk may be-and will be, in most instances--less than collective risk, depending on the size of the population exposed. For example, a collective E_c risk of 30×10^{-6} for a defined population of one hundred thousand people exposed to a particular launch results (assuming the risk is spread equally throughout the defined population) in a probability of injury or death to any one exposed individual of 3×10^{-10} (three per ten billion).

The FAA's proposed methods for identifying a flight corridor or impact dispersion areas distinguish between guided orbital launch vehicles with a flight termination system (FTS), guided sub-orbital launch vehicles with an FTS. and unguided sub-orbital launch vehicles without an FTS.[11] For purposes of this proposal. references to a guided launch vehicle. whether orbital or sub-orbital, may be taken to mean that the vehicle has an FTS. References to an unguided sub-orbital may be understood to mean that the vehicle does not possess an FTS.

The FAA's proposed regulations divide guided orbital launch vehicles into four classes, with each class defined by its payload weight capability, as shown in table 1. Sub-orbital launch vehicles are not divided into classes by payload weight, but are categorized as either guided or unguided. Table 2 shows the payload weight and corresponding classes of existing orbital launch vehicles. For a launch site intended for the use of orbital launch vehicles, an applicant would define a hypothetical flight corridor from a launch point at the proposed launch site for the largest launch vehicle class anticipated- which the FAA anticipates would be based on expected customers.

[11] This proposal does not propose a means for analyzing risks posed by a launch site for the launch of unguided suborbital launch vehicles that employ FTS. Historically, few of these vehicles have been launched. In the event an applicant for a license to operate a launch site wishes to operate a launch site only for such vehicles, the FAA will handle the request on a case by case basis. The FAA does note, however, that unguided suborbital launch vehicles that in the past have been launched with an FTS were usually launched with the FTS because the launch was otherwise too close to populated areas for the type of vehicle and trajectory flown.

Table 1
Class of Launch Vehicles by Payload Weight (lbs)

Orbital Launch Vehicles				
100 nm Orbit	Small	Medium	Medium Large	Large
28° inc.[1]	≤4.400	4,400 to ≤ 11.100	>11.100 to ≤ 18.500	> 18.500
90° inc.-	≤3.300	>3,330 to ≤ 8.400	>8,400 to <15.000	> 15,000

1. 28° inclination orbit from a launch point at 28° latitude.
2. 90" inclination orbit.

Table 2
Classification of Common Guided Orbital Expendable Launch Vehicles

Vehicle	Payload Weight (lbs)	Payload Weight (lbs)	Class
	100 nm Orbit 28" inc.	100 nm Orbit 90" inc.	
Conestoga 1229	600	450	Small
Conestoga 1620	2,250	1,750	Small
LMLV- 1	1,755	1,140	Small
LMLV-2	4,390	3,290	Small
Pegasus	700	N/A	Small
Pegasus XL	1,015	769	Small
scout	560	460	Small
Taurus	3,100	2,340	Small
Atlas II	14,500	12,150	Medium
Atlas 2A	16,050	13,600	Medium
Delta 6920	8,780	6,490	Medium
Delta 7920	11,220	8,575	Medium
Titan II	N/A	4,200	Medium
Atlas 2AS	19,050	16,100	Medium/Large
Titan III	31,200	N/A	Medium/Large
Titan IV	47,400	41,000	Large

Methods for estimating the risk posed by the operation of a launch site for guided orbital and sub-orbital launch vehicles are presented in proposed appendices A. B and C. Appendix A contains instructions for creating a flight corridor for guided orbital and sub-orbital launch vehicles. Appendix B provides an alternative method to appendix A. Appendix B also instructs an applicant how to create a flight corridor for guided launch vehicles. but provides more detailed calculations to employ so that, although an appendix B flight corridor is typically less conservative than that of appendix A, it should prove more representative of actual vehicle behavior. Appendix C contains the FAA's proposed method for applicants to analyze the risk posed by guided launch vehicles within a flight corridor created under Appendix A or B. Unguided sub-orbital launch vehicles are presented in appendix D, which describes how an applicant should estimate impact dispersion areas and analyze the risk in those areas.

Appendix A is less complex, but generates a larger flight corridor, than the methodology of appendix B. No local meteorological or vehicle trajectory data are required to estimate a flight corridor under appendix A. Because it is a simpler methodology, an applicant may want to use it as a screening tool. If an applicant can define a flight corridor for a single trajectory, using appendix A, that does not overfly populated areas, the applicant may satisfy the launch site location review requirements with the least effort. If, however, the corridor includes populated areas, the applicant has the choice of creating an appendix B flight corridor, which may be more narrow, or conducting a casualty expectancy analysis. An applicant is not required to try appendix A before employing appendix B.

The FAA's proposed location review reflects a number of assumptions designed to keep the review general rather than oriented toward or addressing a particular launch. These assumptions are discussed more fully below, but may be summarized briefly. The location reviews for appendices A and B flight corridors reflect an attempt to ensure that launch failure debris would be contained within a safe area. Successful containment must assume a perfectly functioning flight termination system. A perfectly functioning flight termination system would ensure that any debris created by a launch failure would be contained within a flight corridor. When the high risk event is not launch failure but launch success. as tends to be the case with an unguided sub-orbital launch vehicle that does not employ an FTS, the FAA still proposes a location review based on an assumption of containment.

The approaches provided in the four proposed location review appendices are based on some common assumptions that reflect limitations of the launch site location review analysis. The FAA is not requiring an applicant to analyze the risks posed to the public by toxic materials that might be handled at the proposed site, nor the risk to ships or aircraft from launch debris or planned jettisoning of stages. The FAA recognizes that these assumptions represent a limitation in the launch site location review. The FAA intends that these three risks will be dealt with through pre-launch operational controls and launch commit criteria which will be better identified as part of a launch license review. **All** launches that take place from an approved U.S. launch site will either be regulated by the FAA through a launch license or will be U.S. government launches that the government carries out for the government.

The two methods for creating guided launch vehicle flight corridors are intended to account for launch vehicle failure rate. malfunction turn capability. and the launch vehicle guidance accuracy as defined by the impact dispersions of these vehicles. The premise undergirding each of these proposed methods is that debris would be contained within the defined flight corridor or impact dispersion areas. Accordingly, for purposes of a launch site location review, only the populations within the defined areas need to be analyzed for risk. The FAA recognizes that were a flight termination system to fail to destroy a vehicle as intended, a launch vehicle could stray outside its planned flight corridor. That concern will be better accommodated through another forum, namely, the licensing of a launch operator and the review of that launch operator's flight safety system. Because a containment analysis only looks at how far debris would travel in the event an errant vehicle were destroyed, the containment analysis has to assume a perfectly functioning flight termination system. In other words, for purposes of analyzing the acceptability of a launch site's location for launching guided expendable launch vehicles, the FAA will assume that a malfunctioning vehicle will be destroyed and debris will always impact within acceptable boundaries. Accordingly, the FAA does not propose to explore, for purposes of determining the acceptability of a launch site's location, the possibility that a vehicle's flight termination system may fail and that the vehicle could continue to travel toward populated areas. Any proposed site may present such risks-indeed, any proposed launch presents such risks-but they are best addressed in the context of individual launch systems. This working assumption of a perfectly reliable flight termination system will not, of course, apply to the licensing of a launch of a launch vehicle. The FAA will consider the reliability of any particular launch vehicle's

FTS in the course of a launch license review. From a practical standpoint. this means that for the launch site location review, both nominal and failure-produced debris would be contained within a flight corridor. obviating the need for risk analyses that address risk outside of a defined flight corridor or set of impact dispersion areas.

Additionally, the FAA does not propose to require an applicant to analyze separately the risks posed by the planned impact of normally jettisoned stages from a guided expendable launch vehicle, except for the final stage of a guided sub-orbital launch vehicle. The FAA does not consider intermediate stage impact analysis necessary to assess the general suitability of a launch point for guided expendable launch vehicles because the impact location of stages is inherently launch vehicle-specific, and the trajectory and timing for a guided launch vehicle can normally be designed so that the risks from nominally jettisoned stages will be kept to acceptable levels. A launch license review will have to ensure that vehicle stages are not going to impact in densely populated areas. Risk calculations performed for launches from federal launch ranges demonstrate a relatively low risk posed by controlled disposition of stages in comparison to the risk posed by wide-spread dispersion of debris due to vehicle failure.

Each of the FAA's proposed approaches to defining flight corridors or impact dispersion areas is designed to analyze the highest risk launch event associated with a particular vehicle technology. This is not meant to imply that lower risk launch events are necessarily acceptable; only that they will not be considered in the course of this review. For a guided orbital launch vehicle, that event is vehicle failure. For an unguided sub-orbital launch vehicle, the launch event of highest risk is vehicle success, namely, the predicted impact of stages.' For a guided launch vehicle the overflight risk,

which results from a vehicle failure followed by its destruction (assuming no FTS failure). is the dominant risk. Risks from nominally jettisoned debris are subsumed in the overflight risk assessment. For an unguided sub-orbital launch vehicle, the FAA proposes that risk due to stage impact be analyzed instead of the overflight risk. This distinction is necessitated by the fact that the failure rate during thrust is historically significantly lower for unguided vehicles than for guided vehicles. Current unguided launch vehicles with many years of use are highly reliable. They do not employ an FTS; therefore, debris pieces usually consist of vehicle components that are not broken up. Another reason for the difference between analyses is that unguided vehicle stage impact dispersions are significantly larger than guided vehicle impact dispersions. These differences add up to greater risk within an unguided launch vehicle stage impact dispersion area than the areas outside the dispersion areas. Therefore, a risk assessment is only performed on those populations within an unguided launch vehicle stage impact dispersion area.

An applicant must define an area called an overflight exclusion zone (OEZ) around each launch point, and the applicant must demonstrate that the OEZ can be clear of the public during a launch. An OEZ defines the area where the public risk criteria of 30×10^{-6} would be exceeded if one person were present in the open. The overflight exclusion zone was estimated from risk computations for each launch vehicle type and class. An applicant must define an OEZ because launch vehicle range rates are slow in the launch area, launch vehicle effective casualty areas, the area within which all casualties are assumed to occur through exposure to debris, are large, and impact dispersion areas are dense with debris so that the presence of one person inside this

hazardous area is expected to produce E_c values exceeding the public risk criteria. Accordingly, an applicant would either have to own the property, demonstrate to the FAA that there are times when people are not present. or that it could clear the public from the overflight exclusion zone prior to a launch. Evacuating an overflight exclusion zone for an inland site, might. for example. require an applicant to demonstrate that agreements have been reached with local officials to close any public roads during a launch. The FAA seeks comments on the feasibility of evacuating areas inland and on the impact of the OEZ requirement on the ability to gain a license for an inland site.

E. License Conditions

A license may contain conditions flowing from the various reviews conducted during the application process. For example, a license granted following approval of a launch site location would be limited to the launch points analyzed, and the type and class of vehicle used in the demonstration of site location safety. An applicant may choose to analyze all three types of launch vehicles in its application. An FAA launch site operator license authorizing the operation of a launch site for launch of an orbital expendable launch vehicle would allow the launch of vehicles from the site that were less than or equal to the class of launch vehicle, based on payload weight, used to demonstrate the safety of the site location. If a licensee later wanted to offer the launch site for the launch of a larger class of vehicles or a different type of launch vehicle, such as an unguided sub-orbital launch vehicle, the licensee would be required to request a license modification and demonstrate that the larger vehicle or different type of vehicle could be safely launched from the launch site. Likewise, the addition of a new launch point would require a license modification. The demonstration would be based on the same kinds of

analyses used for the original license. In some cases. a licensee might be able to use the safety analyses performed by a launch operator to meet location review requirements.

Although the authority granted by the launch site operator license would be limited to certain types or classes of vehicles, the license would not represent a guarantee that the FAA would necessarily license any particular launch from an approved launch site. The demonstration is intended to ensure that the location of the launch site can safely support at least some type of vehicle, launched on a specific trajectory. The planned launch of an actual vehicle may differ from the hypothetical trajectory or vehicle characteristics used for the launch site location demonstration, potentially posing different risks to the public than those used in the site location demonstration. In addition to the protection provided by a safe launch site location, the safety of any actual flight of a launch vehicle will be dependent on the safety procedures, personnel qualifications, safety systems, and other elements of the proposed launch. Consequently, each launch operator, other than the U.S. Government, must obtain a launch license for its specific operations.

F. Operational Responsibilities

The FAA is proposing to impose certain operational responsibilities on an operator of a launch site. In addition, the FAA proposes to distinguish between activities covered by a license to operate a launch site and those covered by a launch license. Any activity that will be approved as part of a launch license will not be covered in a launch site operator license even if the launch site operator provides the service. For example, because a launch licensee will need to assure the adequacy of ground tracking, approval of ground tracking systems will be handled in the launch license process even if a launch

site operator provides the service. Similarly, in the case of ground safety. a launch site operator may provide fueling for a launch licensee, but safe procedures for fueling will be addressed in the launch license.

The operational requirements being proposed for the operator of a launch site addresses control of public access, scheduling of operations at the site, notifications. recordkeeping. launch site accident response and investigation, and explosive safety. A launch site operator licensee would be required to control access to the site. Security guards, fences, or other physical barriers may be used. Anyone entering the site must, on first entry, be informed of the site's safety and emergency response procedures. Alarms or other warning signals would be required to alert persons on the launch site of any emergency that might occur when they are on site. If a launch site licensee has multiple launch customers on site at one time, the licensee must have procedures for scheduling their operations so that the activities of one customer do not create hazards for others.

Because it is more efficient to have a single point of contact for launches conducted at a site, the FAA is proposing that the launch site operator be responsible for all initial coordination with the appropriate FAA regional office having jurisdiction over the airspace where launches will take place and the U.S. Coast Guard (where applicable) through a written agreement. The FAA's Air Traffic Service and the Coast Guard issues Notices to Airmen and Mariners, respectively, to ensure that they avoid hazardous areas. An FAA Air Route Traffic Control Center also closes airways during a launch window, if necessary. A launch site operator would be required to obtain an agreement regarding procedures for coordinating contacts with these agencies for launches from the site. The requirement for coordinating with the Coast Guard might not, of course, always be

applicable. for esample. for an inland launch site. A launch site operator licensee would also have to notify local officials with an interest in the launch. These would include officials with responsibilities that might be called into play by a launch mishap, such as fire and emergency response personnel.

Another operational requirement being proposed is for the operator of a launch site to develop and implement a launch site accident investigation plan containing procedures for investigating and reporting a launch site accident. This would extend similar reporting, investigation and response procedures currently applicable to launch related accidents and incidents to accidents occurring during ground activities at a launch site. Lastly, an operator of a launch site would have responsibilities regarding explosives, specifically, those dealing with lightning and electric power lines. This has been discussed above.

III. Part Analysis

Part 417-License to Operate a Launch Site.

The FAA removes and reserves part 417 and creates part 420 to address licensing and operation of a launch site.

Part 420-License to Operate a Launch Site.

Proposed section 420.1 would describe the scope of proposed part 420. Part 420 would encompass the requirements for obtaining a license to operate a launch site and with which a licensee must comply.

Proposed section 420.3 would specify the person who must apply for a license to operate a launch site, and the person who must comply with regulations that apply to a licensed launch site operator. Because a launch site operator is someone who offers a

launch site to others for launch. only someone proposing such an offer need obtain a license to operate a launch site. A launch operator proposing to launch from its own launch site need only obtain a launch license because a launch license will address safety issues related to a specific launch and because a launch license encompasses ground operations.

Proposed section 420.5 would add terms that have not been previously defined by the FAA. These definitions would apply in the context of part 420, which governs the licensing and safety requirements for operation of a launch site. These terms do not apply outside part 420. Specifically, the following terms would be defined:

Ballistic Coefficient (β) means the weight (W) of an object divided by the quantity product of the coefficient of drag (Cd) of the object and the area (A) of the object.

$$\beta = \frac{W}{(C_d \cdot A)}$$

A ballistic coefficient is a parameter used to describe flight characteristics of an object.

Compatibility means the chemical property of materials that may be located together without adverse reaction. Compatibility in storage exists when storing materials together does not increase'the probability of an accident or, for a given quantity, the magnitude of the effects of such an accident. Compatibility determines whether materials require segregation. The FAA derived this definition from a NASA definition, which states that compatibility is "the chemical property of materials to coexist without adverse reaction for an acceptable period of time. Compatibility in storage exists when storing materials together does not increase the probability of an accident or, for a given quantity, the magnitude of the effects of such an accident. Storage compatibility groups are

assigned to provide for segregated storage.“”[12] The FAA proposes to adapt the NASA definition in order to describe coexistence with greater specificity.

Debris dispersion radius (D_{max}) means the estimated maximum distance from a launch point that debris travels given a worst-case launch vehicle failure and flight termination at 10 seconds into flight. If a launch vehicle failure occurs shortly after ignition. and a flight termination system is employed. the FAA expects the debris to be contained within an area described by D,,.

Division 1.3 explosive means an explosive as defined in 49 CFR § 173.50. That provision is part of the hazardous materials regulations of the Research and Special Programs Administration (RSPA) of the Department of Transportation. Section 173.50 defines a division 1.3 explosive as “. . .consist[ing] of explosives that have a fire hazard and either a minor blast hazard or a minor projection hazard or both, but not a mass explosion hazard.” This classification is identical to the United Nations Organization classification, and is also used by NASA and the Department of Defense.

Downrange area means a portion of a flight corridor beginning where a launch area ends and ending 5,000 nautical miles (nrn) from the launch point for an orbital launch vehicle, and ending with an impact dispersion area for a guided sub-orbital launch vehicle.

E,F,G coordinate system means an orthogonal, Earth-fixed, geocentric, right-handed system. The origin of the coordinate system is at the center of an ellipsoidal Earth model. The E-axis is positive directed through the Greenwich meridian. The F-axis is positive directed though 90 degrees east longitude. The EF-plane is coincident

[12] NASA Standard at A-2.

with the ellipsoidal Earth model's equatorial plane. The G-axis is normal to the EF-plane and positive directed through the north pole.

E.N.U coordinate system means an orthogonal. Earth-fixed. topocentric. right-handed system. The origin of the coordinate system is at a launch point. The E-axis is positive directed east. The N-axis is positive directed north. The EN-plane is tangent to an ellipsoidal Earth model's surface at the origin and perpendicular to the geodetic vertical. The U-axis is normal to the EN-plane and positive directed away from the Earth.

Effective casualty area (A_c) means the aggregate casualty area of each piece of debris created by a launch vehicle failure at a particular point on its trajectory. The effective casualty area for each piece of debris is the area within which 100 percent of the unprotected population on the ground are assumed to be a casualty, and outside of which 100 percent of the population are assumed not to be a casualty. This area is based on the characteristics of the debris piece including its size, the path angle of its trajectory, impact explosions, and debris skip, splatter, and bounce.

Explosive means any chemical compound or mechanical mixture that, when subjected to heat, impact, friction, detonation or other suitable initiation, undergoes a rapid chemical change that releases large volumes of highly heated gases that exert pressure in the surrounding medium. The term applies to materials that either detonate or deflagrate. With the exception of a minor editorial change, this proposed definition is identical to that of NASA.[13] For comparison, 49 CFR § 173.50 of RSPA's regulations defines an explosive as, "...any substance or article . . . which is designed to function by explosion . . . or which, by chemical reaction within itself, is able to function in a similar

manner even if not designed to function by explosion.. .[13] Both definitions are consistent with each other. and the FAA proposes to use the NASA definition because it is more descriptive.

Explosive equivalent means a measure of the blast effects from explosion of a given quantity of material expressed in terms of the weight of trinitrotoluene (TNT) that would produce the same blast effects when detonated. This proposed definition is identical to the NASA definition for "TNT equivalent," and similar to the DOD definition of "explosive equivalent" which defines the term, in relevant part, as "[t]he amount of a standard explosive that, when detonated, will produce a blast effect comparable to that which results at the same distances from the detonation or explosion of a given amount of the material for which performance is being evaluated."[14] DOD uses TNT as the standard explosive, thus rendering the NASA and DOD terms interchangeable. FAA proposes to use the more general term "explosive equivalent" instead of 'TNT equivalent."

Explosive hazard facility means a facility at a launch site where solid or liquid propellant is stored or handled. The FM proposes to define this term for the purpose of identifying specific hazard facilities on a launch site that present potential explosive hazards. NASA and DOD use the more general term "potential explosive site," which is defined, in part, as "the location of a quantity of explosives that will create a blast fragment, thermal, or debris hazard in the event of an accidental explosion of its contents.

[13] NASA Standard at A-4.
[14] DOD Standard at A-4.

. . ."[15] As proposed. an explosive hazard facility may include a location where explosives are either handled or stored.

Flight azimuth means the initial direction in which a launch vehicle flies relative to true north expressed in degrees-decimal-degrees. For example, due east is 90 degrees.

Flight corridor means an area on the earth's surface estimated to contain the majority of hazardous debris from nominal and non-nominal flight of an orbital or guided sub-orbital launch vehicle.

Guided sub-orbital launch vehicle means a sub-orbital rocket that employs an active guidance system.

Impact dispersion area means an area representing an estimated five standard deviation dispersion about a nominal impact point of an intermediate or final stage of a sub-orbital launch vehicle. This definition is confined to proposed part 420, and should not be confused with other impact dispersion areas that may be defined by the federal launch ranges for their particular launch safety programs.

Impact dispersion factor means a constant used to estimate, using a stage apogee, a five standard deviation dispersion about a nominal impact point of an intermediate or final stage of a sub-orbital launch vehicle. Intermediate stages include all stages up to the final stage.

Impact dispersion radius (R_i) means a radius that defines an impact dispersion area. It applies to all launch vehicle stages.

Impact range means the distance between a launch point and the impact point of a sub-orbital launch vehicle stage.

[15] DOD Standard at A-7; NASA Standard at A-9.

Impact range factor means a constant used to estimate. with the use of a launch vehicle stage apogee, the nominal impact point of an intermediate or final stage of a sub-orbital launch vehicle.

Instantaneous impact point (IIP) means an impact point. following thrust termination of a launch vehicle, calculated in the absence of atmospheric drag effects. that is. a vacuum. This shows the point at which launch vehicle debris would land in the event thrust was terminated. In this proposal. the IIP calculations would assume a vacuum.

Instantaneous impact point (IIP) range rate means a launch vehicle's estimated IIP velocity along the Earth's surface. It is typically abbreviated as $\dot{R}$, or R-dot.

Intraline distance means the minimum distance permitted between any two explosive hazard facilities in the ownership, possession or control of one launch site customer. Intraline distance prevents the propagation of an explosion. In other words. with an appropriate intraline distance, an explosive mishap at one explosive hazard facility would not cause an explosive event at another explosive hazard facility. The FAA anticipates that worker safety requirements will dictate protection of employees and anticipates that all licensees will familiarize themselves with those requirements and conform to them in accordance with the law. Unlike distances used to protect the public, intraline distance will not protect workers with the same level of protection as the public. NASA defines intraline distance as "[t]he distance to be maintained between any two operating buildings and sites within an operating line, of which at least one contains or is designed to contain explosives, . . .".[16] Thus, for NASA, the criteria for using intraline

[16] NASA Standard at A-7.

distance is whether the areas are within an operating line. An operating line is a "group of buildings used to perform the consecutive steps in the loading. assembling. modification. normal maintenance. renovation. or salvaging of an item or in the manufacture of an explosive or explosive device."[17] The FAA's proposed definition is more suitable to its statutory obligation to protect public safety because public safety dictates only that explosive hazard facilities of one launch operator be sited in a manner to prevent the propagation of an explosion. If intraline distances are not maintained between two explosive hazard facilities, then the larger area encompassing both quantities must be used for Q-D purposes when determining prescribed distances to the public.

Launch area means, for a flight corridor defined using appendix A, the portion of a flight corridor from the launch point to a point 100 nrn in the direction of the flight azimuth. For a flight corridor defined using appendix B, a launch area is the portion of a flight corridor from the launch point to the enveloping line enclosing the outer boundary of the last D_i dispersion circle.

Launch point means a point on the earth from which the flight of a launch vehicle begins, and is defined by the point's geodetic latitude, longitude and height on an ellipsoidal Earth model.

Launch site accident means an unplanned event occurring during a ground activity at a launch site resulting in a fatality or serious injury (as defined in 49 CFR § 830.2) to any person who is not associated with the activity, or any damage estimated to exceed $25,000 to property not associated with the activity. The FAA considers any licensee or its employees, or any licensee customer, contractor, or subcontractor or the

"NASA Standard at A-8.

employees of any of these persons to be associated with a ground activity. Property not associated with the activity will typically include any property belonging to members of the public or personal property of employees. Property associated with the activity includes the property of a launch site operator or launch licensee, or either licensee's customers. contractors or subcontractors.

Net explosive weight (NEW) means the total weight, expressed in pounds. of explosive material or explosive equivalency contained in an item. This term is used for applying Q-D criteria to solid propellants. and for liquid propellants when explosive equivalency applies. Explosive equivalency applies to liquid propellants when a liquid fuel and a liquid oxidizer are close enough together that their explosive potential combined must be used when determining prescribed distances to the public.

Nominal means, in reference to launch vehicle performance, trajectory, or stage impact point, a launch vehicle flight where all launch vehicle aerodynamic parameters are as expected. all vehicle internal and external systems perform exactly as planned, and there are no external perturbing influences (e.g., winds) other than atmospheric drag and gravity.

Nominal trajectory means the position and velocity components of a nominally performing launch vehicle relative to an x,y,z, coordinate system, expressed in $x, y, z, \dot{x}, \dot{y}, \dot{z}$. The x, y, z coordinates describe the position of the vehicle both for projecting the proposed flight path and during actual flight. The $\dot{x}$, $\dot{y}$, $\dot{z}$ variables describe the velocity of the vehicle.

Overflight dwell time means the period of time it takes for a launch vehicle's IIP to move past a populated area. For a given populated area, the overflight dwell time is

the time period measured along the nominal trajectory IIP ground trace from the time point whose normal with the trajectory intersects the most uprange part of the populated area to the time point whose normal with the trajectory intersects the most downrange part of the populated area.

Overflight exclusion zone means a portion of a flight corridor which must remain clear of the public during the flight of a launch vehicle.

Populated area means a land area with population. For a part 420 site location risk analysis of a populated area within the first 100 nm of a launch point, a populated area is no greater than a census block group in the U.S., and an equivalent size outside the U.S. For analysis of a part 420 flight corridor more than 100 run downrange from the launch point, a populated area is no greater than a 1° X 1° latitude/longitude grid, whether in the United States or not.

Population density means the number of people per unit area in a populated area.

Position data means data referring to the current position of a launch vehicle with respect to time using the X, Y, Z coordinate system.

Public area means any area outside an explosive hazard facility and is an area that is not in the possession, ownership or other control of a launch site operator or of a launch site customer who possesses, owns or otherwise controls that explosive hazard facility. For purposes of Q-D criteria, the proposed rules treat any location outside a launch site boundary as a public area for any activity at a launch site. Certain areas within a launch site are also considered public areas for purposes of applying Q-D criteria. With respect to any given launch operator, areas where other launch operators are located, or where the launch site operator is located, are public areas.

Public area distance means the minimum separation distance permitted between a public area and an explosive hazard facility. Although NASA and DOD differentiate between areas that contain inhabited buildings and areas that contain public traffic routes. uith inhabited buildings requiring greater separation distances. the FAA's proposed requirement does not make the same differentiation.[18] The FAA proposes to use NASA's and DOD's more conservative inhabited building distance as the required distance between an explosive hazard facility and all public areas. This is because a public area is not in the control of the applicant, and can, therefore. contain anything from open land to groups of office buildings. This is consistent with the approach taken by NASA and DOD for areas outside a launch site. For example, NASA defines inhabited building distance as "[t]he minimum allowable distance between an inhabited building and an explosive area. Inhabited building distances are used between explosives areas and administrative areas, also between operating lines with dissimilar hazards and between explosive locations and other exposures. Inhabited building distances will also be provided between explosive areas and Center boundaries.""

Unguided sub-orbital launch vehicle means a sub-orbital rocket that does not have a guidance system.

X.Y,Z coordinate system means an orthogonal, Earth-fixed, topocentric, right-handed system. The origin of the coordinate system is at a launch point. The X-axis coincides with the initial launch azimuth and is positive in the downrange direction. The Y-axis is positive to the left looking downrange. The XY-plane is tangent to the

[18] Nor does the FAA attempt to protect inhabited buildings that are not considered property of the public.
[19] NASA Standard at A-J.

ellipsoidal earth model's surface at the origin and perpendicular to the geodetic vertical. The Z-axis is normal to the XY-plane and positive directed away from the earth.

ϕ_0, λ_0, h_0 means a latitude. longitude. height system where ϕ_0 is the geodetic latitude of a launch point. λ_0 is the east longitude of the launch point, and h is the height of the launch point above a reference ellipsoid. ϕ_0 and λ_0 are expressed in degrees decimal degrees, which is abbreviated as DDD.

Proposed subpart B would contain the criteria and information requirements for obtaining a license to operate a launch site. Section 420.15 would specify the information that an applicant for a launch site license would have to submit as part of its license application. The FAA requires this information to evaluate environmental impacts, whether the launch site location could safely be used to conduct launches, issues affecting national security and foreign policy, explosive site safety, and whether the applicant will operate safely.

Proposed section 420.15(a) contains the environmental review requirements currently located at sections 4 17.105-l 07.

Proposed section 420.15(b) would provide the information necessary for a location review. It would also require foreign ownership information and an explosive site plan.

Proposed section 420.15(c) requires an applicant to demonstrate how it will satisfy its subpart D responsibilities. Specifically, a license applicant must show how the applicant proposes to control public access pursuant to section 420.53, how it proposes to comply with the scheduling requirements of section 420.55, and how it proposes to satisfy the notification obligations of section 420.57. The FAA requires this information

to ascertain whether an applicant will be able to satisfy the subpart D performance requirements and for compliance monitoring purposes. With regard to the notification obligations of section 420.57. an applicant must submit its agreements with the U.S. Coast Guard district and the FAA regional office for air traffic services to demonstrate satisfaction of the requirements of 420.57(b) and (c). A license applicant must also show how it proposes to comply with the accident investigation requirements in section 420.59 and requirements on explosives in section 420.63.

Proposed section 420.15(d) provides that an applicant who is proposing to locate a launch site at an existing launch point at a federal launch range is not required to perform a location review if a launch vehicle of the same type and class as proposed for the launch point has been safely launched from the launch point. An applicant who is proposing to locate at a federal launch range is not required to submit an explosive site plan.

Section 420.17 would establish the bases upon which the FAA will make its license determination. This includes the FAA's determination of the adequacy of information provided by the applicant, the conclusions of the environmental and policy reviews, the adequacy of the explosive site plan, and satisfaction of site location requirements. The FAA will notify the applicant of, and allow the applicant to address, any deficiencies in the application.

Section 420.19 would require an applicant to demonstrate that its proposed launch site location will allow for the safe launch of at least one type of launch vehicle by defining flight corridors or impact dispersion areas and estimating casualty expectancy.

Section 130.2 1 would require an applicant to specify which launch vehicle type and class would be launched from each launch point at the proposed launch site. This section also proposes to define the minimum distance from each launch point to a launch site boundary.[20] The three types of expendable launch vehicle proposed account for the critical distinctions between launch vehicles designed for orbital or sub-orbital flight, and between those with and without guidance systems. Guided orbital expendable launch vehicles typically require an FTS, which means that the greatest risk to the public stems from debris caused by destruction of a vehicle. Guided sub-orbital launch vehicles will be treated similarly to orbital launch vehicles, except for the nominal impact of the final stage. In contrast, unguided sub-orbital launch vehicles generally have high reliability levels, and therefore create the greatest public risk through nominal stage impact. The methods proposed in the appendices are designed to account for these differences in public risk. Orbital expendable launch vehicles are also sorted by class, which is determined by payload weight capacity. Minimum distances are based on actual computations for each of the launch vehicle types and classes. The safety of launch points for reusable launch vehicles will be evaluated on a case-by-case basis in a manner consistent with the principles expressed here.

Section 420.23 would state that the FAA will evaluate the adequacy of a launch site location for unproven launch vehicles on a case-by-case basis.

Subpart B also contains the FAA's proposed explosive facility siting standards for the protection of the public from launch site explosive hazards created by liquid and solid propellants. These standards would be used by an applicant to site facilities that support

[20] The FAA also proposes minimum distances between a launch point and a launch site boundary in its explosive site plan requirements in subpart B. Because both requirements apply, an applicant must apply

activities involving liquid and solid propellants. or facilities potentially esposed to such activities. and to document the layout of these facilities. [21]

In order to comply with proposed subpart B, an applicant would first determine those areas at its proposed launch site where solid or liquid propellant would be stored or handled. and which the FAA proposes to designate as explosive hazard facilities. They may include payload processing facilities. launch pads. propellant storage or transfer tanks. and solid rocket motor assembly buildings. An applicant must then determine the types and maximum quantity of propellants to be located at each explosive hazard facility. For solid propellants, the applicant would determine the total weight, expressed in pounds, of division 1.3 explosive material to be contained in the items that will be located at each explosive hazard facility. For liquid propellants, the applicant would determine either the explosive equivalency of a fuel and oxidizer combination if fuels and oxidizers would be located together at, what is referred to as, incompatible distances; or, if fuels and oxidizers would not be located together, an applicant would determine the net weight in pounds of liquid propellant in each explosive hazard facility.

The next step for an applicant would be to determine the minimum allowable separation distance between each explosive hazard facility and all other explosive hazard facilities, the launch site boundary, and other public areas such as the launch complex of another launch operator, public railways and highways running through the launch site, and any visitor centers. The distances between explosive hazard facilities are important to ensure that an explosive event in one explosive hazard facility would not cause an

---

the greater of the D_{max} or Q-D distance to accommodate the greater of the hazards.

[21] An analysis may include evaluations of blast hazards; fragment hazards; protective construction; grounding, bonding and lighming protection systems; electrical installations; natural or man-made terrain features; or other mission or local requirements.

explosive event in another explosive hazard facility. The distances between explosive hazard facilities and public areas are important to ensure that the public is protected from blast. debris. and thermal hazards. Exact distances must be given between the wall or comer of the facility closest to the closest wall or comer of other explosive hazard facilities and public areas. Minimum allowable distances are determined using tables in proposed appendix E. These tables reflect distances based on the type and quantity of propellant to be located within an explosive hazard facility. Determining the minimum allowable distance between two explosive hazard facilities is accomplished by applying the applicable criteria to each and then separating them by at least the greater distance prescribed for each explosive hazard facility. For example, if a certain amount of division 1.3 solid propellant would be located at explosive hazard facility A, and twice as much division 1.3 solid propellant would be located at explosive hazard facility B, the prescribed distance generated by explosive hazard facility B would serve as the minimum distance permitted between explosive hazard facility A and explosive hazard facility B.

Proposed section 420.3 l(a) would require an applicant to provide the FAA an explosive site plan that establishes that the applicant's proposed distances satisfy the explosive siting criteria. The explosive site plan must include a scaled map or maps that show the location of all proposed explosive hazard facilities where solid and liquid propellants would be stored or handled.** An applicant must include the class and division for each solid propellant and the hazard and compatibility group for each liquid propellant.

[22] Areas where solid propellants would be stored would be included in the plan even though ATF requirements apply. Applicants with magazines where solid propellants are to be stored must obtain an ATF permit and meet ATF quantity-distance requirements. The FAA will use the information to ensure that those of its requirements unrelated to storage are satisfied and to coordinate with ATF when necessary

In addition to the location of explosive hazard facilities. the map or maps would indicate actual and minimum allowable distances between each explosive hazard facility and other explosive hazard facilities and each public area. including the launch site boundary. One means by which an applicant could show that the distances are at least the minimum required in the proposed rules would be by drawing a circle or arc with a radius equal to the minimum allowed distance centered on each explosive hazard facility.

Unlike the DOD and NASA standards, which both define numerous separation distances. the proposed rules define only two distances for solid propellants, namely, a public area distance and an intraline distance. Public area distance would serve as the minimum distance permitted between a public area and an explosive hazard facility. Facilities and other infrastructure such as roads, railways, and inhabited buildings may or may not be public areas. depending on whether the public has access at the time explosives are present in the explosive hazard facility. Examples include a public road or railroad running through a launch site, and a visitor center where members of the public would be located." Likewise, different launch site customers are also considered the public with respect to each other. Intraline distance would provide the minimum distance permitted between any two explosive hazard facilities used by one launch site customer. In this regard, for planning purposes, an applicant should bear in mind that using the greater public area distance would avoid later operational constraints when different customers wanted to use facilities sited at intraline distances.

[23] A launch site operator who does not wish to employ the appropriate public area distance between an explosive hazard facility and public areas such as, for example. a visitor center, must propose operational limitations in its application. These would consist of such strictures as not allowing members of the public in the visitor center while explosives are present in the explosive hazard facility not sited according to the proposed requirements.

In addition to containing maps. an explosive site plan would also describe. through tables or lists. the maximum quantities of liquid and solid propellants to be located at each explosive hazard facility. and the activities to be conducted within each explosive hazard facility.

Pursuant to proposed section 420.3 l(b), the requirement to submit an explosive site plan to the FAA would not apply to an applicant applying for a license to operate a launch site at a federal launch range. Federal launch ranges have separate rules which are either identical or similar to the rules proposed, or require mitigation measures which otherwise ensure safety.

The criteria for determining the minimum required distances between each explosive hazard facility and all other explosive hazard facilities and each public area, including the launch site boundary, are proposed in section 420.33 for solid propellants and section 420.35 for liquid propellants. Proposed section 420.37 includes rules for when liquid and solid propellants are located together.

Proposed section 420.33 covers quantity determinations and minimum required distances for explosive hazard facilities where solid propellants would be handled. Under proposed section 420.33(a), an applicant would first determine the maximum total quantity of explosive in each explosive hazard facility where solid propellants would be handled. The total quantity of explosives in an explosive hazard facility shall be the maximum total weight, expressed in pounds, of division 1.3 explosive material in the contents of the explosive hazard facility. For example, if a facility could hold up to ten solid rocket motors of a particular type, even though it might only rarely hold that many

motors. the applicant would calculate the total weight of division 1.3 explosive material in the ten motors.

The proposed rules are based on an assumption that only division 1.3 solid propellant will be located at a launch site in sufficient quantities to affect facility location. The FAA is aware that the launch vehicle used for the first launch from Kodiak Launch Complex. a launch site operated by the recently licensed Alaska Aerospace Development Corporation (AADC), had a second stage motor with division 1.1 propellant. The FAA believes this will be a rare occurrence in the future. The FAA realizes that 1.1 explosives, such as those used in a launch operator's flight termination system, will also likely be located at a launch site. However, current practice is to design such components so as not to be able to initiate division 1.3 components when installed on a vehicle. The FAA anticipates that it will require any licensed launch operator to demonstrate that its 1.1 devices do not initiate 1.3 components as is the current practice at federal launch ranges. Therefore, the amount of such ordnance used with division 1.3 explosives may be disregarded for Q-D purposes. The total quantity of explosives shall be the NEW of the division 1.3 components.

Once an applicant has determined the total quantity of solid propellants in each explosive hazard facility, proposed section 420.33(b) would require an applicant to separate each explosive hazard facility where solid propellants will be handled from all other explosive hazard facilities and each public area, including the launch site boundary, in accordance with the minimum separation distances contained in proposed table E-l in appendix E. Table E-l provides two distances for each quantity level. The first, a public area distance, is the minimum distance permitted between a public area and an explosive

hazard facility. The second. an intraline distance. is the minimum distance permitted between any two explosive hazard facilities used by one launch site customer. Other explosive hazard facilities may constitute public areas. because the deiinition of public area includes any area in the possession or ownership, or otherwise under the control of a launch site operator's other customers. Distance calculations would be made accordingly. Table E-l contains the same distances as the NASA and DOD standards. except that the DOD standard has more increments. An applicant may use linear interpolation for quantity values between those provided in the table. Additionally, because table E- 1 does not include quantities greater than 1 ,OOO,OOO pounds, an applicant with an explosive hazard facility where solid propellants in quantities greater than 1,000,000 pounds would be handled would use the equations proposed in section 420.33(b) to obtain separation distances.

An applicant would measure a separation distance from the closest source of debris or hazard under proposed section 420.33(c). For example, for a building, an applicant would use for measurement the wall or comer of the facility closest to the closest wall or comer of other explosive hazard facilities and public areas. When solid rocket motors or motor segments are freestanding, an applicant would measure from the closest motor or motor segment. An acceptable way to demonstrate that minimum distance requirements are met is to draw a circle or arc centered on the closest source of debris or hazard showing that no other explosive hazard facility or public area is within the distance permitted.

Note that Q-D requirements address siting of facilities, not operational control of hazard areas. During actual operations. the existence and size of a hazard area is dependent on the actual amount of explosive material in an explosive hazard facility.

Proposed section 420.35 covers quantity determinations and distance requirements for explosive hazard facilities that support the storage or handling of liquid propellants. In addition to applying to distances between an explosive hazard facility and other explosive hazard facilities and public areas, distance requirements may apply within an explosive hazard facility as well.

Liquid propellants are classified and separated differently than solid propellants. Where solid propellants are classified by class and division, each liquid propellant is assigned to one of three hazard groups and one of two compatibility groups. A hazard group categorizes liquid propellants according to the hazards they cause. Hazard group 1 represents a fire hazard, hazard group 2 represents a more serious fire hazard, and, because a liquid propellant in hazard group 3 can rupture a storage container, it represents a fragmentation hazard. Each liquid propellant also falls into one of two compatibility groups. Liquid propellants are compatible when storing them together does not increase the probability of an accident or, for a given quantity of propellant, the magnitude of the effects of such an accident. Propellants in the same compatibility group do not increase the probability or magnitude of an accident. The two proposed compatibility groups consist of fuels and oxidizers, and are what the NASA and DOD standards label A and C. The FAA proposes to use the same labeling to provide continuity. Proposed group A represents oxidizers such as LO2 and N204, and proposed group C represents fuels such

as RP-1 and LH2. Proposed appendix E provides the hazard and compatibility. groups for current launch vehicle liquid propellants in table E-3.

Explosive equivalency serves as another source of difference between the treatment of solid and liquid propellants. Only if fuels and oxidizers are to be located within certain distances of each other would the separation requirements designed to account for the hazardous consequences of their potential combination apply. That combination is measured in terms of explosive equivalency. Explosive equivalency for liquid propellants is a measure of the blast effects from explosion of a given quantity of fuel and oxidizer mixture expressed in terms of the weight of TNT that would produce the same blast effects when detonated. Fuels should not be located near oxidizers if possible. The significance of the hazard groups and compatibility groups is that if fuels are located far enough from oxidizers, the minimum distance requirements to public areas and other explosive hazard facilities depend only on the quantity and hazard group of the individual liquid propellants. If operational requirements require fuels and oxidizers to be located near each other, that is, at less than the minimum public area and incompatible distances proposed in tables E-4, E-5 and E-6, the explosive equivalency of the incompatible propellants must be calculated and used to determine the distances proposed in table E-7 to other explosive hazard facilities and public areas.

Appendix E contains four distance tables with separation requirements for liquid propellants. Tables E-4, E-5 and E-6 contain separation distances for hazard group 1, 2, and 3. respectively. Table E-7 contains separation distances for when fuels and oxidizers are located less than prescribed distances apart so that explosive equivalency applies. Table E-7 contains distances similar to those for 1.1 solid explosives. This is because the

"explosive equivalency" of a fuel and oxidizer mixture is measured in terms of its equivalent explosive blast effect to TNT. which is a class 1.1 explosive. Table E-7 also prescribes public area and intraline distances.

Tables E-4. E-5. and E-6 have two distances listed for each quantity of liquid propellant by hazard group. The first, a "public area and incompatible" distance, is the minimum distance permitted between a given quantity of liquid propellant and a public area. The distance is also the, same distance by which incompatible propellants must be separated (e.g. the minimum distance between a fuel and an oxidizer) for explosive equivalency and Table E-7 not to apply to the distance calculations. The second. an "intragroup and compatible" distance, is the distance by which propellants in the same hazard group, or propellants in the same compatibility group must be separated (e.g. the minimum distance between two fuels) to avoid adding the quantity of each propellant container being separated in calculating distances. This is simply because if two propellant tanks are far enough apart, they cannot react with one another, even were a mishap to occur. This introduces the third difference between liquid propellant separation requirements and the requirements for solid propellants.

The third area where liquid propellant separation requirements are different than those for solid propellants may be found in calculations of the quantity of liquid propellant that determines the distance relationship with other explosive hazard facilities and public areas. Quantity calculations may depend on distance. As an example, suppose one was determining the minimum distance required between a tank farm having many containers of fuel, and a launch site boundary. If the containers were all close together the applicant would simply take the total amount of fuel, look up the "public

area and incompatible" distance in the table that corresponded to the hazard group of the fuel. and ensure that the distance between the closest wall or comer of the explosive hazard facility and the launch site boundary was at least the distance listed in the table. However. if the containers were separated from each other so that the distance between each container met the minimum "intragroup and compatible"[24] distance in the table, the total quantity of propellant to be used for the "public area" distance determination is only the quantity in each container. Therefore, as discussed below, although quantity determination requirements may be found in proposed section 420.35 (a) and proposed section 420.35 (b) contains distance determination requirements, quantity determinations for liquid propellants may depend on distances between containers.

Like the procedure for solid propellant quantity and distance determinations, an applicant's first step in siting liquid propellants would be to determine the quantity of liquid propellant or, if applicable, the explosive equivalent of the liquid propellant to be located in each explosive hazard facility. An applicant determines this through three steps specified in proposed section 420.35(a). First, proposed section 420.35(a)(1) states that the quantity of propellant in a tank, drum, cylinder, or other container is the net weight in pounds of the propellant in that container. The weight of liquid propellant in associated piping must be included in the determination of quantity to any point where positive means, such as shutoff valves, are provided for interrupting the flow through the pipe, or for interrupting a reaction in the pipe in the event of a mishap.

Next, proposed section 420.35(a)(2) applies when two or more containers of compatible propellants are stored together in an explosive hazard facility. When liquid

[24] The category is called "intragroup and compatible" to cover propellants that are in different hazard groups but are still compatible.

propellants are compatible. the quantity of propellant used to determine the minimum separation distance between the explosive hazard facility and other explosive hazard facilities and public areas shall be the total quantity of liquid propellant in all containers unless either the containers are separated one from the other by the “intragroup and compatible” distance contained in appendix E, table E-4, E-5 or E-6. depending on the hazard group, or the containers are subdivided by intervening barriers to prevent their mixing. In those two cases, the quantity of propellant in the explosive hazard facility requiring the greatest separation distance must be used to determine the minimum separation distance between the explosive hazard facility and all other explosive hazard facilities and public areas.

Finally, proposed section 420.35(a)(3) applies to quantity determinations when two or more containers of incompatible liquid propellants are stored together in an explosive hazard facility. If each container is not separated from every other container by the “public area and incompatible” distances identified in appendix E, tables E-4, E-5 and E-6, an applicant must determine the total quantity of explosives by calculating the explosive equivalent in pounds of the combined liquids, using NASA formulas contained in table E-2, to determine the minimum separation distance between the explosive hazard facility and other explosive hazard facilities and public areas. If the containers are, in fact, to be separated one from the other by the appropriate “incompatible” distance, an applicant would determine the minimum separation distance to another explosive hazard facility or public area using the quantity of propellant within the explosive hazard facility requiring the greatest separation distance. For example, if 50 pounds of hazard group 1 fuel were 31 feet from 150 pounds of hazard group 1 fuel, the minimum required distance

to a public area would be 35 feet. reflecting the public area distance required by the greater quantity of fuel.

Proposed section 420.35(a)(J) requires an applicant to convert liquid propellant quantities from gallons to pounds using conversion factors in table E-3. and the equation provided. The proposed requirement reflects a NASA standard.[25]

After an applicant has determined the quantity of liquid propellant or. if applicable, the explosive equivalent of the liquid propellants to be located in each explosive hazard facility, an applicant must then determine the separation distances between each explosive hazard facility and public areas. Proposed section 420.35(b) specifies the rules by which an applicant determines the separation distances between propellants within explosive hazard facilities, and between explosive hazard facilities and public areas. An applicant would first use table E-3 to determine hazard and compatibility groups. An applicant would then separate propellants from each other and from each public area using at least the distances provided in tables E-4 through E-7. With one exception. as discussed below, tables E-l through E-7 reflect the NASA standard.

Proposed section 420.35(b)(1) would require that an applicant measure minimum separation distances from the container, building, or positive cutoff point in piping which is closest to each public area or explosive hazard facility requiring separation.

Proposed section 420.35(b)(2) would impose a minimum separation distance between compatible propellants. An applicant would measure the separation distance between compatible propellants using the “intragroup and compatible” distance for the propellant quantity and group that requires the greater distance prescribed by tables E-4,

E-S. and E-6. The distance between any two propellants is computed by first determining what the minimum required distance is for each propellant based on the quantity and hazard group of that propellant. The one requiring the greater distance is controlling for the pair.

Proposed section 420.35(b)(3) would apply to the minimum separation distance between incompatible propellants. An applicant would have to measure the separation distance between propellants of different compatibility groups using the "public area and incompatible" distance for the propellant quantity and group that requires the greater distance prescribed by tables E-4, E-5, and E-6, unless the propellants of different compatibility groups are subdivided by intervening barriers to prevent their mixing. If intervening barriers are to be present, the minimum separation distance shall then be the "intragroup and compatible" distance for the propellant quantity and group that requires the greater distance prescribed by tables E-4, E-5, and E-6.

Proposed section 420.35(b)(4) would apply to the separation of liquid propellants from public areas. An applicant shall separate these propellants from public areas using no less than the "public area" distance prescribed by tables E-4, E-5, and E-6.

Proposed section 420.35(b)(5) would apply to propellants where explosive equivalents apply prescribed by subparagraph (a)(3). An applicant shall separate each explosive hazard facility that will contain propellants where explosive equivalents apply from all other explosive hazard facilities that are under the control of the same customer using at least the intraline distance in table E-7. The minimum separation distance from public areas is the public area distance in table E-7. Table E-7 is a revised form of the NASA standard.

---

[25] NASA Standard at 7-7.

Proposed section 420.37 would specify the rules to be used when solid and liquid propellants are located together. such as at launch pads and test stands. For applicants proposing an explosive hazard facility where solid and liquid propellants are to be located together. section 420.37 provides three steps that an applicant should use to determine the minimum separation distances between the explosive hazard facility and other explosive hazard facilities and public areas. An applicant would first determine the minimum separation distances between, the explosive hazard facility and other explosive hazard facilities and public areas required for the solid propellants alone, in accordance with proposed section 420.33. An applicant would then determine the minimum separation distances between the explosive hazard facility and other explosive hazard facilities and public areas required for the liquid propellants alone, in accordance with section 420.35. If explosive equivalents apply, an applicant would determine the minimum separation distances between the explosive hazard facility and other explosive hazard facilities and public areas required for the liquid propellants using appendix E, table E-7, in accordance with section 420.35. An applicant would then apply the greater of the distances determined by the liquid propellant alone or the solid propellant alone.

Subpart C contains license term and conditions. Section 420.41 would specify the authority granted to a launch site operator by a license and the licensee's obligation to comply with representations contained in the license application as well as the FAA's license terms and conditions. The provision limits a licensee's authority to the launch points on the launch site and to the types of launch vehicles used to demonstrate the safety of the launch site location, and, for orbital launch vehicles, to vehicles no larger than the class analyzed. The provision would also clarify the licensee's obligation to

comply with any other laws or regulations applicable to its licensed activities and identities certain rights that are not conveyed by a launch site operator license.

Section 420.43 would specify the duration of a license to operate a launch site, the grounds for shortening the term. and that a license may be renewed.

Section 420.45 would provide the procedures that an applicant must follow to obtain FAA approval for the transfer of an existing license to operate a launch site.

Section 420.47 would specify the procedures that the FAA would follow to modify a license through a license order or written approval, and the procedures that a launch site operator licensee must follow to obtain an FAA license modification. A licensee must obtain a license modification if the licensee proposes to operate the launch site in a manner not authorized by its license. This means, among other things, that if a representation in the license application regarding an issue material to public safety is no longer accurate or does not describe the licensee's operation or intended operation of the site, a licensee must obtain a license modification. This is because the representations a licensee makes in its application become part of the terms and conditions of its license.

A licensee must obtain FAA approval prior to modifying its operations. For example, a licensee whose application stated that it would prevent unauthorized access to its launch site through the use of security personnel might decide, in the course of its operation, that physical barriers might better serve to accomplish this goal. The FAA considered that, on the one hand, the ability to immediately institute a change might best control public access because if a licensee has to wait for its license to be modified prior to instituting a change, needed safety improvements might be unnecessarily delayed. On the other hand, the FAA's mandate requires that it first ascertain whether the proposed

change is indeed acceptable. Accordingly, the FAA decided that it must first be advised of a proposed change and must approve its implementation. In the event of special circumstance and where safety warrants. the FAA will work with a licensee to accommodate any timing problems.

Proposed section 420.47 also specifies the procedures for a licensee to obtain and the FAA to issue a license modification. The FAA could modify a license using a written approval rather than a license order in cases where the change addresses an activity or condition that was represented in the license application but not spelled out in a license order.

Section 420.49 would impose an obligation on a launch site operator licensee, its customers, and its contractors to cooperate with the FAA in compliance monitoring of licensed activities. This requirement recognizes an FAA compliance monitor's need to observe operations conducted by all parties at the site and to have access to records and personnel if the FAA is to be assured that public safety is being protected.

Subpart D contains the responsibilities of a licensee. Section 420.5 1 would describe a licensee's obligation to operate its launch site in accordance with the representations in its license application, 49 U.S.C. Subtitle IX, ch. 701 and the FAA's regulations.

Section 420.53 would require a launch site operator licensee to control public access to the launch site and to protect the public present at the launch site. The proposed regulation seeks to protect the public from the consequences of flight and pre-flight activities by separating the public from hazardous launch procedures. The public could also be at risk if allowed to enter the launch site or move about without adequate

safeguards. This provision would require the licensee to prevent the public from gaining unauthorized access to the launch site. The applicant would be given broad discretion in selecting the method for controlling access. The provision would also hold the licensee responsible for informing members of the public of safety precautions before entry and for warning of emergencies on-site. A licensee would also be responsible for escorting the public between hazard areas not otherwise controlled by a launch operator at the launch site. and employing warning signals or alarms to notify persons on the launch site of any emergency.

Section 420.55 would require a licensee to develop and implement procedures to coordinate operations carried out by launch site customers, including launch operators, and their contractors. This requirement is necessary to ensure that the operations of one launch site customer do not interact with the operations of another customer to create a public safety hazard at the launch site or beyond. For example, the testing of equipment using radio frequency transmissions could trigger ordnance used by someone elsewhere on the site. if the two launch preparation activities are not coordinated or warnings issued. Likewise, hazardous operations by one customer with the potential to reach another customer must be coordinated by the launch site operator. A launch site licensee would be required to ensure that all customers at the site are informed of procedures and adhere to scheduling requirements before commencing operations at the launch site.

Section 420.57 would establish notification requirements for a licensee. The licensee would be responsible for notifying customers of any limitations on use of the site. This provision would ensure that customer activities are compatible with other activities at the launch site. It would also ensure that limitations on the use of facilities

provided to customers by a launch site operator are communicated to the customer. The licensee will be responsible for possessing agreements with the Coast Guard to arrange for issuance of Notices to Mariners during launches and with the regional FAA office for Notices to Airmen and closure of air routes. In addition, the licensee will notify local officials and landowners adjacent to the launch site of the flight schedule. This provision places an on-going responsibility on the site operator licensee for establishing notification procedures. rather than on the, numerous launch licensees whose involvement with the launch site may be more sporadic and temporary. The proposed requirement would, however. leave open the option of a launch licensee implementing the procedures established by the launch site operator.

Section 420.59 would require a licensee to develop and implement a launch site accident investigation plan containing procedures for reporting, investigating and responding to a launch site accident. The provision would extend reporting, investigation and response procedures currently applicable to launch related accidents and incidents to accidents occurring during ground activities at a launch site. The proposed rule allows launch site operators to satisfy the requirements of section 420.59 by using accident investigation procedures developed in accordance with the requirements of the U.S. Occupational Safety and Health Administration (OSHA) at 29 CFR 1910.119 and 120, and the U.S. Environmental Protection Agency (EPA) at 40 CFR part 68, to the extent that the procedures include the elements provided in section 420.59.[26] The FAA wishes

[26] The EPA's requirements in 40 CFR 68 apply to "incidents which resulted in, or could reasonably have resulted in a catastrophic release." 40 CFR 68.60(a). OSHA's requirements in 29 CFR 1910.119 are similar, applying to "each incident which resulted in, or could reasonably have resulted in a catastrophic release of a highly hazardous chemical in the workplace." 29 CFR 1910.119(m)(l).

to ease the regulatory burden here and in other parts of the proposed rules where other federal regulatory agencies impose requirements on launch site operators.

OSHA's standard at 29 CFR 1910.119 includes provisions for investigating incidents and emergency response. See 29 CFR 1910.119(m) and (n). In addition. 29 CFR 1910.130. hazardous waste operations and emergency response (HAZWOPER), provides for emergency response planning for operations involving hazardous materials, including those listed by the Department of Transportation under 49 CFR 172.101.[27] Launch operators and launch site operators in compliance with these requirements will be taking steps to protect the public as well as their workers.

EPA's requirements at 40 CFR 68 also include standards for incident investigation and emergency response. See 40 CFR 68.60, 68.8 1, 68.90, and 68.180. For both the OSHA and EPA requirements, compliance with 42 USC 11003, Emergency Planning and Community Right-to-Know, satisfies many of the emergency response provisions.

The FAA is interested in the public's view of proposed section 420.59, particularly the extent to which other regulatory agency requirements such as OSHA and EPA help to ensure launch site operators respond to and investigate launch site accidents.

Section 420.61 would provide the requirements for launch site operator retention of records, data, and other material needed to verify that launch site operator operations are conducted in accordance with representations contained in the license, and for record production in the event of launch site accident investigation, or compliance monitoring.

[27] Hazardous materials in AST regulations, section 40 1.5, are defined as hazardous materials as defined in 49 CFR Sec. 172.101.

Section 420.63 would provide responsibilities of a launch site operator regarding explosives. Section 420.63 (a) would require a launch site operator to ensure that the configuration of the launch site is in accordance with the licensee's explosive site plan, and that its explosive site plan is in compliance with the requirements in §§ 420.3 1 - 420.37.

Section 420.63 (b) would require a launch site operator to ensure that the public is not exposed to hazards due to the initiation of explosives by lightning. Unless an explosive hazard facility has a lightning warning system to permit termination of operations and withdrawal of the public to public area distance prior to the incidence of an electrical storm, or the explosive hazard facility is to contain explosives that cannot be initiated by lightning, it must have a lightning protection system to ensure explosives are not initiated by lightning. A lightning protection system shall include an air terminal to intentionally attract a lightning strike, a low impedance path--called a down conductor--connecting an air terminal to an earth electrode system, and an earth electrode system to dissipate the current from a lightning strike to ground.

Because no lightning protection system is necessary if a launch site operator has a lightning warning system to permit termination of operations and withdrawal of the public to public area distance prior to the incidence of an electrical storm, proposed section 420.63 does not explicitly protect the public from the inadvertent flight of a solid rocket motor. The FAA is interested in public views on this point.

A lightning protection system shall also include measures for bonding and surge protection. For bonding, all metallic bodies shall be bonded to ensure that voltage potentials due to lightning are equal everywhere in the explosive hazard facility. Fences

within six feet of the lightning protection system shall have bonds across gates and other discontinuations and shall be bonded to the lightning protection system. Railroad tracks that run within six feet of the lightning protection system shall be bonded to the lightning protection system. For surge protection. a lightning protection system shall include surge protection for a!! metallic power, communication. and instrumentation lines coming into an explosive hazard facility to reduce transient voltages due to lightning to a harmless level.

Lightning protection systems shall be visually inspected semiannually and shall be tested once each year for electrical continuity and adequacy of grounding. A record of results obtained from the tests, including action taken to correct deficiencies noted, must be maintained at the explosive hazard facility.

Section 420.63 (c) would require a launch site operator to ensure that electric power lines on the launch site meet the distance requirements provided. A full discussion of explosive hazard mitigation measures is provided in the general preamble above.

Appendix A

Of the two methods the FAA proposes for allowing an applicant to demonstrate the existence of a guided launch vehicle flight corridor that satisfies the FAA's risk criteria, appendix A typically offers the more conservative approach in that it produces a larger area, as well as the more simple of the options available for guided orbital and suborbital launch vehicles. In order to achieve the simplicity this approach offers, the FAA based certain decisions regarding the methodology on a series of what it intends as conservative assumptions and on hazard areas previously developed by the federal launch ranges for the guided launch vehicles listed in table 1 of section 420.2 1.

The greater simplicity of the approach derives from the fact that. unlike the method of appendix B. an applicant need obtain no meteorological data and need not plot the trajectory of a particular launch vehicle. Instead. recognizing that a typical flight corridor consists of a series of fans of decreasing angle extending out from a launch point. the FAA proposes. with certain modifications. to employ a variation on that typical corridor for its proposed appendix A analysis.

The FAA's proposed appendix A flight corridor estimation contains a number of elements. each of which an applicant must define for each of its proposed launch points. An appendix A flight corridor consists of a circular area around a selected launch point, an overflight exclusion zone, a launch area and a downrange area. A flight corridor for a guided orbital launch vehicle ends 5,000 nautical miles from the launch point, and, for a guided suborbital launch vehicle, the flight corridor ends with the impact dispersion area of the launch vehicle's final stage.

Once an applicant has produced an appendix A flight corridor, the applicant must ascertain whether the flight corridor contains population, and, if so, whether the use of the corridor would present unacceptable risk to that population. If no members of the public reside within the corridor, the FAA would approve the proposed location of the site.'* If the flight corridor is populated, the FAA proposes to require an applicant to perform a risk analysis as set forth in appendix C. If the proposed corridor satisfies the FAA's risk criteria, the FAA will approve the location of the site. If, however, the proposed corridor fails to satisfy the FAA's risk criteria, an applicant has certain options. The applicant may attempt another appendix A flight corridor by selecting a different

flight azimuth or by selecting a different launch point at the proposed launch site. or by selecting a different launch vehicle type or class. Or. the applicant may, using the more accurate but more complicated calculations of appendix B. narrow its flight corridor and determine whether that flight corridor satisfies the FAA's risk criteria.

To create a hypothetical flight corridor under proposed appendix A an applicant must first determine from where on the launch site a guided launch vehicle would take flight. That position is defined as a launch point. An applicant must determine the geodetic latitude and longitude of each launch point that it proposes to offer for launch, and select a flight azimuth for each launch point. An applicant should know whether it plans to offer the site for the launch of guided orbital or sub-orbital launch vehicles. If planning for the launch of guided orbital launch vehicles, the applicant must decide what launch vehicle class, as described by payload weight in proposed section 420.2 1, table 1, best represents the largest launch vehicle class the launch site would support.

Once an applicant has made the necessary decisions regarding location and vehicle class, the next step in creating an appendix A flight corridor is to look up the maximum distance (D_{max}) that debris is expected to travel from a launch point if a worst-case launch vehicle failure were to occur and flight termination action destroyed the launch vehicle at 10 seconds into flight. D_{max} serves as a radius that defines a circular area around the launch point. The FAA has estimated, on the basis of federal launch range experience, the D_{max} for a guided suborbital launch vehicle and for each guided orbital launch vehicle class and provided the results that an applicant should employ in table A- 1, appendix A.

[28] An applicant must still obtain written agreements with the FAA regional office having jurisdiction over the airspace where launches will take place and, if appropriate, with the U.S. Coast Guard regarding

The circular area. defined by D_{max}. is part of an overtlight exclusion zone. An overflight exclusion zone in an appendix A flight corridor consists of a rectangular area of the length prescribed by table A-2, capped up-range by a semi-circle with radius D_{max} centered on the launch point. Its downrange boundary is defined by an identical semi-circular arc with a radius D_{max} centered on the endpoint prescribed by table A-2. The cross-range boundaries consist of two lines parallel to and to either side of the flight azimuth. Each line is tangent, to the uprange and downrange D_{max} circles as shown in appendix A, figure A-l.

An appendix A flight corridor also contains a launch area. The launch area extends from the uprange boundary, which is coextensive with the circle created by the radius D_{max}, to a line drawn perpendicular to the flight azimuth one hundred nautical miles down range of the launch point. The launch area's cross-range boundaries are a function of the lengths of two lines perpendicular to the flight azimuth: one drawn ten nautical miles down range from the launch point and the other line drawn one hundred nautical miles down range from the launch point. Table A-3 provides the lengths of the line segments.

Adjacent to the launch area is the downrange area. For purposes of appendix A, a corridor's downrange area extends from the one hundred nautical miles line to a line, perpendicular to the flight azimuth, that is 5,000 nautical miles downrange from the launch point for the guided orbital launch vehicle classes, and to an impact dispersion area for a guided suborbital launch vehicle corridor. The down range area's cross-range boundaries connect the prescribed endpoints of the perpendicular lines at one hundred

---

procedures for coordinating launches from the launch site.

nautical miles and 5.000 nautical miles. Table A-3 provides the lengths of the line segments.

An applicant must determine whether the public resides within this flight corridor. If no populated areas exist. an applicant may submit its analysis for the FAA's launch site location review. If there is population located within the flight corridor. the applicant must calculate the risk to the public following the criteria provided in appendix C. The expected casualty (E,) result for the flight corridor must not exceed 30 x 10^{-6} for the applicant to satisfy the proposed location requirements.

Map Requirements and Plotting Methods

To describe a flight corridor and any populated areas within that corridor, an applicant must observe data and methodology requirements for mapping a flight corridor and analyzing populations. These requirements apply to all appendices.

The FAA proposes to require certain geographical data for use in describing flight corridors for each appendix. The geographical data must include the latitude and longitude of each proposed launch point at a launch site, and all populated areas in a flight corridor. The accuracy requirement for the launch area portion of the analyses calls for map scales of no smaller than 1:250,000 inches per inch. The actual map scale will depend on the smallest census block group size in a launch area. The FAA bases its proposed scale requirement on average range rates in the launch area, because range rates have a direct impact on dwell times over populated areas. While in the launch area of a flight corridor, the instantaneous impact point (IIP) ground trace would tend to linger over any populated areas, which increases the E_c for an individual populated area. The

map scale required by the FAA is large enough to allow an applicant to determine the dwell time and size for each applicable populated area.

Using a similar approach, the FAA proposes to establish an accuracy requirement for the downrange area of a flight corridor. A map scale may be no smaller than 1:20,000,000 inches per inch. The scale would be smaller than that required for the launch area because the dwell times over downrange populated areas is small and the map scale must only be large enough to allow an applicant to determine the dwell time and the size of each populated area downrange. Maps satisfying these accuracy requirements are readily available. For example, civil aeronautical charts are published and distributed by the U.S. Department of Commerce, National Oceanic and Atmospheric Administration (NOAA), and are also published by the Defense Mapping Agency and distributed by NOAA.

Besides scale, the FAA has proposed requirements for projections, depending on the plotting method used. Proposed appendices A, B, C and D would require an applicant to use cylindrical, conic, and plane map projections. The FM proposes these map projections for the analyses because they produce only small error with straight line measurements. Maps may be produced using several different map projections depending on the map scale, geographic region being depicted, and the application. A map projection, according to the U.S. Geological Survey[29], is a device for producing all or part of a round body on a flat sheet. All map projections have inherent distortions. The distortions are virtually unavoidable and are directly related to the techniques for displaying latitude and longitude lines on a flat surface area. Therefore, many maps are developed for specific applications requiring that some map characteristics be shown

more accurately' at the expense of others. The flight corridor methods are primarily sensitive to azimuthal direction and geodetic length of the flight corridor line segments. Therefore, it is important to use map projections that preserve scale and direction accuracy.. Cylindrical. conic, and plane map projections have been reviewed by the FAA and are the most appropriate types for the launch site application analyses.

The regular cylindrical projections consist of meridians, which are equidistant parallel straight lines, crossed at right angles by straight parallel lines of latitude, generally not equidistant. Geometrically, cylindrical projections can be partially developed by unrolling a cylinder which has been wrapped around a globe representing the Earth, with the inside of the cylinder touching at the equator, and on which meridians have been projected from the center of the globe. When the cylinder is wrapped around the globe in a different direction, so that it is no longer tangent along the equator, an oblique or transverse projection results, and neither the meridians nor the parallels will generally be straight lines.

Normal conic projections are distinguished by the use of arcs of concentric circles for parallels of latitude and equally spaced straight radii of these circles for meridians. The angles between the meridians on the map are smaller than the actual differences in longitude. The circular arcs may or may not be equally spaced, depending on the projection. The name "conic" originated from the fact that the more elementary conic projections may be derived by placing a cone on the top of a globe representing the Earth. the apex or tip in line with the axis of the globe, and the sides of the cone touching or tangent to the globe along a specified "standard" latitude which is true to scale and without distortion. Meridians are drawn on the cone from the apex to the points at which

[29] "Map Projections used by the U.S. Geological Survey," U.S. Geological Survey Bulletin 1532, 1982.

the corresponding meridians on the globe cross the standard parallel. Other parallels are then drawn as arcs centered on the apex in a manner depending on the projection. If the cone is cut along one meridian and unrolled, a conic projection results.

The azimuthal projections are formed onto a plane which is usually tangent to the globe at either pole. the equator, or any intermediate point. These variations are called the polar. equatorial (or meridian or meridional), and oblique (or horizon) aspects. respectively. Some azimuthals are true perspective projections. Azimuthal projections are characterized by the fact that the direction, or azimuth, from the center of the projection to every other point on the map is shown correctly. The simplest forms of the azimuthal projections are the polar aspects, in which all meridians are shown as straight lines radiating at their true angles from the center, while parallels of latitude are circles concentric about the pole. Most azimuthal maps do not have standard parallels or standard meridians. Each map has only one standard point. the center. Thus, the azimuthals are suitable for minimizing distortion in a somewhat circular region such as Antarctica. but not for an area with predominant length in one direction.

Scale requirements, geographic location of the launch site, and plotting method are the main considerations for choosing a map projection. Of these considerations. the plotting method selected for development and depiction of the flight corridor line segments is the most important. Three plotting methods are provided in appendix A.

The “mechanical method” is the least complex, least costly, but also the least accurate of the methods suggested here. Selecting an appropriate map scale and using a map projection that minimizes inherent scale and direction distortions can minimize

coordinate plotting errors. The “Lambert-Conformal” conic projection is acceptable because it has characteristics that preserve angles and scales from any point on the map.‘”

The “semi-automated method” provides more accurate techniques for determining the endpoint coordinates of each flight corridor line segment. Errors associated with measuring devices and the mapping medium tend to be the same as those associated with the mechanical method. Engineering judgment and some map errors are reduced through the use of range and bearing equations. These equations also allow the applicant to choose from a wider variety of map projections. The “Mercator” and “Oblique Mercator” are adequate cylindrical projections. “Lambert-Conformal” and “Albers Equal-Area” are adequate conic projections. The "Lambert Azimuthal Equal-Area” and “Azimuthal Equidistant” are adequate plane projections. An applicant may use other maps in support of its application, but the applicant would be required to demonstrate an equivalent level of accuracy over the required distances, and would have to describe the consequences of any mapping errors associated with the proposed map projection.

Each of these projections possesses a number of attributes, which make some better suited for some parts of the globe than others. Typically, most projections preserve scale and direction when measured from a point of tangency or along a standard parallel or meridian. A Mercator projection is cylindrical and conformal, that is, all angles are presented correctly, and for small areas, true shape of features is maintained. In a Mercator projection, meridians are equally spaced straight lines and parallels are unequally spaced straight lines, closest near the equator, cutting meridians at right angles.

[30] The projections suggested below for the semi-automated method are accurate in scale and direction only from a point of tangency or the standard parallels. These limitations would produce additional errors when using the mechanical method.

Scale is true along the equator. or along two parallels equidistant from the equator. The Mercator projection may produce great distortion of area in polar regions.

The Oblique Mercator is cylindrical (oblique) and conformal. It contains two meridians. 180° apart. which are straight lines. Other meridians and parallels are complex curves. Scale on the spherical form is true along a chosen central line, a great circle at an oblique angle, or along two straight lines parallel to central line. The scale on the ellipsoidal form is similar. but varies slightly from this pattern. Scale becomes infinite 90° from the central line.

The Lambert Conformal is conic and conformal. Its parallels are unequally spaced arcs of concentric circles, more closely spaced near the center of the map. Meridians are equally spaced radii of the same circles, and consequently cut parallels at right angles. Scale is true along two standard parallels normally, or along just one. A pole in the same hemisphere as standard parallels is a point. The other pole is at infinity.

The Albers Equal-Area is conic. Parallels are unequally spaced arcs of concentric circles, more closely spaced at the north and south edges of the map. Meridians are equally spaced radii of the same circles, cutting parallels at right angles. There is no distortion in scale or shape along two standard parallels normally, or along just one. Poles are arcs of circles.

The Lambert Azimuthal Equal-Area is azimuthal. All meridians in the polar aspect, the central meridian in other aspects, and the equator in the equatorial aspect are straight lines. The outer meridian of the hemisphere in the equatorial aspect, for the sphere. and the parallels in the polar aspect for sphere or ellipsoid are circles. All other

msridians and parallels are complex curves. Scale decreases radially as the distance increases from the center. the only point without distortion.

The Azimuthal Equidistant is azimuthal. Distances measured from the center are true. Distance not measure along radii from the center are not correct. The center of projection is the only point without distortion. Directions from the center are true except on some oblique and equatorial ellipsoidal forms. All meridians on the polar aspect, the central meridian on the other aspects, and the equator on the equatorial aspect are straight lines. Parallels on the polar projection are circles spaced at true intervals equidistant for the sphere. The outer meridian of the hemisphere on the equatorial aspect for the sphere is a circle. All other meridians and parallels are complex curves.

All of these map projections, with the exception of the “Lambert-Conformal” conic, preserve scale and direction when measured along a standard parallel or meridian. Because range and bearing computations are relative to a particular ellipsoid of revolution-a geoid, not the projection of the geoid, the computed latitude and longitude placement will be correct for any projection assuming the map datum and the range and bearing datum are the same.

The FM will not accept straight lines of long distances that result in significant distortions of the flight corridor. Attempting to draw straight lines for distances greater than 7.5 times the map scale on map scales greater than or equal to 1: 1 ,OOO,OOO will result in unacceptable errors. The distance factor of 7.5 was determined by plotting several hundred trajectory IIP points and finding equi-distant straight line segments that adequately represent the trajectory curve over a 5,000 nm range.

Appendix A provides an applicant with the equations the FAA proposes to require to perform range and bearing computations for the purpose of plotting a flight corridor on a map. The range and bearing from a launch point are used to determine the latitude and longitude coordinates of a point on the flight corridor. Range and bearing equations are standard geodesic computations which can be found in most geodesy text books. A geodesic is a curve describing the minimum length between two points on the surface of an ellipsoid such as the WGS-84 ellipsoid discussed below. The range and bearing computations are sometimes referred to as great circle math routines. Sodano's direct geodetic method is proposed here. The algorithm was developed in 1963 by Emanuel M. Sodano for the U.S. Army. The computations provide accuracy to less than a foot for ranges up to 6,000 nm and less than 1/100th of a second (0.000002778 degrees) for all azimuth angles."

An applicant may create line segments to describe a flight corridor by using range and bearings from the launch point along various azimuths. Appendix A provides equations to calculate geodetic latitude (+N) and longitude (+E) given the launch point geodetic latitude (+N), longitude (+E), range (nm), and bearing (degrees, positive clockwise from North). The same equations may also be used to calculate an impact dispersion area by substituting a final stage impact point for the launch point. Appendix A also provides equations to calculate the distance of a geodesic between two points.

[31] The FAA developed a software tool to perform the appendix A calculations for guided orbital launch vehicles. This software tool has been developed in the FORTRAN computer language using Microsoft's Fortran Powerstation. All of the assumptions and equations explained here and contained in appendix A are implemented in the program. The applicant must provide the geodetic latitude, longitude, launch azimuth, and D_{max} from table A-l as input to the program. The software outputs an ASCII text tile of geodetic latitudes and longitudes that describe the flight corridor boundary. The FORTRAN code listing and example input/output may be obtained from the FAA.

An alternative to range and bearing computations is to use geographic information system (GIS) software with global mapping data. GIS software is an effective tool for constructing and evaluating a flight corridor. and has the advantage of allowing an applicant to create maps of varying scales in the launch and downrange areas. Commercially available GIS products are acceptable to the FAA for use in Appendices A. B. C and D if they meet the map and plotting method requirements in paragraph (b) of appendix A. An applicant should note. however, that maps of different scales in GIS software may not match each other. For instance, the coastline of Florida on a U.S. map may not match the coastline on a world map. Applicants shall resolve such contradictions by referring to more accurate maps such as NOAA maps.

Once an applicant has selected a map for displaying a flight corridor's launch area. the line segment lengths may be scaled to the chosen map. Map scale units are actual distance units measured along the Earth's surface per unit of map distance. Most map scale units are given in terms of inches per inch (in/in). An applicant converts appendix A flight corridor line segment distances to the map scale distance by dividing the launch area flight corridor line segment length (inches) by the map scale (in/in). If, for example. an applicant selected a map scale of 250,000 in/in and the line segment for the launch area flight corridor was 1677008 inches, the equivalent scaled length of the line segment for constructing an appendix A launch area is (1677008/250,000) = 6.7 inches of map distance. An applicant would then plot the line segment on the map for display purposes using the scaled line segment length of 6.7 inches. If an applicant were to choose a map with scale units other than inches per inch, the FAA would require a description of the conversion algorithm to inches per inch and sample

computations. Also note that the FAA proposes to accept straight lines for distances less than or equal to 7.5 times the map scale on map scales greater than or equal to 1 : 1 .OOO.OOO inches per inch: or straight lines representing 100 nm or less on map scales less than 1: 1 .OOO.OOO in/in.

Weight Classes for Guided Orbital Launch Vehicles

Proposed appendix A distinguishes between the guided orbital launch vehicles represented in the appendix on the basis of weight class. The FAA does not propose to distinguish among guided suborbital launch vehicles on the basis of weight class for purposes of appendix A. For guided orbital launch vehicles, the FAA proposes to create four separate weight classes. These are used to determine the size of the debris dispersion radius around a launch point, and the size of an appendix A flight corridor. The FAA selected the four launch vehicle classes based on the size and characteristics of launch vehicles that currently exist in the U.S. commercial inventory and that should approximate any proposed new launch vehicle as well. An applicant planning to support the launch of guided orbital launch vehicles should choose the largest launch vehicle class anticipated for launch from the chosen launch point. This maximizes the area of the flight corridor. Also, selection of the largest class anticipated lessens the possibility of having to obtain a license modification to accommodate a larger customer than an application may have originally encompassed.

The FAA proposes to rely on a 100-m-n orbit as the standard for inter-class launch vehicle comparison purposes. It is a standard reference orbit used by launch vehicle manufacturers for descriptive purposes and allows the uniform comparison of launch vehicle throw weight capability. The FAA obtained the payload weights for the 28° and

90” orbital inclinations from the “International Reference Guide to Space Launch Systems.” S. J. Isakowitz. 2d ed. (1995). They represent capabilities from CCAS and VAFB, respectively.

D_{max} Circle

A radius. maximum distance (D_{max}), is employed to define a circular area about a launch point. The circular area indicates the limits for both flight control and explosive containment following a worst-case launch vehicle failure and flight termination system activation at 10 seconds into flight. The worst-case failure represents a failure response, immediately following first motion, which causes the launch vehicle to fly in the uprange direction on a trajectory that maximizes the impact range. The ten second flight time represents a conservative estimate of the earliest elapsed time after launch that a flight safety officer would be able to detect the malfunction, initiate flight termination action, and actuate the flight termination system on the launch vehicle. The radius is the estimated D_{max} from the launch point that inert debris is expected to travel and beyond which the overpressure from explosive debris is not expected to exceed 0.5 pounds per square inch (psi). D_{max} accounts for the public risk posed by the greater of the wind-induced impact distance of a hazardous piece of inert debris, or the sum of the wind-induced impact distance of an explosive piece of debris and the debris’ 0.5 psi overpressure radius from the explosion. The values for D_{max} in table A- 1, appendix A, were derived from guided suborbital launch vehicles and guided orbital launch vehicles of the classes identified in table 1, section 420.2 1.

Overflight Exclusion Zone

Table A-2 and figure A-1 define an overflight exclusion zone. Because of the risks the early stages of flight create, the FAA proposes to require an applicant to demonstrate that the public will not be present in this area during a launch. An overflight exclusion zone is an area in close proximity to a launch point where the mission risk is greater than an E_c of 30×10^{-6} if one member of the public is present in the open. The FAA derived the data for table A-2 using high fidelity risk assessment computer models to estimate the E_c for the different vehicle classes in table 1, section 420.21.

Early in the flight phase launch vehicles have large explosive potential, a low IIP range rate, and an historically higher probability of failure relative to the rest of pre-orbital flight. The relatively simple risk estimation analysis defined in appendix C does not adequately model the true risk during this stage of flight, and does not serve as the basis for determining that the overflight exclusion zone represents an area where the FAA's risk threshold is not satisfied. Instead, the FAA derived the overflight exclusion zone using a high fidelity risk assessment computer program in use by the national ranges. The program is a launch area risk analysis program called DAMP (facility DAMage and Personal injury). DAMP relies on information about a launch vehicle, its trajectory and failure responses, and facilities and populations in the launch area to estimate hit probabilities and casualty expectation. The hazards analyzed by DAMP include impacting inert debris, and blast over-pressures and debris projected from impact explosions.

For the purpose of the FAA's site location assessment. the proposed overflight exclusion zone downrange distances (D_{OEZ}) in table A-2 were derived by computing the downrange drag impact point distance for a ballistic coefficient of 3 lbs/ft^2 at the first major staging event time for each of the expendable launch vehicle classes in table 1, section 420.2 1. The effective casualty area used in the analysis was the average effective casualty area for the period of flight up to the first major staging event time. See table C-3. The DAMP risk assessment results showed that E_c values exceeded 30x 10^{-6} for the time up to the first major staging event for each of the launch vehicle classes in table 1, section 420.2 1.

Risk assessments were also conducted for the time of flight immediately after the first major staging event. The results showed a significant decrease in the E_c estimates. and those estimates were within the E_c criteria of 30x 1 0^{-6}. The decrease results from a combination of decreasing dwell times and a significant reduction in the size of an effective casualty area following a major staging event.

The FAA compared the results obtained using the high fidelity risk models to the estimated casualty expectancy calculated using the risk analysis method from appendix C. The results from the appendix C method also show unacceptable risk inside the overflight exclusion zone, as shown in tables "3" and "4" below. An appendix A flight corridor was applied to an appendix C risk analysis and the following variables were input as constants for the guided launch vehicle classes:

$P_f = 0.10$

C = 643 seconds

R-dot = .91 nm/s (from table C-2)

$N_k = 0.5$ persons

As described in appendix C, when a populated area is split by a trajectory ground trace, each part of the populated area is evaluated separately and the E_c results of each part are summed to estimate the total E_c for the whole populated area. Hence, for this comparison a value of $N_k = 0.5$ was used in each of the OEZ sections so the total E_c after summation would represent the risk for one person. Tables 3 and 4 show that the E_c inside the OEZ does not meet FAA criteria and does meet those criteria outside the OEZ.

Table 3
Prior to First Major Staging Event

Class	X1(**mi**)	X2(nm)	Y1(nm)	Y2(nm)	Sigma (nm)	Ac(nm2)	Ak(nm2)	Pi	E_c
Small	0.00	3.70	0.00	1.20	1.62	0.32	6.70	1.71E-04	40.9E-06
Medium	0.00	4.58	0.00	1.53	1.82	0.40	8.98	2.35E-04	52.3E-06
Med-Lrg	0.00	9.67	0.00	1.83	3.56	0.54	12.23	3.25E-04	71.7E-06
Large	0.00	14.76	0.00	2.14	5.31	1.46	34.66	3.95E-04	83.2E-06
		Med-Lrg values for tables "3" and "4" were interpolated from the bounding classes.							
		Ac = average value up to first major staging event.							

Table 4
After First Major Staging Event

Class	X1(mi)	X2(nm)	Y1(nm)	Y2(nm)	Sigma (nm)	Ac(nm2)	Ak(nm2)	Pi	E_c
Small	0.00	3.70	0.00	1.20	1.62	0.0982	6.70	1.71E-04	12.5E-06
Medium	0.00	4.58	0.00	1.53	1.82	0.0017	8.98	2.35E-04	22.2E-06
Med-Lrg	0.00	9.67	0.00	1.83	3.56	0.083 1	12.23	3.25E-04	11 .OE-06
Large	0.00	14.76	0.00	2.14	5.31	0.4682	34.66	3.95E-04	26.7E-06
		Med-Lrg values for tables “3” and “4” were interpolated from the bounding classes.							
		AC = value after first major staging event.							

The FAA believes that it is efficient to address keeping an overflight exclusion zone clear of the public through a license to operate a launch site so that the licensee better able to address the issue does so. Moreover, although the FAA is willing to license the operation of a launch site from which a limited number or kind of launches may take place, the FAA does not want to license the operation of a launch site from which launch may never occur. The FAA proposes, therefore, to require that an applicant demonstrate either that the overflight exclusion zone is unpopulated, that there are times when no one is present. or that the public can be excluded from this area during launch. Although a determination of this nature encompasses issues that will be addressed in a launch license, a launch site cannot support safe launches unless overflight of the highest risk area in close proximity to a launch point takes place without the public present. The FAA considered as an alternative permitting a prospective launch site operator to show that it would be able to clear resident population for one launch. For example, a prospective launch site operator might have a potential customer who has made arrangements for evacuation for a single launch. The FAA, however, wants to be assured

that an OEZ would be clear for any launch that takes place from that site. and would, accordingly. require that. if the public does reside in an OEZ, or have other means of access to the OEZ. an applicant show that it has made arrangements for their absence during a launch."

An applicant must display an overflight exclusion zone on maps using the requirements described in paragraph (b) of appendix A.

Launch Area

As noted at the beginning of this discussion, the FAA proposes to employ a series of fans as the shape of the foundation of its appendix A flight corridor. The FAA proposes the flight corridor fans to account for the turning capabilities and wind dispersed debris of a guided launch vehicle. The launch area fans have been divided into two regions, of 60 and 30 degrees, representing the malfunction turn capability of the launch vehicle relative to its velocity in the downrange direction. Each region is represented by the estimated maximum turning capability over a ground-range interval. These angles are the FAA's estimates for the maximum angles that the launch vehicle velocity vector may turn within a five second time period. The initial fan area is described by a 60" half angle extending ten nautical miles downrange from a launch point. The ten nautical mile threshold represents the FAA's estimate of where a vehicle's maximum turning rate capability is reduced to approximately 30 degrees due to increasing velocity in the downrange direction. The FAA obtained these estimates on the basis of a Delta II launch vehicle trajectory, and by employing an annualized wind speed

[32] T'he FAA recognizes that this requirement would protect persons within an OEZ during a launch but not their property. For the time being, the FAA will not address risks to the property of the public in an OEZ but leave the matter to be accommodated through private financial arrangements.

within one standard deviation[33] and a debris ballistic coefficient of three. The FAA employed a Delta in its analysis because its thrust profile fell between Atlas and Titan and thus provided a representation of the mean performance parameters of launch vehicles at Cape Canaveral Air Station. This data and use of the appendix B methodology corroborated the selection of 60 and 30 degree half angles.

In the early stages of flight, but past the 10 nautical mile range, a guided launch vehicle is capable of malfunction turns up to 30°. Therefore, a 30° half angle was used to define the secondary fan area beginning 10 nautical mile downrange and ending 100 nautical mile downrange. Once a launch vehicle has reached the 100 nautical mile downrange point, the increasing velocity in the downrange direction continues to reduce the launch vehicle's ability to maneuver through a large malfunction turn.

The FAA proposes a 100 nautical mile distance as a delimiter between the launch area and the downrange area. From the launch point out to approximately the point where the IIP is 100 nautical miles downrange, most launch vehicles will be subjected to the aerodynamic forces of wind and drag. Once a launch vehicle's IIP has cleared the 100 nm limit, the FAA is willing to assume for purposes of appendix A that most launch vehicles are outside the atmosphere.

Figure 1 in appendix A depicts the launch area of a flight corridor. Figure 1 shows the relative placement of the line segments comprising the launch area of a flight corridor. The left and right sides of the flight corridor are mirror images, with the flight azimuth serving as the line between the two sides. Table A-3 in appendix A tabulates the lengths of the perpendicular line segments comprising the launch area.

[33] The FAA employed the wind speeds from the Global Gridded Upper Air Statistics database for grid point 27.5 North geodetic latitude and 280.0 East longitude. The database covers the period 1980 through 1995.

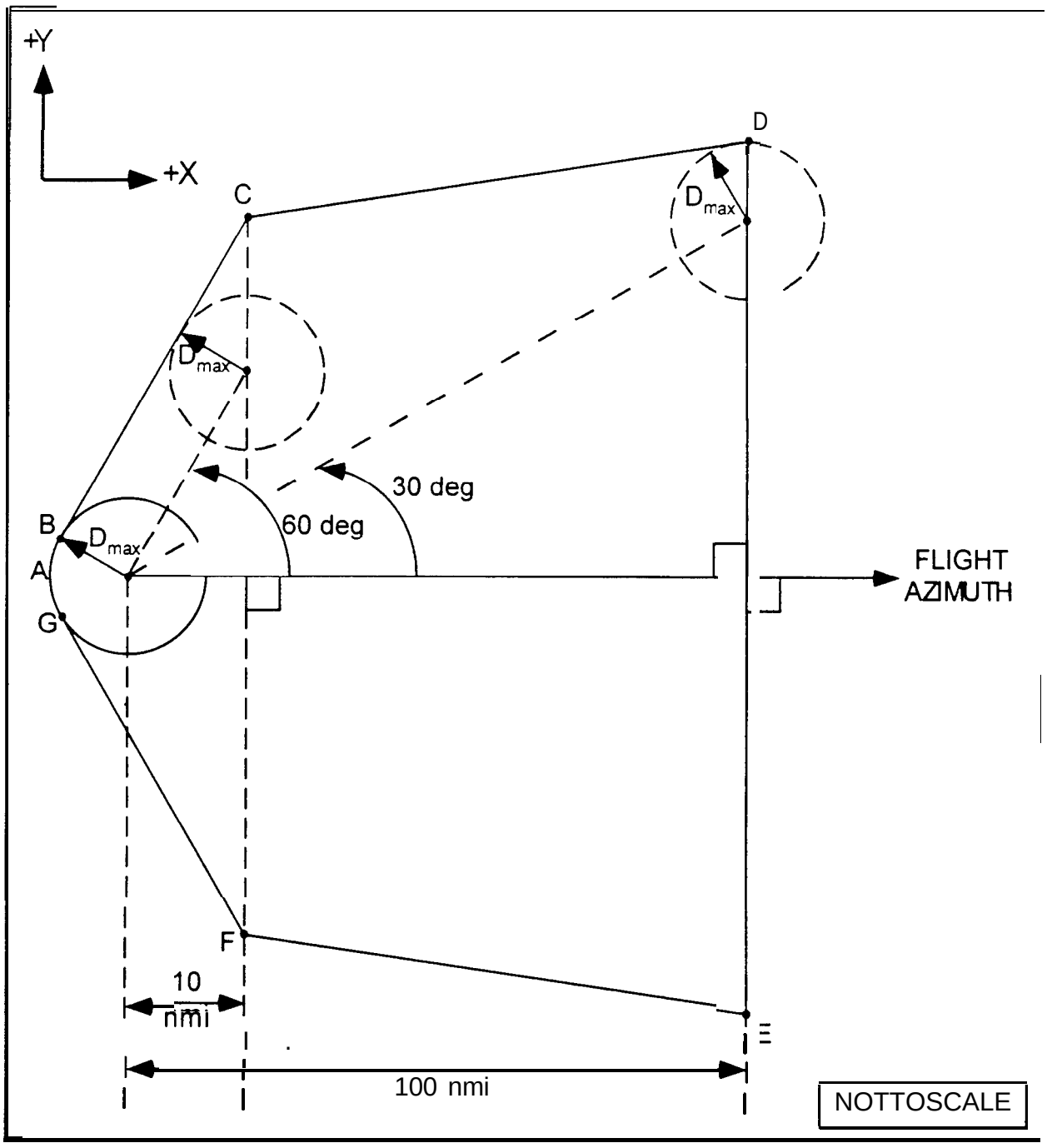

Figure 1
Flight Corridor Launch Area

Downrange Area

The FAA derived the proposed appendix A flight corridor's downrange area from hazard areas previously developed by federal launch ranges for the classes of launch vehicles defined in table 1 of section 420.21. The downrange fan area of the flight corridor. as shown in figure 2, is based on turning capabilities and impact dispersions of guided expendable launch vehicles. The size of the fan area is necessary for containing launch vehicle debris in the event that a launch vehicle failure initiates a maximum-rate malfunction turn and the flight termination system must be activated. In the later stages of flight a guided launch vehicle's capability to turn is reduced due to increasing velocities in the downrange direction. Therefore, a 10° half angle was used to define the downrange area, which reflects a combination of normal vehicle dispersions and malfunction turns.

The downrange area of a flight corridor begins 100 nm from a launch point and, for the guided orbital launch vehicle classes, extends 5,000 nm downrange from the launch point. The FAA proposes 5,000 nm as the end of an appendix A flight corridor because overflight dwell times for the remaining flight time result in an insignificant risk to the public. In general, after an orbital launch vehicle IIP has passed the 5,000 nm point its IIP range rates increase very rapidly as the launch vehicle approaches orbital insertion. As a result, the dwell times decrease significantly, reducing the overflight risk to insignificant levels. For an applicant employing a guided suborbital launch vehicle, a flight corridor would end with the impact dispersion area of a final stage.

Figure 2 depicts the downrange area of a flight corridor. The figure depicts the relative placement of the line segments comprising the downrange area of a flight

corridor. The left and right sides of a flight corridor are mirror images. with the flight azimuth serving as the line between the two sides. Table A-3 in appendix A provides the lengths of the line segments comprising the downrange area. The scaling information discussed above with respect to the launch area applies to the downrange area as well. If an applicant chooses a map with scale units other than inches per inch the FAA will require the applicant to describe the conversion algorithm to inches per inch and to provide example computations.

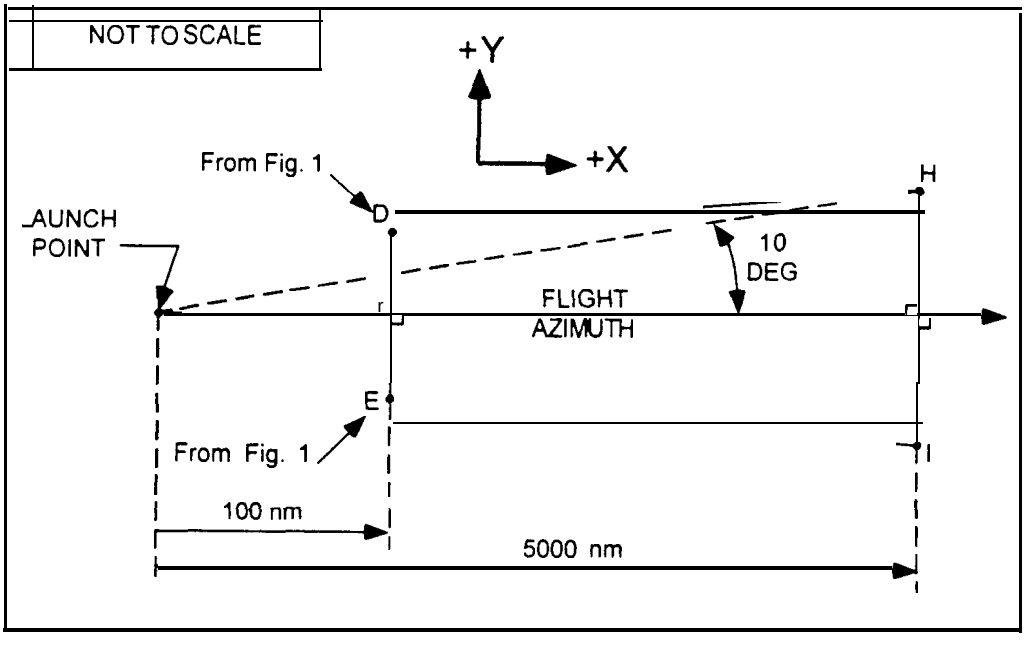

Figure 2
Downrange Area of Flight Corridor

Appendix B

Appendix B provides another means for creating a hypothetical flight corridor from an applicant's proposed launch site. As with a flight corridor created pursuant to appendix A, an appendix B corridor would identify the populations, those within the defined flight corridor, that must be analyzed for risk. An appendix B analysis offers an

applicant a means to demonstrate whether a flight corridor from its launch site satisfies the FAA's risk criteria for a guided orbital or suborbital launch vehicle. Appendix B allows an applicant to perform a more individualized containment analysis rather than relying on the more conservative estimates the FAA derived for appendix A. Because an appendix B analysis uses actual meteorological data and a trajectory, whether actual or computer simulated. of a real launch vehicle. it produces a flight corridor of greater accuracy than one created under appendix A. The FAA derived the methodology from techniques developed for federal launch ranges to calculate the distance that debris would travel as a function of perturbing forces. The FAA's derived the assumptions and simplifications in the appendix B analysis from launch vehicle data representing historical launch vehicle malfunction behavior.

A flight corridor created using appendix B contains, on its face, the same elements as an appendix A flight corridor, including a circular area around a launch point with a radius of D_{max}, an overflight exclusion zone, a launch area and a downrange area. Appendix B, however, produces and configures the last two elements differently than appendix A. The launch area of an appendix B flight corridor shows where launch vehicle debris would impact in the event of a vehicle failure, and takes into account local meteorological conditions. The downrange area of a flight corridor also shows where launch vehicle debris would impact given a vehicle failure, but takes into account vehicle imparted velocity, malfunctions turns, and vehicle guidance and performance dispersions. Also, like an appendix A flight corridor, the uprange portion of the flight corridor is described by a semi-circle arc that is a portion of either the most uprange dispersion circle, or the overflight exclusion zone, whichever is further uprange.

The FAA's proposed appendix B launch area analysis assumes a vehicle failure and destruction at one second intervals along a trajectory z value. which denotes height as measured from the launch point. up to 50.000 feet. An applicant must determine the maximum distance a hazardous piece of debris would travel under local meteorological conditions. The distances that the debris travels provide the boundaries of an appendix B flight corridor's launch area. After a height of 50,000 feet, which is where the FAA estimates, for purposes of this analysis, that debris created by a launch vehicle's destruction has less exposure to atmospheric forces. an applicant shall determine how far harmful debris created by destruction of a launch vehicle would travel based only on malfunction imparted velocity and vehicle dispersion in order to create a downrange area. Although the effects of wind above 50,000 feet are not, in reality, non-existent, they are sufficiently diminished when compared to the effects of malfunction imparted velocity and launch vehicle dispersion for purposes of this estimation.

D_{max} Circle

As with an appendix A flight corridor, an applicant must select each launch point at its proposed launch site from which it expects a guided expendable launch vehicle to take flight. An applicant must obtain the latitude and longitude of the launch point to four decimal places. If relying on a guided orbital launch vehicle, the applicant must also select a launch vehicle class from section 420.2 1, table 1, that best represents the largest class each proposed launch point would support. With this information, the applicant then ascertains the D_{max} that debris is expected to travel from a launch point if a mishap were to occur in the first 10 seconds of flight by employing table A- 1, appendix

A. Table .-i-l also provides a maximum distance for sub-orbital launch vehicles. The D_{max} distance provided by table A-l defines a circular area around the launch point.

Overflight Exclusion Zone

That circular area is part of an overflight exclusion zone. Again. an applicant uses information from appendix A to create an overflight exclusion zone, although an appendix B flight corridor's uprange boundary may extend further than its overflight exclusion zone. An overflight exclusion zone consists of the circular area defined by the radius D_{max} at the launch point and a corridor of the length prescribed by table A-2. Its downrange boundary is defined by an arc with a radius D_{max} centered on the endpoint prescribed by table A-2. The cross-range boundaries consist of two lines parallel to and to either side of the flight azimuth. Each line is tangent to the uprange and downrange D_{max} circles as shown in appendix A, figure A-l. Creation of an overflight exclusion zone is predetermined by the requirements of appendix A and does not require a trajectory for an actual launch vehicle. As with an appendix A overflight exclusion zone, and for the reasons described in this notice's discussion of appendix A, the FAA proposes to require that the public be excluded from this area during launch.

Launch Vehicle Trajectory

An applicant must also obtain or generate a launch vehicle trajectory. The applicant may use either commercially available software or a trajectory provided by the launch vehicle's manufacturer. Because appendix B is based on equations of motion in three dimensions, the appendix B analysis requires that the trajectory be described using a three axis coordinate system. The FAA recommends that an applicant use a WGS-84

ellipsoidal earth model" as the trajectory coordinate system reference ellipsoid in the appendices. because of its general applicability to the analyses that the FAA proposes in appendices B, C and D. the model's wide availability and its development in accordance with military standards and requirements. The WGS-84 model reflects the most current and the most accurate Department of Defense standards for earth models. WGS-84 provides a basic reference frame and geometric figure for the Earth and provides a means for relating positions on various local geodetic coordinate systems, including XYZ, to an Earth-centered, Earth-fixed coordinate system such as the EFG system employed in the appendix B analysis.

The FAA proposes to require time intervals used in the trajectory analysis of no greater than one second for both launch and downrange areas. Data frequency of one second is a compromise between the low data frequency requirements of the launch area, where dwell times are relatively long, and the high frequency requirements of the downrange area, where dwell times are correspondingly shorter. Accordingly, one second time intervals are sufficient to accommodate linear interpolation between trajectory time points, in the launch and downrange areas, and not degrade the accuracy requirements of the analysis.

In the launch area, an applicant's trajectory must include position data in terms of time after liftoff in right-handed XYZ coordinates centered on the proposed launch point, with the X-axis aligned with the flight azimuth. In the downrange area, the applicant's trajectory must show state vector data in terms of time after liftoff in right-handed x, y, z,

[34] Department of Defense World Geodetic System, Military Standard 2401 (Jan. 11, 1994).

x, y, z coordinates. centered on the proposed launch point. with the X-axis aligned with the flight azimuth.

The FAA proposes to require certain technical information to be used to compute an appendix B trajectory. The proposed appendix B parameters comprise the minimum information needed to create a three axis trajectory with 3-degrees-of-freedom (DOF). The 3-DOF are the trajectory positions in each of the three axes of the XYZ coordinate system and it is impossible to adequately describe the launch vehicle position with less than 3-DOF. Any software used to compute a trajectory must incorporate the data required by appendix B, paragraph (b)(1)(ii)(A)-(I).[35]

Launch Area

A launch area contains a launch point and an overflight exclusion zone, and constitutes the part of the flight corridor calculated using the effects of atmospheric drag forces on debris produced by a series of hypothetical destructions of a launch vehicle at one second intervals along that trajectory. For purposes of an appendix B analysis, a launch area extends from the further uprange of an OEZ arc or dispersion circle arc downrange to a point on the surface of the earth that corresponds to the debris impact locations. assuming a failure of the vehicle in flight at a height of 50,000 feet. Typically, federal launch ranges account for five major parameters to estimate the size of a flight corridor. These include the effects of vehicle-imparted velocity on debris, the change in launch vehicle position and velocity due to a malfunction turn, guidance errors, the ballistic coeffkient of debris, and wind. However, imparted velocity, malfunction turn, and trajectory dispersion, although not insignificant, do not play as great a role early in

[35] Software for creating a 3-DOF trajectory with the accuracy required for an appendix B analysis is commercially available.

flight as the wind effects on debris. The wind effect on debris. in turn. depends on the ballistic coefficient of the debris. The FAA determined that for purposes of the launch area. of these parameters. launch vehicle debris and meteorological conditions constitute the most significant. and the FAA therefore proposes to focus on these two factors in the launch area.“’

The FAA proposes to require an applicant to calculate circles that approximate the debris dispersion for each one second time point on a launch vehicle trajectory. The cross-range lines tangent to those circles provide the borders of a launch area. Calculating the circles consists, in general terms, of a two step process. An applicant must first define 15 mean geometric height intervals along the proposed trajectory in order to obtain data, in accordance with subparagraph (c)(4) of appendix B, regarding the mean atmospheric density, maximum wind speed, fall times and debris dispersions in each of those height intervals. An applicant must then use that data in the calculations proposed in subparagraph (c)(5) to derive the radius applicable to each height interval (Z_i). Having obtained that radius, an applicant uses it to describe, pursuant to subparagraph (c)(6), a circle referred to as a debris dispersion circle (D_i), around each one second time interval along the vehicle’s trajectory, starting at the launch point. An applicant will then ascertain the cross-range boundaries of a flight corridor’s launch area by drawing lines that are tangent to all dispersion circles. The final D_i dispersion circle forms the downrange boundary of a flight corridor’s launch area.

The launch area represents the effects of meteorological conditions on how far inert debris with a ballistic coefficient of 3 lb/ft.^{2} would travel. Debris comes in many sizes and shapes, but the FAA does not’ propose to require an applicant’s location review

[36] Note that the determination of the size of D_{max} included considerations of malfunction turns as well

analysis to take all such possibilities into account. A complete analysis for an actual launch would entail the determination of the type and size of debris created by each credible failure mode, and the velocity imparted to each piece of debris due to the failure. Instead. for put-poses of the appendix B analysis. the FAA proposes to categorize launch vehicle debris by a ballistic coefficient that accounts for the smallest inert debris that may cause harm and that also accounts for the debris most sensitive to wind. A ballistic coefficient reflects the sensitivity of weight and area ratios to drag forces, such as wind dispersion effect. The FAA evaluated wind drift effects on a piece of debris with the smallest hazardous ballistic coefficient. A debris piece with the smallest hazardous ballistic coefficient will play the largest role in ascertaining the total debris dispersion in a launch area. Low beta debris, namely, debris with a ballistic coefficient less than or equal to three pounds per square foot, will have a lower terminal velocity than high ballistic coefficient debris and will spend more time being dispersed by wind forces on descent. Therefore, low ballistic coefficient debris will disperse farther than high ballistic coefficient debris. The FAA proposes a debris piece with a ballistic coefficient of three pounds per square foot for launch area calculations because it is the most wind sensitive debris piece with a potential for harm of reasonable significance. Experience at federal launch ranges has shown that, on average, a debris piece that has a ballistic coefficient of less than three pounds per square foot is not significant in terms of its potential to harm a person in the open.

Although the FAA proposes to assume a ballistic coefficient of three as the smallest piece of wind sensitive debris hazardous to the public, ballistic coefficient is not directly related to fatality criteria based’on the kinetic energy of debris. The ballistic

coefficient of three is related to a kinetic energy of 58 ft/lbs which represents a probability of fatality of 50 percent for a standing person. It is therefore possible that fatalities could occur for a lower ballistic coefficient and that no fatalities may occur for a higher ballistic coefficient. The FAA proposes to incorporate neither of these conditions into this analysis. and invites comment.

In addition to knowing what debris is of concern, an applicant must know the local meteorological conditions. The FAA proposes that an applicant obtain meteorological data for 15 height intervals in a launch area up to 50,000 feet. The FAA proposes an upper limit of 50,000 feet in the launch area containment analysis of debris because winds above this altitude contribute little to drift distance. Also, once a launch vehicle reaches an altitude of 50,000 feet its velocity vector has pitched down range so that a malfunction turn and explosion velocity, rather than atmospheric drag and wind effects, play the dominant role in determining the dispersion of debris as the debris falls to the surface. The combination of these two factors significantly reduces the effect of winds on uprange and crossrange dispersion after a launch vehicle reaches 50,000 feet. For altitudes less than 50,000 feet, at the same time as low ballistic coefficient debris pieces are highly sensitive to drag forces, the velocity of an explosion caused by destroying a launch vehicle contributes relatively little to the dispersion effect because the drag produced on these light weight pieces results in a high deceleration so they achieve terminal velocity almost instantaneously and drift with the wind. Therefore, launch vehicle induced explosion-velocities are not considered for the launch area of an appendix B containment analysis. Instead, the FAA proposes to require an applicant to use local statistical wind data by altitude for fifteen height intervals. The data must

include altitude. atmospheric density. mean East/West meridianal (u) and North South zonal wind (v). the standard deviation of u and v wind, a correlation coefficient. the number of observations and the wind percentile.

Data acceptable to the FAA is available from NOAA's National Climatic Data Center (NCDC). NOAA Data Centers. of which the NCDC is the largest. provide long-term preservation of, management, and ready accessibility to environmental data. The Centers are part of the National Environmental Satellite, Data and Information Service. The NCDC data set acceptable to the FAA is the "Global Gridded Upper Air Statistics, 1980 - 1995, V 1.1, March 1996 (CD-ROM)." The Global Gridded Upper Air Statistics (GGUAS) CD-ROM data set describes the atmosphere for each month of the represented year on a 2.5 degree global grid at 15 standard pressure levels. NCDC provides compiled mean and standard deviation values for sea level pressure, wind speed, air temperature, dew point, height and density. GGUAS also complies eight-point wind roses. The spatial resolution is a 73 x 144 grid spaced at 2.5 degrees and the temporal resolution is one month. Monthly data have been statistically combined for the period of record 1980 - 1995.

To simplify the containment analysis, the FAA proposes to allow an applicant to use a mean wind (50%). The FAA proposes to further simplify the analysis by assuming that an applicant's launch pad height is equal to the surface level of the wind measurements provided by the NCDC data base. The actual pad height could be lower or higher than the surface level wind measurement height. The difference between the actual pad height and the surface level measurement height is considered insignificant in terms of its effect on the impact dispersion radius.

The FAA notes that the NCDC database will not necessarily contain measurements of winds for any particular launch site proposed. If a launch point is located in the center of a 2.5 degree NCDC weather grid cell. the farthest distance to a grid cell comer would be along a diagonal from the center of the grid cell to a comer of the grid cell. The wind measurements will be no more than approximately 106 nm from the launch point. This distance is close enough for purposes of a location review containment analysis, and occurs only for a grid located on the equator. In general. the topography within approximately 106 nm of a launch point is assumed to be relatively similar with respect to height above mean-sea-level. As the launch point latitude increases the distance from the wind measurement grid point will decrease, which will reduce errors introduced by this assumption.

Having obtained the necessary meteorological data, an applicant would use data from the GGUAS CD-ROM to estimate the mean atmospheric density, maximum wind speed, height interval fall times, and height interval debris dispersions for 15 mean geometric height intervals. Altitude intervals are denoted by the subscript "j". An applicant would then calculate the debris dispersion radius (D_i) for each trajectory position whose "Z" values, are less than 50,000 ft. Each trajectory time considered is denoted by the variable subscript "i". The initial value of "i" is one and the value is increased by increments of one for each subsequent "Z" value evaluated. The major dispersion factors are a combination of wind velocity and debris fall time. Because the atmospheric density is a function of altitude and effects the resultant fall time, D_i is estimated by summing the radial dispersions computed for each altitude interval the debris intersects on its descent trajectory. Once all the debris dispersion radii have been

calculated, the flight corridor's launch area is produced by plotting each debris dispersion circle on a map, and drawing enveloping lines that enclose the outer boundary of the debris dispersion circles. The uprange portion of the flight corridor is described by a semi-circle arc that is a portion of either the most uprange D_i dispersion circle, or the overflight exclusion zone, whichever is further uprange. The enveloping lines that enclose the final D_i dispersion circle forms the downrange boundary of a flight corridor's launch area.

Downrange Area Containment Analysis

A containment analysis also describes the dimensions of a flight corridor's downrange area. The FAA designed the downrange area analysis to accommodate launch vehicle imparted velocity, malfunction turns, and vehicle guidance and performance dispersions. The analysis to obtain the downrange area of a flight corridor for guided orbital and suborbital launch vehicle trajectories starts with trajectory positions with heights greater than 50,000 feet, that is, the point where the launch area analysis ends. A downrange area for a guided orbital launch vehicle ends 5,000 nautical miles from the launch point. If an applicant has chosen a guided suborbital launch vehicle for the analysis, the analysis must define the impact dispersion area for the final stage, and that impact dispersion area marks the end of a downrange area.

An applicant computes the cross-range boundaries of the downrange area of a flight corridor by calculating the launch vehicle position after a simulated worst-case four second turn, rotating the launch vehicle state vector to account for vehicle guidance and performance dispersions, and then computing an instantaneous impact point. The locus of IIPs describes the impact boundary.

As a first step. an applicant computes a reduction ratio factor that decreases with increasing launch vehicle range. Secondly. an applicant computes the launch vehicle position after a simulated worst-case four-second malfunction turn for each altitude interval along a trajectory. For purposes of the launch site location review. the FAA proposes to rely on a velocity vector malfunction turn angle set at 45^0 and to decrease this turn angle using the reduction ratio factor, as a function of downrange distance to simulate the constraining effects of increasing velocity in the downrange direction on malfunction turn capability. See figure B-2. The FAA assumes this worst-case delay result in order to account for the maximum dispersion of the vehicle during the time necessary for a person in charge of destroying a launch vehicle to detect a vehicle failure and cause the vehicle's destruction. Figure B-2 in appendix B depicts the velocity vector movement in the yaw plane of the vehicle body axis coordinate system . The figure below depicts the state vector axes and impact locations for a malfunction turn failure and for an on-trajectory failure.

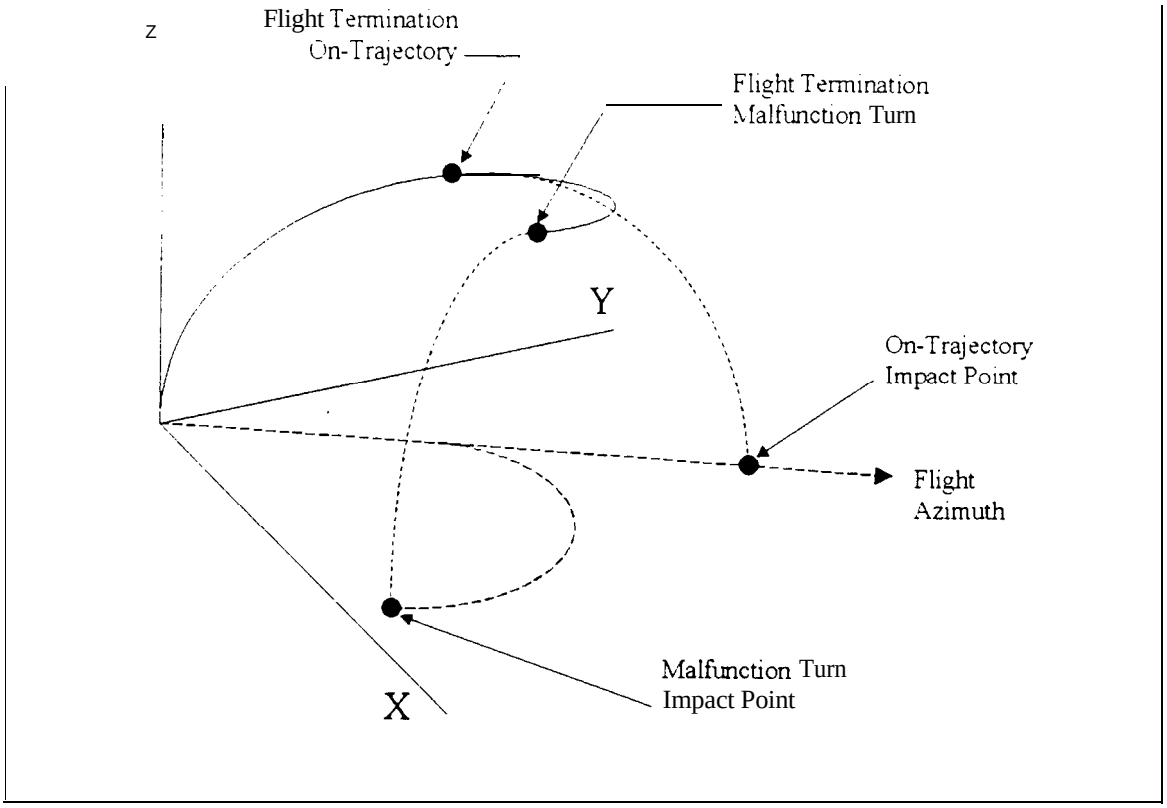

The second step described above assumes perfect performance of the launch vehicle up until the beginning of the malfunction turn. In order, however, to account for normal five sigma (5^{σ}) performance and guidance dispersions of the launch vehicle prior to the malfunction turn, the applicant next rotates the trajectory state vector. The trajectory state-vector rotation is accomplished in conjunction with a XYZ to ENU coordinate system transformation. This transformation rotates the X and Y axes about the Z axis. The Z and U axes are coincident. Both position and velocity components are rotated. The FAA intends the trajectory azimuth rotation to account for the normal j-sigma launch vehicle performance and guidance dispersions that may exist at the beginning of a malfunction turn. The rotation angle decreases from three degrees to one degree as the vehicle proceeds downrange, and the rate of decrease is a function of

distance from the launch point. This is done because the trajectory azimuth of a launch vehicle with j-sigma performance and guidance dispersions early in flight could be approximately ±3 degrees from the nominal flight azimuth. Since this azimuth offset is not considered a failure response, the guidance. navigation, and control system is expected to achieve steering corrections. These corrections will eventually reduce the angular offset later in flight as the launch vehicle targets the mission objectives for orbital insertion. If a launch vehicle has 5-sigma performance and guidance dispersions later in flight, the effects of increasing velocity in the downrange direction limits a launch vehicle's capability to alter the trajectory's azimuth. Launch vehicles in the four launch vehicle classes were reviewed to determine the typical range of malfunction-turning rates in the downrange area. The FAA found these rates to be relatively small compared to launch area rates. The FAA proposes the three and one degree turn rates because they encompass the turn rates found during the review process.

Before initiating the IIP computations, an applicant must transform the ENU coordinate system to an EFG coordinate system. This EFG coordinate transformation is employed to simplify the IIP computation.

The IIP computations proposed in appendix B are used for determining the IIPs to either side of a trajectory by creating latitude and longitude pairs for the left and right flight corridor boundaries. Connecting the latitude and longitude pairs describes the boundary of the downrange area of a flight corridor. The launch site location review IIP calculations assume the absence of atmospheric drag effects. Equations B46 - B69 implement an iterative solution to the problem of determining an impact point. This iterative technique includes checks for conditions that will not result in impact point

solutions. The conditions prohibiting impact solutions are: (1) an initial launch vehicle position below the earth's surface. (3) a trajectory orbit that is not elliptical. but, parabolic or hyperbolic. (3) a positive perigee height. where the trajectory orbit does not intersect the earth. and (4) the iterative solution does not converge. Any one of the conditions given above will prohibit the computation of an impact point. The iterative approach in equations B46-B69 solves these problems.

Software

The FAA has developed a software tool that performs the flight corridor calculations required by appendix B for a guided orbital launch vehicle. The software was developed in FORTRAN. All of the assumptions and equations contained in appendix B are implemented in the program. An applicant must provide the geodetic latitude, longitude, launch azimuth, desired wind percentile, D_{max} from table A-l and D_{oez} from table A-3 as input to the program. The software outputs an ASCII text file of geodetic latitudes and longitudes that describe a flight corridor boundary.

Estimating Public Risk

Upon completing a flight corridor, an applicant must estimate the risk to the public within the flight corridor to determine whether that risk falls within acceptable levels. If an applicant demonstrates that no part of the flight corridor is over a populated area, the flight corridor satisfies the FAA's risk thresholds, and an applicant's application may rely on its appendix B analysis. If a flight corridor includes a populated area, an applicant has the option of rotating an appendix B flight corridor using a different launch point or azimuth to avoid population, or of conducting an overflight risk analysis as provided in appendix C.

Appendix C

Under a launch site location recieu. once an applicant has created a flight corridor employing either appendix A or B. the applicant must ascertain whether there is population within the flight corridor. If there is no population. the FAA will approve the location of the proposed launch point for the type and class of launch vehicle analyzed. If there is population. an applicant must employ appendix C to perform an overflight risk analysis for the corridor. An appendix C risk analysis determines whether or not the risk to the public from a hypothetical launch exceeds the FAA's risk threshold of an estimated expected casualty (E,) of no more than 30 x 10^{-6} per launch. An appendix C risk analysis estimates the E_c overflight contribution from a single hypothetical launch whose flight termination system is assumed to work perfectly. The analysis takes into account the probability of a vehicle failing throughout its trajectory, dwell times[37] over individual populated areas. and the probability of impact within those areas. The analysis also takes into account the effective casualty area of a vehicle class, the size of the populated area, and the population density of the exposed population.

Estimating E_c for an actual launch takes a large number of variables and considerations into account. The risk analysis provided in appendix C provides a somewhat simpler approach to estimating E_c within the boundaries of a flight corridor than might be necessary in performing a risk analysis for an actual launch. The FAA proposes, for purposes of determining the acceptability of a launch site's location. to rely only on variables relevant to ensuring that the site itself offers at least one flight corridor

[37] Although an applicant who calculates an appendix B flight corridor will know actual dwell times for its E_c analysis, the FAA proposes to supply a constant to approximate dwell time for **an** applicant who relies on an appendix A flight corridor.

sufficiently isolated from population for safety. Accordingly. many of the factors that a launch operator will take into account will not be reflected here.

In brief. in order for an applicant to perform an appendix C risk analysis. the applicant must first determine whether any populated areas are present uithin an appendix A or B flight corridor. If so. the applicant must obtain area and population data. At this point an applicant has a choice. Appendix C requires that an applicant calculate the probability of impact for each populated area, and then determine an E_c value for each populated area. To obtain the estimated E_c for an entire flight corridor, the applicant adds-or sums-the E_c results for each populated area. If the population within the flight corridor is relatively small, an applicant may wish to conduct a less rigorous analysis by making conservative assumptions. Appendix C also offers the option of analyzing a worst-case flight corridor for those flight corridors where such an approach might save time and analysis. Examples of such simplifications are provided.

Identification and Location of Population

In order to perform an E_c analysis, an applicant must first identify the populated areas within a flight corridor. For the first 100 nautical miles from a launch point downrange a U.S. census block group serves as the maximum size of an individual populated area permitted under an appendix C analysis. The proposed maximum permitted size of an individual populated area beyond 100 nautical miles downrange is a 1 degree latitude x 1 degree longitude grid. The size of the areas analyzed will play out differently depending on the location of the proposed launch site. For example, if an applicant proposed a coastal site, the applicant would presumably present the FAA with a flight corridor mostly over water. Population may be limited to that of a few islands,

minimizing the amount of data and analysis necessary. If an applicant proposes a launch site located further inland. the applicant would need to obtain the area and population of each census block group in the first 100 nm of the flight corridor. This may prove time consuming. although the FAA has proposed alternative approaches that may simplify the process for such applicants. An applicant may also propose to operate a launch site on foreign territory, where U.S. census data would not apply. In that event. the FAA would apply the principles underlying a launch site location review to the available data on a case-by-case basis.

The proposed regulations require the analysis of populations at the census block group level for the first 100 nm from the launch point in the flight corridor. An applicant shall employ data from the latest census.[38] An applicant must also include population that may not be included in the U.S. census. such as military base personnel. The FAA recognizes a census block group to be a reasonable populated area for analysis because the risk early in flight is greatest due to long dwell times. IIP range rates in a launch area are relatively slow, which exposes the launch area populations to launch vehicle risks for a longer period of time when compared to similar populations in the downrange area. Depending on the launch site and the launch vehicle, a census block group could be exposed to launch vehicle risks for tens of seconds. In contrast to the size of a populated area in the downrange area, the increased risk due to longer dwell times requires a more detailed evaluation of the launch area for E_c purposes. A census block group is an appropriate size for analysis because it is small enough to accommodate the assumption that a populated area contains homogeneously distributed population without grossly

[38] Some geographic information software has the capacity to import U.S. Census Bureau demographic and geographic data.

distorting the outcome of the E_c estimates. and because the data is readily available for populations in the United States. Although a census block is smaller and therefore even more accurate. only census block centroids, rather than the more useful geographic area, are available from the U.S. Census Bureau. The FAA also proposes to allow the census block group to serve as the smallest unit addressed because electronic data is available at the census block group level, which will allow for more efficient execution of the computations. Although not as accurate as a census block, a census block group is also sufficiently accurate to serve as the smallest populated area for a launch site location review because the launch licensing process will mandate the more thorough risk analysis necessary for a particular launch. An applicant may find the need to use only a portion of a census block group, such as when a populated area is divided by a flight corridor boundary. In that case an applicant should use the population density of the block group to reflect the population in that portion of the census block group.

The FAA proposes to allow an applicant to evaluate the presence of people in larger increments of area in the downrange area of a flight corridor than in the launch area of a flight corridor. Populations in the downrange area of a flight corridor must be analyzed in areas no greater than 1° x 1° latitude and longitude grid coordinates. Because dwell times downrange are shorter, the risk to the individual populated areas is less and, therefore, the FAA is willing to accept a different degree of accuracy. IIP range rates in the downrange area can achieve speeds of 500 nm /second. Because the longest distance in a grid space would be approximately 85 nm for a grid on the equator, which is where the largest grid area will be found, the launch vehicle IIP dwell time would be less then

0.20 seconds over that grid. This reduces the risk to population in that grid significantly compared with population in the launch area.

The data needed for a downrange area analysis is also readily available. One source for population data in an area no greater than 1° x 1° latitude and longitude grid coordinates is a database of the Carbon Dioxide Information Analysis Center (CDIAC). Oak Ridge National Laboratory. The CDIAC database is "Global Population Distribution (1990), Terrestrial Area and Country Name Information on a One by One Degree Grid Cell Basis." This database contains one degree by one degree grid information on the world-wide distribution of population for 1990 and country specific information on the percentage of a country's population present in each grid cell.

The CDIAC obtained its population estimates from the United Nations FAO Yearbook,[39] the Guinness World Data Book,[40] and the Rand McNally World Atlas" for approximately 6.000 cities with populations greater than 50,000 inhabitants. The population data was updated by CDIAC to 1990 values with available census data. For the rural population allocation, the CDIAC developed global rural population distribution factors based on national population data, data on approximately 90,000 cities and towns, and the assumption that rural population is proportional to the number of cities and towns within each grid cell for each country.

Probability of Impact

The next step in the process would be to ascertain the probability of impact for each populated area. In other words, an applicant must find the probability that debris will land in each populated area within the flight corridor under analysis. For this, the

[39] United Nations FAO Yearbook, Vol. 47, Rome, 1993.
[40] The Guinness World Data Book, Guinness Pub. Ltd., Middlesex, England, 1993.

applicant must find the probability of impact in both the cross-range and downrange directions. by employing equation C 1 for an appendix A flight corridor for an orbital launch or equations C2 through C4 for an appendix A corridor that describes a suborbital launch. For an analysis based on an appendix B flight corridor. an applicant will employ equation C5 for an orbital launch or equations C6 through C8 for a suborbital launch. For both appendix A and B corridors, the probability of impact (Pi) within a particular populated area is equal to the product of the probability of impact in the downrange (P_x) and cross range (P_y) directions, and the probability of vehicle failure (P_f).

$$P_i = P_y * P_x * P_f$$

The analysis applicable to both appendix A and B flight corridors is the same for the cross-range direction[42], but employs a different equation to determine the probability of impact in the downrange direction. For an appendix A corridor, the FAA proposes to specify a constant in equation C 1 to approximate dwell time for the downrange direction. In equation C5 an applicant will employ actual dwell times obtained from the trajectory generated pursuant to appendix B.

An applicant who relies on an appendix A flight corridor will use equation Cl to determine the probability of impact for a particular populated area in the downrange

---

[41] Rand McNally World Atlas, Rand McNally, New York, 199 I.

[42] For Equations C-l, C-3, C-5 and C-7 the FAA approximated the probability of impact in the cross-range direction (P_y) by applying Simpson's Normal Probability Function. The FAA employed Simpson's rule to derive the following equation:

$$P_y = \frac{\left(\frac{|y_2 - y_1|}{\sigma_y}\right)}{6\sqrt{2\pi}} \cdot \left[\exp\left(\frac{-\left(\frac{y_1}{\sigma_y}\right)^2}{2}\right) + 4 \cdot \exp\left[\frac{-\left(\frac{y_1 + y_2}{2\sigma_y}\right)^2}{2}\right] + \exp\left(\frac{-\left(\frac{y_2}{\sigma_y}\right)^2}{2}\right)\right]$$

Simpson's approximation of the Elliptical Normal Probability Function is described in General Motors Corporation Defense System Division's Elliptical Normal Probability Function, (Apr. 6, 1960).

direction by finding the range rate and assuming a total thrusting time of 643 seconds. Equation C 1 reflects the fact that appendix A does not employ trajectory data. and therefore. employs a technique for estimating dwell times as a function of range and range rate to determine the probability of impact in the downrange direction. Proposed table C-2 provides the appendix A flight corridor IIP range intervals and corresponding IIP range rates for use in Equation C 1.

To create proposed table C-2, the FAA employed actual trajectory data to determine individual range rates for Atlas, Delta and Titan launch vehicles. The FAA computed the IIP for each trajectory time point, and the range rates were determined by subtracting IIP ranges (RIIP) over one-second intervals. This provided a per second range rate. referred to below as R-dot. The average range rates over the range intervals, shown in the table below, were estimated by dividing the difference of the upper value of adjacent IIP ranges by the elapsed trajectory time over the range interval. For example. the following Delta launch vehicle data was used to determine the IIP range rate from 101 through 500 nm:

RIIP1 = 100 nm
TALOl(time after lift-off 1) = 97 sec
RIIP2 = 500 nm
TAL02 = 217 sec

(RIIP2 - RIIP1)/(TALO2 - TALO1) = 3.33 nm/s

The FAA derived the total average thrusting time of 643 seconds from the data in table 5 below by dividing the difference of the upper value of adjacent IIP ranges by the average IIP range rate corresponding to the largest IIP range and summing the results over the set of IIP ranges. The following computations are given as examples of how the FM reached this determination.

Let: RIIP1 = 100 nm
RIIP2 = 500 nm
R-dot = 3.00 nm/s

(RIIP2 - RIIP1)/R-dot = 133.33 sec

Table 5
Data To Derive Total Thrusting Time

IIP Range (nm)	IIP Range Rate (nm/s)				Δt(s)
	DELTA	ATLAS	TITAN	AVG	
0 – 100	1.03	0.85	0.96	0.91	110.50
101 – 500	3.33	3.77	2.23	3.00	133.33
501 – 1500	4.17	3.66	2.73	3.20	312.99
1500 – 2500	9.01	21.74	12.99	17.37	57.59
2501 – 3000	33.33	50.00	41.67	45.84	10.91
3001 – 4000	66.67	90.91	83.33	87.12	11.48
4001 – 5000	166.67	142.86	166.67	154.77	6.46
				TOTAL-Δt	**643.26**

The "X" distances were measured directly off the mapping information source.

An applicant who relies on an appendix B flight corridor will employ proposed equation C5 or equations C6 through C8 depending on whether the flight corridor culminates in an impact dispersion area or not. Equation C5 reflects the fact that, unlike an appendix A flight corridor, the trajectory data used to create an appendix B flight corridor provides downrange instantaneous impact points (IIPs). Accordingly, the dwell time associated with a populated area may be ascertained for the difference between the closest and furthest downrange distances of the populated area. See figure C-2.

An applicant may find the following sis step procedure helpful in determining the dwell time for individual populated areas that equation C5 calls for. The subscripts do not correspond to subscripts in the appendix.

Step 1: Determine the trajectory time (t_1) associated with the trajectory IIP position (xi) that immediately precedes the uprange point on the populated area boundary. This is accomplished by locating the IIP points in the vicinity of the populated area. drawing lines normal to the trajectory IIP ground trace. and choosing the trajectory time for the IIP point whose normal is closest to the uprange boundary of the populated area but does not intersect it. The distance from the launch point to x_1 may be determined using the range and bearing equations in appendix A. paragraph (b).

Step 2: Determine the trajectory time (t_2) associated with the trajectory IIP position (x_2) that just exceeds the downrange point on the populated area boundary. This is accomplished by locating the IIP points in the vicinity of the populated area, drawing lines normal to the trajectory IIP ground trace, and choosing the trajectory time for the IIP point whose normal is closest to the downrange boundary of the populated area but does not intersect it. The distance from the launch point to x_2 may be determined using the range and bearing equations in Appendix A, section (b).

Step 3: Determine the average IIP range rate (6) for the flight period determined in Steps 1 and 2 above.

$$\bar{\dot{R}} = \frac{(x_2 - x_1)}{(t_2 - t_1)} \quad \text{(units in nm / s)}$$

Step 4: Determine the distance along the nominal trajectory to the uprange point (x_3) on the populated area boundary. This is accomplished by drawing a line normal to the trajectory IIP ground trace and tangent to the uprange boundary of the populated area, and determining the distance along the nominal trajectory IIP ground trace from the launch point to the intersection of the normal and the ground trace.

Step 5: Determine the distance along the nominal trajectory to the downrange point (x_4) on the populated area boundary. This is accomplished by drawing a line normal to the trajectory IIP ground trace and tangent to the downrange boundary of the populated area , and determining the distance along the nominal trajectory IIP ground trace from the launch point to the intersection of the normal and the ground trace.

Step 6: The dwell time (t_d) is estimated by the following equation.

$$t_d = \frac{(x_4 - x_3)}{\dot{R}} \quad \text{(units in seconds)}$$

For either type of flight corridor, an applicant determines the probability of impact in the cross range direction, (P_y), through a series of steps, of which the first is measuring the distance from the nominal trajectory IIP ground trace to the closest and furthest points in the cross range direction of the area that contains population. The populated area may consist of a census block group or a 1 degree latitude by 1 degree longitude grid. See figure C- 1. To determine the distribution of the debris pattern in that populated area. the applicant needs to estimate the standard deviation of debris impacts. The FAA proposes that, for purposes of an Appendix C analysis, that the cross-range boundaries of a flight corridor represent five standard deviations 5σ of all debris impacts

from normal and malfunction trajectories." To apply this to a populated area. an applicant must first find the distance from the nominal trajectory to the cross-range boundary. measured on a line normal to the trajectory through the geographic center of the populated area. and then divide that distance by five.

Finally. the probability of failure is also an element in calculating the probability of impact. The FAA proposes for the launch site location analysis to assign a failure probability (P_f) constant of $P_f = 0.10$ for guided launch vehicles. This represents a conservative estimate of the failure percentage of current launch vehicles. since many current launch vehicles are more reliable. The appendix C process assumes that the probability of impacting within the corridor is one, and the probability of impacting outside the corridor is zero. The flight termination system is assumed to function perfectly in all failure scenarios.

A final variation on computing the probability of impact for a particular populated area is used when computing the probability of impact (Pi) within the impact dispersion area of a guided suborbital launch vehicle. In this case, the probability of success (P_s) is substituted for the probability of failure (P_f), and an applicant shall employ a method similar to that used in appendix D to calculate the probability of impact for any populated areas inside the impact dispersion area. This divergence, the use of probability of success rather than probability of failure, from the variable used for an orbital launch vehicle arises out of the relative risk associated with an impact dispersion area of a guided sub-

" Five sigma should represent 99.9999426% of all debris impacts from normal and malfunction trajectories assuming a functioning FTS. The one-sided-tail percentage area under the Gaussian Normal Probability curve beyond five-sigma is approximately 0.000000287%. Since the normal curve is symmetric this value can be doubled and subtracted from one (I) to determine the percentage area between the plus-and-minus five sigma limits. This results in the 99.9999426% value. See, Frederick E. Croxton, Elementary Statistics with Applications in Medicine, 323 (1953).

orbital launch vehicle. The same risks associated with a guided orbital launch are also associated with a guided sub-orbital launch except for the final stage of the guided sub-orbital mission. which is intended to return to earth rather than to enter orbit. On the basis of past history, the FAA has concluded that the final stage has a high reliability and will impact in the designated impact dispersion area. as intended for a successful mission. The FAA intends through its proposed launch site location review to analyze high risk events. and because the risk due to a planned impact in the dispersion area would be much higher than an unplanned impact, the FAA proposes to use P_s inside the impact dispersion area rather than P_f for determining the probability of impact in a guided suborbital launch vehicle's impact dispersion area.[44]

Totaling Risk of All Populated Areas in Flight Corridor

The E_c estimate for a flight corridor is a summation of the risk to each populated area and results in an estimate of E_c inside the corridor, E_c (Corridor). This means that an applicant would estimate E_c for each individual populated area within a flight corridor. using the following equation:

$$E_{ck} = P_i \cdot \left(\frac{A_c}{A_k} \right) \cdot N_k$$

P_i is the probability of hitting the populated area. A_C is the effective casualty area of the vehicle and may be obtained from table C-3. A_k is the area of the populated area. N_k is the population in A_k, and is obtained from census data. The label "k" is used to identify the individual populated area. The summed E_c for all populated areas added together is the E_c (Corridor).

[44] The actual probability used in the analysis is 0.98.

The FAA proposes to require an applicant to use an effective casualty, area specific to a launch vehicle class and range when performing the E_c calculation. An effective casualty area (A,) means the aggregate casualty area of each piece of debris created by a launch vehicle failure at particular points on its trajectory. The casualty area for each piece of debris is the area within which 100 percent of the unprotected population on the ground is assumed to be a casualty. This area is based on the characteristics of the debris piece including its size, the path angle of its trajectory, impact explosions, and debris skip, splatter, and bounce. In each of the vehicle classes, the A, decreases, resulting in a smaller casualty area, as a function of distance downrange because vehicle size and explosive potential decreases as explosive propellant is consumed and expended stages are ejected during vehicle flight.

An effective casualty area as a function of time-after-liftoff is proposed in table C-3 for launch vehicle classes listed in table 1 of section 420.2 1. The FAA derived the effective casualty areas in table C-3 from DAMP, a series of risk estimation computer programs used at federal launch ranges, to evaluate the vehicle classes described in table 1, section 420.2 1. DAMP considers other factors besides debris characteristics, such as the size of a standing person. which increases the casualty area, and sheltering, which would tend to decrease the casualty area. Because considering sheltering has a greater effect than considering the size of a standing person, and was not assumed in table C-3, the effective casualty areas in table C-3 are conservative.

An applicant calculates casualty expectancy for each populated area within a flight corridor. After the casualty expectancies have been estimated for all populated areas. the $\dot{E}_c$ values are summed to obtain the total corridor risk. The total is multiplied

by two to estimate the final value for E_c(Corridor). The FAX is proposing this multiplier to account for the error introduced by the risk estimation approach of the launch site location review. Both the method used to construct a flight corridor and the method used to analyze risk contributes error. For example. an appendix A flight corridor is not based on actual wind data. and even though its size is conservative in nature. this size alone can cause the risk to be underestimated in appendix C. In other words. what the analysis gains in conservatism with the greater size of an appendix A corridor it may, on occasion. lose in conservatism due to the corresponding decrease in population density relative to an appendix B corridor. Conversely, an appendix B corridor, which may result in a higher E_c total due to the greater density attributable to the smaller corridor, may not encompass a populated area that would otherwise be analyzed for risk as part of an appendix A corridor. In addition, these calculations do not account for any secondary effects such as fire and collapsing structures that may result from impacting debris. Accordingly, to compensate for these inherent discrepancies, a safety factor is advisable in order to guard against licensing the operation of a launch site which may never be able to support a licensed launch. Also, an appendix B flight corridor is based on a number of approximations, including the descent rate of a piece of debris, the variability of a nominal launch vehicle trajectory prior to a failure, and a malfunction turn. Both the appendix A and B flight corridors for orbital launch vehicles end at 5,000 nm. leaving out a large area of overflight, albeit with an IIP with very high velocity and extremely small dwell times. Additionally, the E_c analysis in appendix C itself can underestimate risk to the population within a flight corridor due to certain approximations, including the probability of impact in the cross-range direction (P_y), which uses Simpson's

approximation of the Elliptical Normal Probability Function. and the determination that the width of a flight corridor is assumed to represent a j-sigma normal distribution. Cities present in a flight corridor can also cause the risk to be underestimated because the appendix C method averages population over areas that may be as large as a 1° x 1" grid. Perhaps the most important factor in contributing to possible error is the fact that the proposed location review assumes a perfectly functioning flight termination system. Accordingly, the FAA has chosen a multiplier of two to balance its intent to only approve launch sites that are safe for the launches intended to be launched from the launch site, and to minimize the burden on applicants.

The FAA will not approve the proposed launch site location if the estimated expected casualty exceeds 30×10^{-6}. An applicant may either modify its proposal, or if the flight corridor used was generated by the method proposed in appendix A, use the typically less conservative but more accurate method proposed in appendix B to narrow the flight corridor and perform another appendix C overflight risk analysis. An applicant may employ specified variations to the analysis described above. Six variations are identified in appendix C. The first four variations permit an applicant to make conservative assumptions that would lead to an overestimation of the corridor E_C compared with the more detailed process described. Although appendix C's approach simplifies a typical launch safety analysis somewhat by providing conservative default parameters to use, it may also prove unnecessarily complex for applicants proposing launch sites with launch corridors encompassing extremely few people. For those situations, appendix C provides the option for an applicant to further simplify the estimation of casualty expectancy by making worst-case assumptions that would produce

a higher value of the corridor E_C compared with the analysis defined in appendix C. subparagraphs (c)(l)-(8). This may be particularly useful uhen an applicant believes E_C is well below the acceptable value."

These variations would allow an applicant to assume that P_x and P_y have a value of 1.0 for all populated areas, or combine populated areas into one or more larger populated areas and use the greatest population density of the component populated areas for the combined area or areas. An applicant may also assume P_y has a value of one for any given populated area, or, for any given P_x sector, assume P_y has a value of one and use a worst case population density for the sector. A P_x sector is an area spanning the width of a flight corridor and bounded by two time points on the trajectory IIP ground trace. All four of these reduce the number of calculations required for applicants with little population within a flight corridor.

Another option. permitted in appendix C, is for an applicant who would otherwise fail the baseline analysis to perform a more refined E_C analysis by negating the baseline approach's overestimation of the probability of impact in each populated area. If the flight corridor includes populated areas that are irregular in shape, the equations for probability of impact in appendix C may cause E_c to be overestimated. This is because the result of the P_i computation for each populated area represents the probability of impacting within a rectangular area that bounds the populated area. As shown in figure C-l in appendix C, the length of two sides of the rectangle would be $x_2 - x_1$, and the length of the other two sides would be $y_2 - y_1$. Populated areas used to support the appendix C analysis must be no bigger than a U.S. census block group for the first 100

[45] The purpose of the EC analysis as part of the launch site location review is not to determine a value of Ec but rather to confidently demonstrate that EC is less than the acceptable threshold value.

nautical miles from a launch point and no bigger than a 1 degree latitude x 1 degree longitude grid (1° x 1° grid) beyond 100 nautical miles downrange. Whether the populated area is a census block group. a 1" x 1° grid. or a land mass such as a small island. it will not likely be a rectangle. Even a 1° x 1" grid near the equator. which approximates a rectangle. will not line up with the trajectory ground trace. Thus. a portion of the P_i rectangle includes area outside the populated area being evaluated. The probability of impacting in the rectangle is higher than impacting just in the populated area being evaluated. The value of the probability of impact calculated in accordance with appendix C will thus likely be overestimated.

One approach permitted in appendix C is to divide any given populated area into smaller rectangles, determine P_i for each individual rectangle, and sum the individual impact probabilities to determine P_i for the entire populated area. A second approach permitted in appendix C is, for a given populated area, to use the ratio of the populated area to the area of the original P_i rectangle.

If the estimated expected casualty still exceeds $30x10^{-6}$, the FAA will not approve the proposed launch site location. In that event, the only remaining options for an applicant would be to rely on one of its potential customers obtaining a launch license for launch from the proposed site.

The FAA considered the option of increasing the accuracy of appendix C by employing a procedure that ensures individual populated areas have homogeneous population densities. The FAA considered this because the probability of impact equations in appendix C can cause the E_c for an individual populated area to be under-estimated when unequal population densities occur within the area. This can occur, for

example. when a populated area contains one or more densely populated cities interspersed with large land mass areas with rural population. The proposed E_c equation distributes the population evenly throughout the populated area. Accordingly. the E_c may be somewhat underestimated or over-estimated for portions of the populated area. The FAA considered requiring applicants to use smaller areas with homogeneous population densities in order to more accurately estimate the E_c, but chose not to because any error should be accounted for with the multiplier of two discussed above.

Appendix D

Appendix D contains the FAA's proposed method for determining the acceptability of the location of a launch site for launching unguided suborbital launch vehicles. Appendix D describes how to define an overflight exclusion zone and each impact dispersion area to be analyzed for risk for a representative launch vehicle. Proposed appendix D also describes how to estimate whether risk to the public, measured by expected casualty, falls within the FAA's threshold of acceptable risk. In short, the proposed approach requires an applicant to define an overflight exclusion zone around a launch point, determine the impact point for each spent stage and then define an impact dispersion area around each impact point. If populated areas are located in the impact dispersion areas and cannot be excluded by altering the launch azimuth, the FAA would require a risk analysis that demonstrates that risk to the public remains within acceptable levels.

As a first step, an applicant would select which launch points at the proposed launch site would be used for the launch of unguided suborbital launch vehicles. An applicant must also then select an existing launch vehicle, for which apogee data is

available, whose final stage apogee represents the maximum altitude of any intended unguided suborbital launch vehicle intended for launch from that launch point. The applicant would then plot the distance, which is referred to as the impact range, from the launch point to the nominal impact point on the azimuth for each stage. Employing the impact dispersion radius of each stage, the applicant would define an impact dispersion area around each nominal impact point.

The FAA's proposed methodology for its proposed impact dispersion area requirements is grounded in three assumptions which reflect current practice. For purposes of this location review, the FAA assumes that unguided suborbital launch vehicles are not equipped with a flight termination system, and that public risk criteria are accordingly met through the implementation of a wind weighting system, launch procedures and restrictions, and the proper selection of a launch azimuth and elevation angles.[46] These aspects are currently reflected in FAA guidelines and will be addressed

[46] The flight safety program of an unguided suborbital launch vehicle without a flight termination system typically takes place and is concluded prior to flight. A launch operator achieves flight safety by implementing a flight plan based on launch vehicle performance parameters, launch vehicle dispersion parameters and other sources of error, such as wind measurement errors. A launch operator will offset the effects of winds measured on the day of launch by adjusting the azimuth and elevation of the launch vehicle's launcher accordingly. The methodology for correcting for actual wind conditions on the day of launch is called wind weighting. The products of a wind weighting analysis determine launcher azimuth and elevation settings that correct for wind effects on an unguided launch vehicle.

During preflight planning a launch operator determines launch vehicle dispersion, which is the potential change in the location of impact, by modeling the known causes of systematic errors. Variations in thrust, stage weight, payload weight and stage ignition time may produce errors, and will typically be included in any error model. Thrust misalignment, and the misalignment of nozzles or fins must also be modeled because of their capacity to contribute to error. A model also incorporates the error created by separation of the launch vehicle from the launcher, and accounts for any errors in motor impulse, drag estimate and launcher setting. Most significantly, a model analyzes wind error. Wind error modeling accounts for the measurement errors in the measuring system employed and the time elapsed between the time of measurement and the time of launch. Once these elements have been determined, wind error will be incorporated into the model to obtain the predicted impact points and total launch vehicle dispersion.

Historically, one of three methods have been used to correct for actual wind conditions on the day of launch. Both NASA at Wallops Flight Facility and the US Army at White Sands Missile Range have developed and improved methods of predicting the wind effects over the years. The three wind weighting methods that have evolved include: (1) the manual method, (2) the Lewis method, and (3) the 5-Degree-Of-Freedom (DOF) method. The difference between the methods is one of complexity and accuracy. The

in its regulations for launches from non-federal launch sites. The cumulative launch experience in unguided suborbital launch vehicles demonstrates that risk to the public from launches of these vehicles is attributable to planned stage impact during a successful flight. Controlling these risks solely through measures implemented prior to flight rather than relying on active measures during flight. as is the case for a vehicle equipped with an FTS. has provided historically an acceptable approach to assuring protection of the public. Accordingly, the appendix D analysis should adequately address the genera1 suitability of each launch point for unguided suborbital launch vehicle launches up to the altitude proposed. Operational requirements imposed on a launch licensee through license conditions should adequately address risks posed by the actual launch of unguided suborbital launch vehicles.

The proposed location review for a launch point that will support unguided suborbital launch vehicles also assumes that intermediate and final stages impact the earth within five standard deviations 5^{σ} of each nominal, no wind, impact point. This means that an appendix D analysis does not account for failures outside of five standard deviations from each intended impact point.

It also means that an appendix D analysis does not simulate an actual launch in actual wind conditions. For actual launches, wind weighting can be used to obtain the

---

manual method is the least complex, but produces the largest error. The 5-DOF method is the most complex, produces the least error, and is currently employed by safety offices at Wallops Flight Facility and White Sands Missile Range.

Each of the wind weighting methods produce launch vehicle elevation and azimuth settings. Other launch factors that play a role, however, may be necessary to ensure the wind weighting solutions are within the assumptions made in the pre-flight dispersion analysis. These factors may include the required height and period of wind measurements, limitations on the maximum ballistic wind and wind variability at which launch would be permitted, and a determination regarding maximum launcher setting angles.

The FAA derived the methods for defining an impact dispersion area proposed in appendix D by assuming that a launch operator would use a 5-DOF method of wind weighting. This does not preclude an applicant for a launch license from using another wind weighting method to develop impact dispersion

nominal. no wind. impact point for the final stage only. In order to ensure that the launch meets E,. ship hit. and aircraft hit probabilities. launch operators compute the wind drifted impact points of all stages using the launcher settings determined through wind weighting so that intermediate stage impacts are determined prior to launch. Although appendix D does not address this fact directly, it does show that at least some launches can be conducted depending on the wind conditions.

Defining an Overflight Exclusion Zone and Impact Dispersion Areas

The areas an applicant will analyze for risk to the public posed by the launch of an unguided suborbital launch vehicle consist of an overflight exclusion zone and stage impact dispersion areas. Having selected a launch point and a launch vehicle for which empirical data is available, an applicant defines each zone and area using the methodology provided. An overflight exclusion zone shall consist of a circle with a radius of 1600 feet centered on a launch point. An overflight exclusion zone is the area which must be free of the public during a launch. Creation of each impact dispersion area involves several more steps. For each stage of the analyzed vehicle an applicant must identify the nominal stage impact point on the azimuth where the stage is supposed to land, and draw a circle around that point, using the range and bearing equations of appendix A or GIS software. That circle describes the impact dispersion area, and an applicant defines an impact dispersion area for each stage.

An applicant must at the outset provide the geodetic latitude and longitude of a launch point that it proposes to offer for launch, and select a flight azimuth. Once an applicant has selected a launch point location arid azimuth, the next step is to determine a

---

areas, but the FAA proposes to address such issues in a rulemaking concerning launch licensing requirements.

1600 foot radius overflight exclusion zone for that launch point. As with an overflight exclusion zone created pursuant to appendices A and B, an applicant must show that the public would be cleared from its overflight exclusion zone prior to launch. Although suborbital vehicles have a very low likelihood of failure. failure is more likely to occur in the early stages of the launch. Consequently, the FAA proposes to guard against that risk through requiring an applicant to show the ability to evacuate an overflight exclusion zone. As with the flight corridors of appendices A and B, the FAA proposes to base the size of the overflight exclusion zone on the maximum distance that debris is expected to travel from a launch point if a mishap were to occur very early in flight. The FAA has estimated the D_{max} for an unguided suborbital launch vehicle, and the result is 1600 feet. Accordingly, an applicant would define an appendix D overflight exclusion zone as a circle with a radius of 1600 feet.

Because an applicant must choose the maximum altitude anticipated of a suborbital launch vehicle for launch from its site, an applicant needs to acquire the apogee of each stage of a representative vehicle. An applicant need not possess full information regarding a specific representative launch vehicle. All that is necessary is the apogee of each stage. The apogee height must be obtained from an actual launch conducted at an 84° elevation angle. If needed, data is available from the FAA. The FAA has compiled apogee data from past launches from Wallops Flight Facility for a range of launch vehicles and payloads. This data will be provided to an applicant upon request and may be used to perform the analysis.

An applicant then defines impact dispersion areas for each stage's nominal impact point. Having selected a launch vehicle most representative of what the applicant intends

for launch from the proposed launch point. an applicant will use either its own empirical apogee data or data from one of the vehicles in the FAA's data base. Whether an applicant uses vehicle apogee data obtained from the FAA or from elsewhere, the applicant must employ the FAA's proposed range and dispersion factors to determine the location of each nominal impact point and the size of each impact dispersion area.

The FAA proposes a means of estimating the distances of both an impact range and an impact dispersion radius. Under proposed appendix D, an applicant would estimate the impact range and dispersion parameters by multiplying the apogee of a launch vehicle intended for the prospective launch site by the FAA's proposed factors. The FAA proposes impact range and impact dispersion factors. which it derived from launch vehicle pedigrees of sounding rockets used by NASA Wallops Flight Facility in its sounding rocket program."' The proposed factors provide estimators of staging data for an unguided vehicle launched at a standard launcher elevation, which is the angle between the launch vehicle's major axis (x) and the ground, of 84°. The appendix defines the relationship between the apogee of a launch vehicle stage, an impact range and a 5^{σ} dispersion radius of a stage. This relationship is expressed as two constants. which vary with the altitude of the apogee, an impact range factor and an impact dispersion factor.

To locate each nominal impact point, an applicant will calculate the impact range for the final stage and each intermediate stage. An impact range describes the distance between an applicant's proposed launch point and the nominal impact point of a stage, or, in other words. its estimated landing spot along the azimuth selected for analysis. For

this estimation. an applicant would employ the FAA's proposed impact range factors of 0.4 or 0.7 as multipliers for the apogee of the stage. If an apogee is less than 100 kilometers. the applicant shall employ 0.4 as the impact range factor for that stage. If the apogee of a stage is 100 kilometers or more, the applicant shall use 0.7 as a multiplier. In plotting the impact points on a map, an applicant shall employ the methods provided in appendix A.

An impact dispersion radius describes the impact dispersion area of a stage. The FAA proposes to rely on an estimated impact dispersion radius of five standard deviations 5σ because significant population, such as a densely populated city, in areas within distances up to 5σ of the impact point could cause significant public risk. An applicant shall obtain the radius of the impact dispersion area by multiplying the stage apogee by the FAA's proposed impact dispersion factor of 0.4 for an apogee less than 100 kilometers and of 0.7 for an apogee of 100 kilometers or more. The final stage would typically produce the largest impact dispersion area.

Once an applicant determines the impact dispersion radii, the applicant must plot each impact dispersion area on a map in accordance with the requirements of paragraph (b). This is shown in figure D-l. An applicant may then determine if flight azimuths exist which do not affect populated areas. If all potential flight azimuths contain impact dispersion areas which encompass populated areas, then the FAA would require an E_c estimation of risk.

---

[47] These vehicles include Nike Orion, Black Brant IX, Black Brant XI, and Black Brant XII. They are representative of the current launch vehicle inventory and should approximate any proposed new launch vehicle.

Public Risk E_c Estimation

The FAA will approve a launch point for suborbital launch vehicles if there exists a set of impact dispersion areas for a representative launch vehicle in which the sum of risk to the public does not exceed the FAA's acceptable risk threshold. An overflight exclusion zone must contain no people. If a populated area is present within the impact dispersion areas. the proposed rules require an applicant to estimate the risk to the public posed by possible stage impact. An applicant must then determine whether its estimated risk satisfies the FAA requirement of an E_c of no more than 30×10^{-6}. The E_c estimation is performed by computing the sum of the risk for the impact of each stage and accounting for each populated area located within a 5σ dispersion of an impact point. The equation used to accomplish this is the same as that used in the impact probability computation in appendix C. Unlike, however, the method in appendix C, which accounts for an impact due to a failure, the probability of a stage impact occurring is $P_s = 1 - P_f$, where P_s is the probability of success, and P_f is the probability of failure. The FAA proposes, for the purposes of the launch site location review, a constant of 0.98 for the probability of success for unguided suborbital launch vehicles. The probability of success is used in place of P_f in calculating both the cross-range and downrange probability of impact.

The proposed location review for launch points intended for the launch of unguided suborbital launch vehicles differs from the approach proposed for reviewing the location of launch points intended for the launch of guided orbital and suborbital launch vehicles. In analyzing whether risk remains at acceptable levels, E_c equations in appendix D rely on the probability of success rather than the probability of failure. The

use of stage impact probability. typified as the probability of success (P_s), for suborbital launch vehicles is necessary because stage impacts are high probability events which occur near the launch point with dispersions which may overlap or be adjacent to the launch point. The difference between the methods of appendices A. B and C and that proposed in appendix D reflects the fundamental differences between the likely dominant source of risk to the public from guided and unguided vehicles and the methods that have been developed for guarding public safety against the risks created by each type of vehicle. In other words, the methods for defining impact dispersion areas and for conducting an impact risk assessment for an unguided vehicle are premised on the risks posed by a successful flight, that is, the planned deposition of stages and debris. In contrast, the methodology for developing a flight corridor and associated risk methodology for guided vehicles assumes that the likely major source of risk to the public arises out of a failure of a mission and the ensuing destruction of the vehicle. Failures are less probable and debris impacts are spread throughout a flight trajectory.

The high degree of success recorded for unguided launch vehicles renders the probability of success the greater source of risk. Because of their relative simplicity of operation, the failure rate, over time, for unguided launch vehicles is between one and two percent. At this level of reliability, the FAA believes that its primary focus of concern for assessing the safety of a launch site should be the more likely event, namely, the public's exposure to the planned impact of vehicle stages and other vehicle components, such as fairings, rather than the risk posed by exposure to debris resulting from a failure. Success is the high risk event. Although failure rates are low for unguided launch vehicles, their spent stages have large impact dispersions. Moreover,

the FAA's proposed impact dispersion area estimations generally produce impact dispersion areas large enough to encompass most of the populations exposed to a possible failure as well as to a nominal flight, thus ensuring the inclusion of any large. densely populated area in the analysis. Thus, all but a small percentage of populated area will be analyzed to some extent, albeit using impact probabilities based on success. This fact plus a multiplier of five should provide a reasonable, conservative estimation of the risks associated with the launch point.

This is true of unguided sub-orbital launch vehicles because their impact dispersions are much larger than those for guided vehicles and they occur closer to the launch point.

In appendix D, the FAA assumes that the stage impact dispersion in both the downrange and cross range directions are equal. This is a valid assumption for suborbital launch vehicle rockets because their trajectories produce near circular dispersions. NASA data on sounding rocket impact dispersion supports this conclusion.

The impact dispersion area is based on a 5^{σ} dispersion. Appendix D uses the effective casualty area data, table D- 1, which contains information similar to appendix C, table C-3. This data represents the estimation of the area produced by both suborbital launch vehicle inert pieces. The baseline risk estimation approach in appendix D has the applicant calculate the probability of impact for each populated area, and then determining an E_c value for each populated area. To obtain the estimated E_c for an entire impact dispersion area, the applicant adds the E_c results for each populated area. If the population within the impact dispersion area is relatively small, an applicant may wish to conduct a less rigorous analysis by making conservative assumptions. Appendix D offers

the option of analyzing a worst-case impact dispersion area for those where such an approach might save time and analysis. similar to the approach in appendix C.

Paperwork Reduction Act

This proposal contains information collection requirements. As required by the Paperwork Reduction Act of 1995 (44 U.S.C. section 3507(d)). the Department of Transportation has submitted the information collection requirements associated with this proposal to the Office of Management and Budget for its review.

Title: Licensing and Safety Requirements for Operation of a Launch Site

The FAA is proposing to amend its commercial space transportation licensing regulations to add licensing and safety requirements for the operation of a launch site. In the past, commercial launches have occurred principally at federal launch ranges under safety procedures developed by federal launch range operators. To enable the development and use of launch sites that are not operated by a federal launch range, rules are needed to establish specific licensing and safety requirements for operating a launch site. whether that site is located on or off of a federal launch range. These proposed rules would provide licensed launch site operators with licensing and safety requirements to protect the public from the risks associated with activities at a launch site.

The required information will be used to determine whether applicants satisfy requirements for obtaining a license to protect the public from risks associated with operations at **a** launch site. The information to be collected includes data required for performing launch site location analyses. A launch site license is valid for a period of five years, and it is assumed that all licenses would be renewed after five years. The

frequency. of required submissions. therefore. will depend upon the number of prospective launch site operators seeking a license and the renewal of site licenses.

The respondents are all licensees authorized to conduct licensed launch site activities. It is estimated that there will be two respondents annually at 796 hours per respondent for an estimated annual burden hours of 1592 hours.

The agency is soliciting comments to (1) evaluate whether the proposed collection of information is necessary for the proper performance of the functions of the agency. including whether the information will have practical utility; (2) evaluate the accuracy of the agency's estimate of the burden; (3) enhance the quality, utility, and clarity of the information to be collected; and (4) minimize the burden of the collection of information on those who are to respond, including through the use of appropriate automated, electronic, mechanical, or other technological collection techniques or other forms of information technology (for example, permitting electronic submission of responses).

Individuals and organizations may submit comments on the information collection requirements by [insert date 60 days after publication in the Federal Register], and should direct them to the address listed in the **ADDRESSES** section of this document.

According to the regulations implementing the Paperwork Reduction Act of 1995, (5 CFR Part 1320.8(b)(2)(vi)), an agency may not conduct or sponsor, and a person is not required to respond to a collection of information unless it displays a currently valid OMB control number. The OMB control number for this information collection will be published in the Federal Register after it is approved by the Office of Management and Budget.

Regulatory Evaluation Summary

This section summarizes the full regulatory evaluation prepared by the FAA that provides more detailed estimates of the economic consequences of this regulatory action. This summary and the full evaluation quantify. to the extent practicable, estimated costs to the private sector, consumers, Federal. State and local governments. as well as anticipated benefits. This evaluation was conducted in accordance with Executive Order 12866. which directs that each Federal agency can propose or adopt a regulation only upon a reasoned determination that the benefits of the intended regulation justify the costs. This document also includes an initial regulatory flexibility determination, required by the Regulatory Flexibility Act of 1980, and an international trade impact assessment, required by the Office of Management and Budget. This proposal is not considered a significant regulatory action under section 3 (f) of Executive Order 12866. In addition, under Regulatory Policies and Procedures of the Department of Transportation (44 FR 11034; February 26, 1979), this proposal is considered significant because there is substantial public interest in the rulemaking.

The Federal Aviation Administration proposes to amend its commercial space licensing regulations to add licensing requirements for the operation of a launch site. The proposal would provide launch site operators with licensing and operating requirements to protect the public from the risks associated with operations at a launch site. The FAA currently issues licenses to launch site operators on a case-by case- approach. Elements of that approach are reflected in the guidelines, “Site Operators License Guidelines for Applicants,” which describe the information that applicants provide the FAA for a license to operate a launch site. The FAA’s interpretation and implementation of the guidelines

constitute another element of the case-by-case approach and additional

policy review. not reflected in the guidelines.

The proposal represents quantifiable changes in costs compared (current practice) in the following two areas. They are the launch site lc approval and the launch site operations review and approval. The FAA costs and cost savings of these changes under two different cost scenari period discounted at 7 percent in 1997 dollars. The total 1 O-year undisc is estimated to be between $84,000 and $160,000 (or between $53,000 discounted). The most burdensome cost scenario (where net cost savin industry would result in the costs to the launch site operators of $3,000 discounted) for the launch site location reviews and approval provisions of $11,000 (or $8,000, discounted) for the launch site operations review provisions. Although there would be no cost impact to the FAA, there savings to the FAA from the most burdensome cost scenario of $104,00 discounted.

There are significant nonquantifiable benefits in two areas. First, eliminates overlapping responsibilities. Second, the proposal provides inc and specificity, which are not present in the guidelines.

Regulatory Flexibility Determination

The Regulatory Flexibility Act of 1980 establishes "as a princi issuance that agencies shall endeavor, consistent with the objective of applicable statues, to fit regulatory and informational requirements to business, organizations, and governmental jurisdictions subject to regu

achieve that principal. the Act requires agencies to solicit and consider flexible regulator! proposals and to explain the rationale for their actions. The Act covers a wide-range of small entities. including small businesses, not-for-profit organizations and small governmental jurisdictions.

Agencies must perform a review to determine whether a proposed or final rule will have a significant economic impact on a substantial number of small entities. If the determination is that it will, the agency must prepare a regulatory flexibility analysis (RFA) as described in the Act. However, if an agency determines that a proposed or final rule is not expected to have a significant economic impact on a substantial number of small entities, section 605(b) of the 1980 act provides that the head of the agency must so certify and an RFA is not required. The certification must include a statement providing the factual basis for this determination, and the reasoning should be clear.

The FAA conducted the required review of this proposal and determined that it would not have a significant economic impact on a substantial number of small entities. Accordingly, pursuant to the regulatory Flexibility Act, 5 U.S.C. 605(b), the Federal Aviation Administration certifies that this rule will not have a significant economic impact on a substantial number of small entities.

Potentially Affected Entities

Entities who are licensed, or have begun the licensing process, were contacted to determine their size and to gain insight into the impacts of the proposed regulations on the licensing process. Spaceport Florida Authority (SFA), Spaceport Systems International, L.P. (SSI), the Virginia Commonwealth Space Flight Authority (VCSFA) and the Alaska Aerospace Development Corporation (AADC) are all licensed to operate

6-17-99

launch sites. The New Mexico Office of Space Commercialization (NMOSC) is mentioned briefly below although it is only in the pre-application consultation phase.

The Virginia Commonwealth Space Flight Authority (VCSFA) is a not-for-profit subdivision of the Commonwealth of Virginia, responsible for oversight of the activities of the Virginia Commercial Space Flight Center (VCSFC). The VCSFC is located within the boundaries of the Wallops Flight Facility (WFF). As a subdivision of the Commonwealth of Virginia, the VCSFA is empowered by the Acts of the General Assembly to do all things necessary to carry out its mission of stimulating economic growth and education through commercial aerospace activities.

The Spaceport Florida Authority (SFA) was created by Florida's Governor and Legislature as the nation's first state government space agency. The authority was established to develop space-related enterprise, including launch activities, industrial development and education-related projects. SFA operates Spaceport Florida (SPF), located on Cape Canaveral Air Station.

Launch site operator California Spaceport is located on Vandenberg Air Force Base. The launch site is operated and managed by Spaceport Systems International, L.P. who is in partnership with ITT Federal Services Corporation (ITT FSC). ITT FSC is one of the largest U.S.-based technical and support services contractors in the world.

The Kodiak Launch Complex is being built by the Alaska Aerospace Development Corporation. AADC is a public corporation created by the State of Alaska to develop aerospace related economic and technical opportunities for the state.

The Southwest Regional Spaceport (SRS) is to be operated by the New Mexico Office of Space Commercialization (NMOSC). The NMOSC is a division of the State's

New Mexico Economic Development Department. Commencement of space flight operations is not expected until early in the next decade.

Definition of Small Entities

The Small Business Administration has defined small business entities relating to space vehicles [SIC codes 3761, 3764 and 3769] as entities comprising fewer than 1000 employees. Although the above mentioned entities have fewer than 1000 employees in their immediate segment of the business, they are affiliated with/or funded by state governments and large parent companies. The VCSFA is a not-for-profit subdivision of the Commonwealth of Virginia; the SFA is a government space agency; the SSI is affiliated with ITT FSC; and AADC is a government sponsored corporation.

Under 5 U.S.C. 605, the FAA concludes that this proposal would impose little or no additional cost on this industry and certifies that it will not have a significant economic impact on a substantial number of small entities. The FAA nevertheless requests comments on any potential impacts associated with this proposal.

International Trade Impact Assessment

Licensing and Safety Requirements for Operation of a Launch Site (14 CFR Part 420) would not constitute a barrier to international trade, including the export of U.S. goods and services out of the United States. The proposal affects operation of launch sites that are currently located or being proposed within the United States or operated by U.S. citizens.

The proposal is not expected to affect trade opportunities for U.S. firms doing business overseas or for foreign firms doing business in the United States. The FAA requests information on the effect that this proposal would have on international trade.

Federalism Implications

The regulations proposed herein will not have substantial direct effects on the states. on the relationship between the national government and the states, or on the distribution of power and responsibilities among the various levels of government. Therefore, in accordance with Executive Order 126 12, it is determined that this proposal would not have sufficient federalism implications to warrant the preparation of a Federalism Assessment

Unfunded Mandates Reform Act Assessment

Title II of the Unfunded Mandates Reform Act of 1995 (UMRA), enacted as Pub. L. 104-4 on March 22, 1995, requires each Federal agency, to the extent permitted by law, to prepare a written assessment of the effects of any Federal mandate in a proposed or final agency rule that may result in the expenditure by State, local, and tribal governments, in the aggregate, or by the private sector, of $100 million or more (adjusted annually for inflation) in any one year. Section 204(a) of the UMRA, 2 U.S.C. 1534(a), requires the Federal agency to develop an effective process to permit timely input by elected officers (or their designees) of State, local, and tribal governments on a proposed "significant intergovernmental mandate." A "significant intergovernmental mandate" under the UMRA is any provision in a Federal agency regulation that will impose an enforceable duty upon State, local, and tribal governments, in the aggregate, of $100 million (adjusted annually for inflation) in any one year. Section 203 of the UMRA, 2 U.S.C. 1533, which supplements section 204(a), provides that before establishing any regulatory requirements that might significantly or uniquely affect small governments, the agency shall have developed a plan that, among other things, provides for notice to

potentially affected small governments. if any. and for a meaningful and timely opportunity to provide input in the development of regulatory proposals.

This proposal does not meet the cost thresholds described above. Furthermore. this proposal would not impose a significant cost or uniquely affect small governments. Therefore. the requirements of Title II of the Unfunded Mandates Reform Act of 1995 do not apply.

Environmental Assessment

FAA Order 1050.1 D defines FAA actions that may be categorically excluded from preparation of a National Environmental Policy Act (NEPA) environmental assessment (EA) or environmental impact statement (EIS). In accordance with FAA Order 1050.1 D, appendix 4, paragraph 4(i), regulatory documents which cover administrative or procedural requirements qualify for a categorical exclusion. Proposed sections in subpart B of part 420 would require an applicant to submit sufficient environmental information for the FAA to comply with NEPA and other applicable environmental laws and regulations during the processing of each license application. Accordingly, the FAA proposes that this rule qualifies for a categorical exclusion because no significant impacts to the environment are expected to result from finalization or implementation of its administrative provisions for licensing

Energy Impact

The energy impact of the rulemaking action has been assessed in accordance with the Energy Policy and Conservation Act (EPCA) and Public Law 94-163, as amended (42 U.S.C. 6362). It has been determined that it is not a major regulatory action under the provisions of the EPCA.

List of Subjects in 1-I CFR Part 417 and 120

Confidential business information. Environmental protection, Organization and functions. Reporting and recordkeeping requirements. Rockets, Space transportation and exploration

The Amendment

In consideration of the foregoing, the Federal Aviation Administration amends Chapter III of Title 14 of the Code of Federal Regulations to read as follows:

Part 417 [Removed and Reserved]

1. Part 4 17 is removed and reserved
2. Subchapter C of Chapter III, title 14, Code of Federal Regulations, is amended by adding a new part 420 to read as follows:

PART 420—LICENSE TO OPERATE A LAUNCH SITE

Subpart A-General

Sec.

420.1 Scope.

420.3 Applicability.

420.5 Definitions.

420.6-420.14 [Reserved]

Subpart B-Criteria & Information Requirements for Obtaining a License

420.15 Information requirements.

420.17 Bases for issuance of a license.

420.19 Launch site location review.

420.2 1 Launch site criteria for expendable launch vehicles.

420.23 Launch site location review for unproven launch vehicles.

420.31 Explosive site plan.

420.33 Handling of solid propellants.

420.35 Storage or handling of liquid propellants.

420.37 Solid and liquid propellants located together.

420.38-420.40 [Reserved]

Subpart C-License Terms and Conditions

420.41 License to operate a launch site-general.

420.43 Duration.

420.45 Transfer of a license to operate a launch site.

420.47 License modification.

420.49 Compliance monitoring.

Subpart D-Responsibilities of a Licensee

420.51 Responsibilities-general.

420.53 Control of public access.

420.55 Scheduling of launch site operations.

420.57 Notifications.

420.59 Launch site accident investigation plan.

420.61 Records.

420.63 Explosives.

APPENDIX A to PART 420—METHOD FOR DEFINING A FLIGHT CORRIDOR

APPENDIX B to PART 420—METHOD FOR DEFINING A FLIGHT CORRIDOR

APPENDIX C to PART 420—RISK ANALYSIS

APPENDIX D to PART 420—IMPACT DISPERSION AREAS AND CASUALTY EXPECTANCY ESTIMATE FOR UNGUIDED SUBORBITAL LAUNCH VEHICLES

APPENDIX E to PART 420—TABLES FOR EXPLOSIVE SITE PLAN

Authority: 49 U.S.C. 70101-70121.

Subpart A--General

§ 420.1 Scope.

This part prescribes the information and demonstrations that must be submitted as part of a license application, the bases for license approval, license terms and conditions, and post-licensing requirements with which a licensee shall comply to remain licensed. Requirements for preparing a license application are also contained in part 4 13 of this subchapter.

§ 420.3 Applicability.

This part applies to any person seeking a license to operate a launch site or to a person licensed under this part.

§ 120.5 Definitions.

For the purpose of this part,

Ballistic coefficient means the weight of an object divided by the quantity product of the coefficient of drag of the object and the area of the object.

Compatibility means the chemical property of materials that may be located together without increasing the probability of an accident or, for a given quantity, the magnitude of the effects of such an accident.

Debris dispersion radius (D_{max}) means the estimated maximum distance from a launch point that debris travels given a worst-case launch vehicle failure and flight termination at 10 seconds into flight.

Division 1.3 explosive means an explosive as defined in 49 CFR § 173.50.

Downrange area means a portion of a flight corridor beginning where a launch area ends and ending 5,000 nautical miles from the launch point for an orbital launch vehicle, and ending with an impact dispersion area for a guided sub-orbital launch vehicle.

E,F,G coordinate system means an orthogonal, Earth-fixed, geocentric, right-handed system. The origin of the coordinate system is at the center of an ellipsoidal earth model. The E-axis is positive directed through the Greenwich meridian. The F-axis is positive directed though 90 degrees east longitude. The EF-plane is coincident with the

ellipsoidal Earth model's equatorial plane. The G-axis is normal to the EF-plane and positive directed through the north pole.

E.N.U coordinate system means an orthogonal. Earth-fixed, topocentric, right-handed system. The origin of the coordinate system is at a launch point. The E-axis is positive directed east. The N-axis is positive directed north. The EN-plane is tangent to an ellipsoidal Earth model's surface at the origin and perpendicular to the geodetic vertical. The U-axis is normal to the EN-plane and positive directed away from the Earth.

Effective casualty area (A_c) means the aggregate casualty area of each piece of debris created by a launch vehicle failure at a particular point on its trajectory. The effective casualty area for each piece of debris is the area within which 100 percent of the unprotected population on the ground are assumed to be a casualty, and outside of which 100 percent of the population are assumed not to be a casualty. This area is based on the characteristics of the debris piece including its size, the path angle of its trajectory, impact explosions, the size of a person, and debris skip, splatter, and bounce.

Explosive means any chemical compound or mechanical mixture that, when subjected to heat, impact, friction, detonation or other suitable initiation, undergoes a rapid chemical change that releases large volumes of highly heated gases that exert pressure in the surrounding medium. The term applies to materials that either detonate or deflagrate.

Explosive equivalent means a measure of the blast effects from explosion of a given quantity of material expressed in terms of the weight of trinitrotoluene (TNT) that would produce the same blast effects when detonated.

Explosive hazard facility means a facility at a launch site where solid or liquid propellant is stored or handled.

Flight azimuth means the initial direction in which a launch vehicle flies relative to true north expressed in degrees-decimal-degrees.

Flight corridor means an area on the earth's surface estimated to contain the majority of hazardous debris from nominal and non-nominal flight of an orbital or guided suborbital launch vehicle.

Guided suborbital launch vehicle means a suborbital rocket that employs an active guidance system.

Impact dispersion area means an area representing an estimated five standard deviation dispersion about a nominal impact point of an intermediate or final stage of a suborbital launch vehicle.

Impact dispersion factor means a constant used to estimate, using a stage apogee. a five standard deviation dispersion about a nominal impact point of an intermediate or final stage of a suborbital launch vehicle.

Impact dispersion radius (R_i) means a radius that defines an impact dispersion area.

Impact range means the distance between a launch point and the impact point of a suborbital launch vehicle stage.

Impact range factor means a constant used to estimate, using the stage apogee, the nominal impact point of an intermediate or final stage of a suborbital launch vehicle.

Instantaneous impact point (IIP) means an impact point, following thrust termination of a launch vehicle, calculated in the absence of atmospheric drag effects.

Instantaneous impact point (IIP) range rate means a launch vehicle's estimated IIP velocity along the Earth's surface.

Intraline distance means the minimum distance permitted between any two explosive hazard facilities in the ownership, possession or control of one launch site customer.

Launch area means. for a flight corridor defined using appendix A to this part the portion of a flight corridor from the launch point to a point 100 nautical miles in the direction of the flight azimuth. For a flight corridor defined using appendix B to this part ~~a~~ launch area is the portion of a flight corridor from the launch point to the enveloping line enclosing the outer boundary of the last debri dispersion circle.

Launch point means a point on the Earth from which the flight of a launch vehicle begins, and is defined by its geodetic latitude, longitude and height on an ellipsoidal Earth model.

Launch site accident means an unplanned event occurring during a ground activity at a launch site resulting in a fatality or serious injury (as defined in 49 CFR § 830.2) to any person who is not associated with the activity, or any damage estimated to exceed $25,000 to property not associated with the activity.

Net explosive weight (NEW) means the total weight, expressed in pounds, of explosive material or explosive equivalency contained in an item.

Nominal means, in reference to launch vehicle performance, trajectory, or stage impact point, a launch vehicle flight where all launch vehicle aerodynamic parameters are as expected, all vehicle internal and external systems perform as planned, and there are no external perturbing influences (e.g., winds) other than atmospheric drag and gravity.

MM 6-17-99

Nominal trajectory means the position and velocity components of a nominally performing launch vehicle relative to an x,y,z coordinate system, expressed in x, y. z. $\dot{x}, \dot{y}, \dot{z}$.

Overflight dwell time means the period of time it takes for a launch vehicle's IIP to move past a populated area. For a given populated area, the overflight dwell time is the time period measured along the nominal trajectory IIP ground trace from the time point whose normal with the trajectory intersects the most uprange part of the populated area to the time point whose normal with the trajectory intersects the most downrange part of the populated area.

Overflight exclusion zone means a portion of a flight corridor which must remain clear of the public during the flight of a launch vehicle.

Populated area means a land area with population.

Population density means the number of people per unit area in a populated area

Position data means data referring to the current position of a launch vehicle with respect to flight time expressed through the x,y,z coordinate system.

Public area means any area outside a hazard area and is an area that is not in the possession, ownership or other control of a launch site operator or of a launch site customer who possesses, owns or otherwise controls that hazard area.

Public area distance means the minimum distance permitted between a public area and an explosive hazard facility.

Unguided sub-orbital launch vehicle means a sub-orbital rocket that does not have a guidance system.

x.y.z coordinate system means an orthogonal. Earth-fixed. topocentric. right-handed system. The origin of the coordinate system is at a launch point. The x-axis coincides with the initial launch azimuth and is positive in the downrange direction. The y-axis is positive to the left looking downrange. The xy-plane is tangent to the ellipsoidal earth model's surface at the origin and perpendicular to the geodetic vertical. The z-axis is normal to the xy-plane and positive directed away from the earth.

ϕ_0, λ_0, h_0 means a latitude, longitude, height system where ϕ_0 is the geodetic latitude of a launch point, λ_0 is the east longitude of the launch point, and h_0 is the height of the launch point above the reference ellipsoid. ϕ_0 and λ_0 are expressed in degrees-decimal-degrees.

§§ 420.6-420.14 [Reserved]

Subpart B — Criteria & Information Requirements for Obtaining a License

§ 420.15 Information requirements.

(a) An applicant shall provide the FAA with information for the FAA to analyze the environmental impacts associated with operation of a proposed launch site. The information provided by an applicant must be sufficient to enable the FAA to comply with the requirements of the National Environment Policy Act, 42 U.S.C. 432 1 et seq. (NEPA), the Council on Environmental Quality Regulations for Implementing the Procedural Provisions of NEPA, 40 CFR Parts 1500- 1508, and the FAA's Procedures for Considering Environmental Impacts, FAA Order 1050.1 D. An applicant shall submit environmental information concerning a proposed launch site not covered by existing environmental documentation and other factors as determined by the FAA.

(b) An applicant shall:

(1) Provide the information necessary to demonstrate compliance uith sections 420.19. 420.2 1. and 420.23. For launch sites analyzed for expendable launch vehicles. an applicant shall provide the following information:

(i) A map or maps showing the location of each launch point proposed. and the flight azimuth. overflight exclusion zone. flight corridor, and each impact dispersion area for each launch point;

(ii) Each launch vehicle type and any launch vehicle class proposed for each launch point;

(iii) Each month and any percent wind data used in the analysis;

(iv) Any launch vehicle apogee used in the analysis;

(v) If populated areas are located within an overflight exclusion zone, a demonstration that there are times when the public is not present or that the applicant has an agreement in place to evacuate the public from the overflight exclusion zone during a launch;

(vi) Each populated area located within a flight corridor or impact dispersion area;

(vii) The estimated casualty expectancy calculated for each populated area within a flight corridor or impact dispersion area; and

(viii) The estimated casualty expectancy for each flight corridor or set of impact dispersion areas.

(2) Identify foreign ownership of the applicant, as follows:

(i) For a sole proprietorship or partnership, all foreign owners or partners;

(ii) For a corporation, any foreign ownership interest of 10 percent or more; and

(iii) For a joint venture, association. or other entity, any foreign entities participating in the entity.

(3) Provide an explosive site plan in accordance with sections 420.31, 420.33, 420.35 and 420.37.

(c) An applicant shall provide the information necessary to demonstrate compliance with the requirements of sections 420.53, 420.55, 420.57, 420.59 and 420.63.

(d) An applicant who is proposing to locate a launch site at an existing launch point at a federal launch range is not required to comply with ~~sub~~paragraph (b)(1) of this section if a launch vehicle of the same type and class as proposed for the launch point has been safely launched from the launch point. An applicant who is proposing to locate a launch site at a federal launch range is not required to comply with ~~sub~~paragraph (b)(3) of this section.

§ 420.17 Bases for issuance of a license.

(a) The FAA will issue a license under this part when the FAA determines that:

(1) The application provides the information required under § 420.15;

(2) The National Environmental Policy Act review is completed;

(3) The launch site location meets the criteria provided in §§ 420.19, 420.21, and 420.23;

(4) The explosive site plan meets the criteria provided in sections 420.31, 420.33, 420.35 and 420.37;

(5) The application demonstrates that the applicant shall satisfy the requirements of subpart D of this part; and.

MM 6-17-98

(6) Issuing a license would not jeopardize foreign policy or national security interests of the United States.

(b) The FAA advises an applicant. in writing, of any issue arising during an application review that would lead to denial. The applicant may respond in writing, submit additional information. or revise its license application.

§ 420.19 Launch site location review.

(a) To gain approval for a launch site location, an applicant shall demonstrate that for at least one type of expendable launch vehicle - orbital, guided sub-orbital or unguided sub-orbital - or a reusable launch vehicle, a flight corridor or set of impact dispersion areas exists that does not exceed an estimated expected average number of 0.00003 casualties (E,) to the collective member of the public exposed to hazards from any one flight ($E, \leq 30 \times 10^{-6}$). For an orbital expendable launch vehicle, an applicant shall choose a weight class as defined in table 1.

(b) For a guided orbital or guided sub-orbital expendable launch vehicle, an applicant shall define a flight corridor using one of the methodologies provided in appendices A or B ~~of~~ to this part. If a defined flight corridor contains a populated area, the applicant shall use appendix C ~~of~~ to this part to estimate the casualty expectation associated with the flight corridor.

(c) For an unguided sub-orbital expendable launch vehicle, an applicant shall define impact dispersion areas as provided by appendix D ~~of~~ to this part. If a defined impact dispersion area contains any populated areas, the applicant shall use appendix D to this part to estimate the casualty expectation associated with the set of impact dispersion areas.

MM 1-99

(d) For a reusable launch vehicle. an applicant shall define a tlight corridor that the applicant estimates to contain the of hazardous debris from nominal and non-nominal flight of a reusable launch vehicle. If the defined flight corridor contains a populated area. the applicant shall estimate the casualty expectation associated with a reusable launch vehicle mission. An applicant shall demonstrate that the estimated expected average number of casualties (E,) to the collective member of the public exposed to hazards from any one mission is less than 0.00003. The FAA will evaluate the adequacy of the flight corridor and casualty expectancy analysis on a case-by-case basis.

§ 420.21 Launch site criteria for expendable launch vehicles.

(a) For each launch point proposed for expendable launch vehicles, an applicant shall use each type of expendable launch vehicle proposed to be launched from that launch point as the basis of its demonstration of compliance with the criteria provided in paragraph (b) of this section and for the analyses provided in appendices A through D ~~of~~ to this part.

(b) For each type of expendable launch vehicle selected under paragraph (a) of this section the distance from the proposed launch point to the launch site boundary must be at least as great as the minimum distance listed in table 2 for that type and any class of launch vehicle.

§ 420.23 Launch site location review for unproven launch vehicles.

The FAA will evaluate the adequacy of a launch site location for unproven launch vehicles including all new launch vehicles, whether expendable or reusable, on a case-by-case basis.

mm 6-17-99

Table 1 to § 420.21
Orbital Launch Vehicle Classes by Payload Weight (lbs)

Orbital Launch Vehicles				
100 nm Orbit	Small	Medium	Medium Large	Large
28 degrees inclination[1]	≤4400	>4400 to ≤11100	>11100 to ≤18500	>18500
90 degrees inclination[2]	≤3300	>3300 to ≤8400	>8400 to ≤15000	>15000

1. 28 degrees inclination orbit from a launch point at 28 degrees latitude.
2. 90 degrees inclination orbit.

Table 2 to § 420.21
Minimum Distance from Launch Point to Launch Site Boundary (feet)

Orbital Launch Vehicles				Suborbital launch vehicles	
Small	Medium	Medium Large	Large	Guided suborbital launch vehicle	Unguided suborbital launch vehicle
7300	9300	10600	13000	8000	1600

§ 420.31 Explosive site plan.

(a) An applicant shall submit an explosive site plan that establishes compliance with sections 420.33, 420.35, and 420.37. The explosive site plan shall include:

(1) A scaled map that shows the location of all proposed explosive hazard facilities at the proposed launch site and that shows actual and minimal allowable distances between each explosive hazard facility and all other explosive hazard facilities and each public area, including the launch site boundary;

(2) A listing of the maximum quantities of liquid and solid propellants to be located at each explosive hazard facility, including the class and division for each solid propellant and the hazard and compatibility group for each liquid propellant; and

(3) A description of each activity to be conducted in each explosive hazard facility.

(b) An applicant applying for a license to operate a launch site at a federal launch range need not submit an explosive site plan to the FAA.

§ 420.33 Handling of solid propellants.

(a) An applicant shall determine the total quantity of solid propellant explosives by class and division in each explosive hazard facility where solid propellants will be handled. The total quantity of explosives in an explosive hazard facility shall be measured as the net explosive weight (NEW) of the solid propellants. When division 1.1 explosives, designed to be installed on launch vehicles and designed not to detonate division 1.3 components, are located with division 1.3 explosives, the total quantity of explosives shall be the NEW of the division 1.3 components.

(b) An applicant shall separate each explosive hazard facility where solid propellants will be handled from all other explosive hazard facilities, each public area and the launch site boundary by a distance no less than those provided for each quantity in appendix E, table E-l. An applicant shall employ no less than the applicable public area distance to separate an explosive hazard facility from each public area and from the launch site boundary. An applicant shall employ no less than an intraline distance to separate an explosive hazard facility from all other explosive hazard facilities that will be used by a single customer. An applicant may use linear interpolation for NEW quantities

between table entries. For every explosive hazard facility where solid propellants in quantities greater than 1.000.000 pounds will be handled. an applicant shall separate the esplosive hazard facility from all other explosive hazard facilities, each public area and the launch site boundary in accordance with the minimum separation distances derived from the following relationships:

(1) For a public area distance:

$$D = 8\ W^{1/3}$$

where "D" equals the minimum separation distance in feet and

"W" equals the NEW of propellant.

(2) For an intraline distance:

$$D = 5\ W^{1/3}$$

where "D" equals the minimum separation distance in feet and

"W" equals the NEW of propellant.

(c) An applicant shall measure separation distance from the closest debris or explosive hazard source in an explosive hazard facility.

§ 420.35 Storage or handling of liquid propellants.

(a) For an explosive hazard facility where liquid propellants are handled or stored. an applicant shall determine the total quantity of liquid propellant and, if applicable pursuant to ~~subparagraph~~ (a) (3) of this ~~paragraph~~ section, the explosive equivalent of liquid propellant in each explosive hazard facility in accordance with the following:

(1) The quantity of liquid propellant in a tank, drum, cylinder, or other container is the net weight in pounds of the propellant in the container. The determination of quantity shall include 'any liquid propellant in associated piping to any

6/17/99

point where positive means are provided for interrupting the flow through the pipe. or interrupting a reaction in the pipe in the event of a mishap.

(2) Where two or more containers of compatible liquid propellants will be handled or stored together in an explosive hazard facility, the total quantity of propellant to determine the minimum separation distance between the explosive hazard facility and all other explosive hazard facilities and each public area shall be the total quantity of liquid propellant in all containers, unless:

(i) The containers are separated one from the other by the appropriate distance as provided in ~~subpar~~agraph (b)(2) of this section; or

(ii) The containers are subdivided by intervening barriers, such as diking, that prevent mixing.

(iii) If (i) or (ii) paragraph (a)(2)(ii) of this section apply, an applicant shall use the quantity of propellant requiring the greatest separation distance pursuant to paragraph (b) of this section to determine the minimum separation distance between the explosive hazard facility and all other explosive hazard facilities and each public area.

(3) Where two or more containers of incompatible liquid propellants will be handled or stored together in an explosive hazard facility, an applicant shall determine the explosive equivalent in pounds of the combined liquids, using the formulas provided in appendix E, table E-2, to determine the minimum separation distance between the explosive hazard facility and other explosive hazard facilities and public areas unless the containers are separated one from the other by the appropriate distance as determined in ~~subpar~~agraph (b)(3) of this section. An applicant shall then use the quantity of liquid propellant requiring the greatest separation distance to determine the minimum separation

6-17-98

distance between the explosive hazard facility and all other explosive hazard facilities and each public area.

(4) An applicant shall convert quantities of liquid propellants from gallons to pounds using the conversion factors provided in appendix E, table E-3 and the following equation:

Pounds of propellant = gallons x density of propellant (pounds per gallon).

(b) An applicant shall use appendix E, table E-3 to determine hazard and compatibility groups and shall separate liquid propellants from each other and from each public area using distances no less than those provided in appendix E, tables E-4 through E-7 in accordance with the following:

(1) An applicant shall measure minimum separation distances from the hazard source in an explosive hazard facility, such as a container, building, segment, or positive cutoff point in piping, closest to each explosive hazard facility.

(2) An applicant shall measure the minimum separation distance between compatible liquid propellants using the “intragroup and compatible” distance for the propellant quantity and hazard group that requires the greater distance prescribed by appendix E, tables E-4, E-5, and E-6.

(3) An applicant shall measure the minimum separation distance between liquid propellants of different compatibility groups using the “public area and incompatible” distance for the propellant quantity and hazard group that requires the greater distance provided in appendix E, tables E-4, E-5, and E-6, unless the propellants of different compatibility groups are subdivided by intervening barriers that prevent mixing. If such barriers are present, the minimum separation distance shall be the

"intragroup and compatible" distance for the propellant quantity and group that requires the greater distance provided in appendix E. tables E-4, E-5, and E-6.

(4) An applicant shall separate liquid propellants from each public area using a distance no less than the "public area and incompatible" distance provided in appendix E. tables E-4, E-5. and E-6.

(5) An applicant shall separate each explosive hazard facility that will contain liquid propellants where explosive equivalents apply pursuant to subparagraph (a)(3) of this section from all other explosive hazard facilities of a single customer using the intraline distance provided in appendix E, table E-7, and from each public area using the public area distance provided in appendix E, table E-7.

$420.37 Solid and liquid propellants located together.

An applicant proposing an explosive hazard facility where solid and liquid propellants are to be located together shall determine the minimum separation distances between the explosive hazard facility and other explosive hazard facilities and public areas in accordance with the following. An applicant shall determine the minimum separation distances between the explosive hazard facility and all other explosive hazard facilities and public areas required for the solid propellants in accordance with section 420.33. An applicant shall determine the minimum separation distances between the explosive hazard facility and all other explosive hazard facilities and public areas required for the liquid propellants in accordance with section 420.35. An applicant shall then apply the greater of the separation distances determined by the liquid propellant alone or the solid propellant alone.

§§ 420.38-420.40 [Reserved]

JM 6-17-98

Subpart C — License terms and conditions

§ 420.41 License to operate a launch site - general.

(a) A license to operate a launch site authorizes a licensee to operate a launch site in accordance with the representations contained in the licensee's application. with terms and conditions contained in any license order accompanying the license, subject to the licensee's compliance with 49 U.S.C. subtitle IX. ch. 701 and this chapter.

(b) A license to operate a launch site authorizes a licensee to offer its launch site to a launch operator for each launch point for the type and any class of launch vehicle identified in the license application and upon which the licensing determination is based.

(c) Issuance of a license to operate a launch site does not relieve a licensee of its obligation to comply with any other laws or regulations; nor does it confer any proprietary, property, or exclusive right in the use of airspace or outer space.

§ 420.43 Duration.

A license to operate a launch site remains in effect for five years from the date of issuance unless surrendered, suspended, or revoked before the expiration of the term and is renewable upon application by the licensee.

§ 420.45 Transfer of a license to operate a launch site.

(a) Only the FAA may transfer a license to operate a launch site.

(b) The FAA will transfer a license to an applicant who has submitted an application in accordance with 14 CFR part 4 13, satisfied the requirements of § 420.15, and obtained each approval required under § 420.17 for a license.

(c) The FAA may incorporate by reference any findings made part of the record to support a prior related licensing determination.

§ 420.47 License modification.

(a) Upon application or upon its own initiative, the FAA may modify a license to operate a launch site at any time by issuing a license order that adds, removes. or modifies a license term or condition to ensure compliance with the Act and the requirements of this chapter.

(b) After a license to operate a launch site has been issued, a licensee shall apply to the FAA for modification of its license if:

(1) The licensee proposes to operate the launch site in a manner that is not authorized by the license; or

(2) Any representation contained in the license application that is material to public health and safety or safety of property is no longer accurate and complete or does not reflect the licensee's actual operation of the launch site.

(c) An application to modify a license must meet the requirements of part 4 13 of this chapter. The licensee shall indicate any part of its license or license application that would be changed or affected by the proposed modification.

(d) The FAA will approve **a** request for modification that satisfies the requirements set forth in this part.

(e) Upon approval of a request for modification, the FAA will issue either a written approval to the licensee or a license order modifying the license if a term or condition of the license is changed, added, or deleted. **A** written approval has the full force and effect of **a** license order and is part of the licensing record.

§ 420.49 Compliance monitoring.

A licensee shall allow access by and cooperate with federal officers or employees or other individuals authorized by the FAA to observe any activities of the licensee, its customers. its contractors. or subcontractors, associated with licensed operation of the licensee's launch site.

Subpart D — Responsibilities of a Licensee.

§ 420.51 Responsibilities - general.

(a) A licensee shall operate its launch site in accordance with the representations in the application upon which the licensing determination is based.

(b) A licensee is responsible for compliance with 49 U.S.C. Subtitle IX, ch. 701 and for meeting the requirements of this chapter.

§ 420.53 Control of public access.

(a) A licensee shall prevent unauthorized access to the launch site, and unauthorized, unescorted access to explosive hazard facilities or other hazard areas not otherwise controlled by a launch operator, through the use of security personnel, surveillance systems, physical barriers, or other means approved as part of the licensing process.

(b) A licensee shall notify anyone entering the launch site of safety rules and emergency and evacuation procedures prior to that person's entry unless that person has received **a** briefing on those rules and procedures within the previous year.

(c) A licensee shall employ warning signals or alarms to notify any persons at the launch site of any emergency.

§ 420.55 Scheduling of launch site operations.

(a) A licensee shall develop and implement procedures to schedule operations to ensure that each operation carried out by a customer. including a launch operator, at the launch site does not create the potential for a mishap that could result in harm to the public because of the proximity of the operations. in time or place, to operations of any other customer at the launch site.

(b) A licensee shall provide its launch site scheduling requirements to each customer before the customer begins operations at the launch site.

§ 420.57 Notifications.

(a) A licensee shall notify a launch operator of any limitations on the operations conducted at the launch site that arise out of its license to operate a launch site.

(b) A licensee shall complete an agreement with the local U.S. Coast Guard district to establish procedures for the issuance of a Notice to Mariners prior to a launch and other such measures as the Coast Guard deems necessary to protect public health and safety.

(c) **A** licensee shall complete an agreement with the FAA regional office having jurisdiction over the airspace through which launches will take place, to establish procedures for the issuance of a Notice to Airmen prior to a launch and for closing of air routes during the launch window and other such measures as the FAA regional office deems necessary to protect public health and safety.

(d) At least two days prior to flight of a launch vehicle, the licensee shall notify local officials and all owners of land adjacent to the launch site of the flight schedule.

§ 420.59 Launch site accident investigation plan.

General

(a) A licensee shall develop and implement a launch site accident investigation plan that contains the licensee's procedures for reporting. responding to. and investigating launch site accidents, as defined in § 420.5 ~~of this part~~. The launch site accident investigation plan must be signed by an individual authorized to sign and certify the application in accordance with § 413.7(c) of this chapter.

(b) Reporting requirements. A launch site accident investigation plan shall provide for -

(1) Immediate notification to the Federal Aviation Administration (FAA) Washington Operations Center in the event of a launch site accident.

(2) Submission of a written preliminary report to the FAA, Associate Administrator for Commercial Space Transportation, within five days of any launch site accident. The report must include the following information:

(i) Date and time of occurrence;

(ii) Location of the event;

(iii) Description of the event;

(iv) Number of injuries, if any, and general description of types of injury suffered;

(v) Property damage, if any, and an estimate of its value;

(vi) Identification of hazardous materials, as defined in $401.5 of this chapter. involved in the event;

(vii) Any action taken to contain the consequences of the event; and

(viii) Weather conditions at the time of the event.

mm 6-17-99

(c) Response plan. A launch site accident investigation plan shall contain procedures that -

(1) Ensure the consequences of a launch site accident are contained and minimized:

(2) Ensure data and physical evidence are preserved;

(3) Require the licensee to report to and cooperate with FAA or National Transportation Safety Board (NTSB) investigations and designate one or more points of contact for the FAA or NTSB; and

(4) Require the licensee to identify and adopt preventive measures for avoiding recurrence of the event.

(d) Investigation plan. A launch site accident investigation plan shall contain—

(1) Procedures for investigating the cause of a launch site accident, and participating in an investigation of a launch accident for launches launched from the launch site;

(2) Procedures for reporting launch site accident investigation results to the FAA; and

(3) Delineated responsibilities, including reporting responsibilities for personnel assigned to conduct investigations and for any one retained by the licensee to conduct or participate in investigations.

Applicability of other accident investigation procedures.

(e) Accident investigation procedures developed under 29 CFR 1910.119 and 40 CFR part 68 will satisfy the requirements of paragraphs (c) and (d) of this section to the extent that they include the elements provided in paragraphs (c) and (d) of this section.

MM 6-17-99

§ 120.61 Records.

(a) A licensee shall maintain all records, data. and other material needed to verify that its operations are conducted in accordance with representations contained in the licensee's application. A licensee shall retain records for three years.

(b) In the event of a launch or launch site accident, a licensee shall preserve all records related to the event. Records shall be retained until completion of any federal investigation and the FAA advises the licensee that the records need not be retained.

(c) A licensee shall make available to federal officials for inspection and copying all records required to be maintained under the regulations.

§ 420.63 Explosives.

Explosive siting.

(a) A licensee shall ensure that the configuration of the launch site is in accordance with the licensee's explosive site plan, and that the licensee's explosive site plan is in compliance with the requirements in §§ 420.3 1 - 420.37.

(b) Lightning protection. A licensee shall ensure that the public is not exposed to hazards due to the initiation of explosives by lightning.

Elements of a lightening protc & s + - - - -

(1) Unless an explosive hazard facility meets the conditions of paragraph (h)(3) of this ~~paragraph~~ section, all explosive hazard facilities shall have a lightning protection system to ensure explosives are not initiated by lightning. A lightning protection system shall meet the requirements of ~~sub~~paragraph (b)(2) of this section and include the following:

(i) Air terminal. An air terminal to intentionally attract a lightning strike.

(ii) Down conductor. A low impedance path connecting an air terminal to an earth electrode system.

(iii) Earth electrode system. An earth electrode system to dissipate the current

mm 6-17-99

from a lightning strike to ground.

(3) Bonding and surge protection.

(i) Bonding. All metallic bodies shall be bonded to ensure that voltage potentials due to lightning are equal everywhere in the explosive hazard facility. Any fence within six feet of a lightning protection system shall have a bond across each gate and other discontinuations and shall be bonded to the lightning protection system. Railroad tracks that run within six feet of the lightning protection system shall be bonded to the lightning protection system.

(ii) Surge protection. A lightning protection system shall include surge protection to reduce transient voltages due to lightning to a harmless level for all metallic power, communication, and instrumentation lines coming into an explosive hazard facility.

(3) Circumstances where no lightning protection system is required. No lightning protection system is required for (i) an explosive hazard facility when a lightning warning system is available to permit termination of operations and withdrawal of the public to public area distance prior to an electrical storm, or for (ii) an explosive hazard facility containing explosives that cannot be initiated by lightning. If no lightning protection system is required, a licensee must ensure the withdrawal of the public to a public area distance prior to an electrical storm.

(4) Testing and inspection. Lightning protection systems shall be visually inspected semiannually and shall be tested once each year for electrical continuity and adequacy of grounding. A licensee shall maintain at the explosive hazard facility a record of results obtained from the tests, including any action taken to correct deficiencies noted.

MM 6-17-98

(c) Electrical Power Lines. A licensee shall ensure that electric power lines at its launch site meet the following requirements:

(1) Electric power lines shall be no closer to an explosive hazard facility than the length of the lines between the poles or towers that support the lines unless an effective means is provided to ensure that energized lines cannot. on breaking, come in contact with the explosive hazard facility.

(2) Towers or poles supporting electrical distribution lines that carry between 15 and 69 KV, and unmanned electrical substations shall be no closer to an explosive hazard facility than the public area distance for that explosive hazard facility.

(3) Towers or poles supporting electrical transmission lines that carry 69 KV or more, shall be no closer to an explosive hazard facility than the public area distance for that explosive hazard facility.

Issued in Washington, DC on June 10, 1999

Patricia G. Smith
Associate Administrator for Commercial Space Transportation

Appendix A to Part 420
Method for Defining a Flight Corridor

(a) Introduction

(1) This appendix provides a method to construct a flight corridor from a launch point for a guided suborbital launch vehicle or any one of the four classes of guided orbital launch vehicles from table 1. § 420.2 1. without the use of local meteorological data or a launch vehicle trajectory.

(2) A flight corridor includes an overflight exclusion zone in a launch area and, for a guided suborbital launch vehicle, an impact dispersion area in a downrange area. A flight corridor for a guided suborbital launch vehicle ends with the impact dispersion area, and, for the four classes of guided orbital launch vehicles, 5,000 nautical miles from the launch point.

(b) Data requirements

(1) Maps. An applicant shall use any map for the launch site region with a scale not less than 1:250,000 inches per inch in the launch area and 1:20,000,000 inches per inch in the downrange area. As described in paragraph (b)(2), an applicant shall use a mechanical method, a semi-automated method, or a fully-automated method to plot a flight corridor on maps. A source for paper maps acceptable to the FAA is the U.S. Dept. of Commerce, National Oceanic and Atmospheric Administration, National Ocean Service.

(i) Projections for mechanical plotting method. An applicant shall use a conic projection. The FAA will accept a “Lambert-Conformal” conic projection. A polar aspect of a plane-azimuthal projection may also be used for far northern launch sites.

(ii) Projections for semi-automated plotting method. An applicant shall use cylindrical, conic. or plane projections for semi-automated plotting. The FAA will accept “Mercator” and “Oblique Mercator” cylindrical projections. The FAA will accept “Lambert-Conformal” and “Albers Equal-Area” conic projections. The FAA will accept "Lambert Azimuthal Equal-Area” and “Azimuthal Equidistant” plane projections.

(iii) Projections for fully-automated plotting method. The FAA will accept map projections used by geographical information system software scaleable pursuant to the requirements of paragraph (b)(1).

(2) Plotting Methods.

(i) Mechanical method. An applicant may use mechanical drafting equipment such as pencil, straight edge, ruler, protractor, and compass to plot the location of a flight corridor on a map. The FAA will accept straight lines for distances less than or equal to 7.5 times the map scale on map scales greater than or equal to 1: 1 ,000,000 inches per inch (in/in); or straight lines representing 100 nm or less on map scales less than 1: 1 ,OOO,OOO in/in.

(ii) Semi-Automated method. An applicant may employ the range and bearing techniques in paragraph (b)(3) to create latitude and longitude points on a map. The FAA will accept straight lines for distances less than or equal to 7.5 times the map scale on map scales greater than or equal to 1: 1 .OOO,OOO inches per inch (in/in): or straight lines representing 100 nm or less on map scales less than 1: 1 ,OOO.OOO in/in.

(iii) Fully-Automated method. An applicant may use geographical information system software with global mapping data scaleable in accordance with paragraph (b)(1).

(3) Range and bearing computations on an ellipsoidal earth model.

(i) To create latitude and longitude pairs on an ellipsoidal earth model, an applicant shall use the following equations to calculate geodetic latitude (+N) and longitude (+E) given the launch point geodetic latitude (+N), longitude (+E), range (nm), and bearing (degrees, positive clockwise from North).

(A) Input. An applicant shall use the following input in making range and bearing computations:

ϕ_1 = Geodetic latitude of launch point (DDD)

λ_1 = Longitude of launch point (DDD)

S = Range from launch point (nm)

α_{12} = Azimuth bearing from launch point (deg)

(B) Computations. An applicant shall use the following equations to determine the latitude (ϕ_2) and longitude (λ_2) of a target point situated "S" nm from the launch point on an azimuth bearing α_{12} degrees.

$$f = 1 - \frac{b}{a} \qquad \text{(Equation A 1)}$$

where:

a = WGS - 84 semi - major axis (3443.91846652 nmi)

b = WGS - 84 semi - minor axis (3432.37165994 nmi)

$$\varepsilon^2 = \frac{(a^2 - b^2)}{b^2} \qquad \text{(Equation A2)}$$

$$\theta = \frac{S}{b} \text{ (radians)} \qquad \text{(Equation A3)}$$

$$\beta_1 = \tan^{-1}\left[\frac{(b \cdot \sin\phi_1)}{(a \cdot \cos\phi_1)}\right] \qquad \text{(Equation A4)}$$

$$g = (\cos\beta_1)(\cos\alpha_{12})$$ (Equation A5)

$$h = (\cos\beta_1)(\sin\alpha_{12})$$ (Equation A6)

$$m = \frac{\left[1+\left(\frac{\varepsilon^2}{2}\right)\sin^2\beta_1\right]\left[1-h^2\right]}{2}$$ (Equation A7)

$$n = \frac{\left[1+\left(\frac{\varepsilon^2}{2}\right)\sin^2\beta_1\right]\left[(\sin^2\beta_1)(\cos\theta)+g\cdot(\sin\beta_1)(\sin\theta)\right]}{2}$$ (Equation A8)

$$L = h\cdot\left[-f\cdot\theta+3\cdot f^2\cdot n\cdot\sin\theta+\frac{3\cdot f^2\cdot m\cdot(\theta-\sin\theta\cdot\cos\theta)}{2}\right]$$ (radians) (Equation A9)

$$M = m\cdot\varepsilon^2$$ (Equation A10)

$$N = n\cdot\varepsilon^2$$ (Equation Al 1)

$$A_1 = N\cdot\sin\theta$$ (Equation A 12)

$$A_2 = \left(\frac{M}{2}\right)(\sin\theta\cdot\cos\theta-\theta)$$ (Equation A 13)

$$A_3 = \frac{5}{02}\left(N^2\cdot\sin\theta\cdot\cos\theta\right)$$ (Equation A 14)

$$A_4 = \left(\frac{M^2}{16}\right)\left(11\cdot\theta-13\cdot\sin\theta\cdot\cos\theta-8\cdot\theta\cdot\cos^2\theta+10\cdot\sin\theta\cdot\cos^3\theta\right)$$

(Equation A 15)

$$A_5 = \left(\frac{M\cdot N}{2}\right)\left(3\cdot\sin\theta+2\cdot\theta\cdot\cos\theta-5\cdot\sin\theta\cdot\cos^2\theta\right)$$ (Equation A 16)

$$\delta = \theta - A_1 + A_2 + A_3 + A_4 + A_5$$ (radians) (Equation A 17)

$$\sin\beta_2 = \sin\beta_1\cdot\cos\delta + g\cdot\sin\delta$$ (Equation A 18)

$$\cos\beta_2 = \left[h^2+(g\cdot\cos\delta-\sin\beta_1\cdot\sin\delta)^2\right]^{\frac{1}{2}}$$ (Equation A 19)

$$\phi_2 = \left\{ \tan^{-1}\left[\frac{(a \cdot \sin\beta_2)}{(b \cdot \cos\beta_2)} \right] \right\} \cdot \left(\frac{180}{\pi} \right) \text{ (geodetic latitude of target point, DDD)}$$

(Equation A20)

$$A = \tan^{-1}\left[\frac{(\sin\delta \,.\, \sin a_{12})}{(\cos\beta_1 \cdot \cos\delta - \sin\beta_1 \cdot \sin\delta \cdot \cos\alpha_{12})} \right]$$ (Equation A2 1)

$$\lambda_2 = (\lambda_1 + \Lambda + L)\left(\frac{180}{\pi} \right) \text{ (longitude of target point, DDD)}$$ (Equation A22)

(ii) To create latitude and longitude pairs on an ellipsoidal earth model, an applicant shall use the following equations to calculate the distance (S) of the geodesic between two points (P_1 and P_2), the forward azimuth (α_{12}) of the geodesic at P_1, and the back azimuth (α_{21}) of the geodesic at P_2, given the geodetic latitude (+N), longitude (+E) of P_1 and P_2. Azimuth is measured positively clockwise from North.

(A) Input. An applicant shall use the following input:

ϕ_1 = Geodetic latitude of point P_1 (DDD)

λ_1 = Longitude of point P_1 (DDD)

ϕ_2 = Geodetic latitude of point P_2 (DDD)

λ_2 = Longitude of point P_2 (DDD)

(B) Computations. An applicant shall use the following equations to determine the distance (S), the forward azimuth (α_{12}) of the geodesic at P_1, and the back azimuth (α_{21}) of the geodesic at P_2.

$$f = 1 - \frac{b}{a}$$ (Equation A23)

where:

a = WGS - 84 semi - major axis (3443.91846652 nrni)

b = WGS - 84 semi - minor axis (3432.37165994 nmi)

$$L = \lambda_2 - \lambda_1$$ (Equation A24)

$$\beta_1 = \tan^{-1}\left[\frac{(b \cdot \sin\phi_1)}{a \cdot \cos\phi_1} \right]$$ (Equation A25)

$$\beta_2 = \tan^{-1}\left[\frac{(b \cdot \sin\phi_2)}{a \cdot \cos\phi_2}\right]$$ (Equation A26)

$$A = \sin\beta_1 \cdot \sin\beta_2$$ (Equation A27)

$$B = \cos\beta_1 \cdot \cos\beta_2$$ (Equation A28)

$$\cos\delta = A + B \cdot \cos L$$ (Equation A29)

$$n = \frac{(a-b)}{(a+b)}$$ (Equation A30)

$$(\beta_2 - \beta_1) = (\phi_2 - \phi_1) + 2 \cdot \left[A \cdot (n + n^2 + n^3) - B \cdot (n + n^2 + n^3)\right] \cdot \sin(\phi_2 - \phi_1) \text{ radians}$$

(Equation A3 1)

$$\sin\delta = \left\{\begin{array}{l}(\sin L \cdot \cos\beta_2)^2 + \\ \left[\sin(\beta_2 - \beta_1) + 2 \cdot \cos\beta_2 \cdot \sin\beta_1 \cdot \sin^2(L/2)\right]^2\end{array}\right\}^{\frac{1}{2}}$$ (Equation A32)

$$\delta = \tan^{-1}\left(\frac{\sin\delta}{\cos\delta}\right) \text{ evaluated in positive radians} \leq \pi$$ (Equation A33)

$$c - \frac{B \cdot \sin L}{\sin 6}$$ (Equation A34)

$$m = 1 - c^2$$ (Equation A35)

$$S = b \cdot \left\{\begin{array}{l}\delta \cdot \left[1 + f + f^2\right] + A \cdot \left[(f + f^2) \cdot \sin\delta - (f^2 \cdot \delta^2)/(2 \cdot \sin\delta)\right] \\ -(m/2)\left[(f + f^2)(\delta + \sin\delta \cdot \cos\delta) - (f^2 \cdot \delta^2)/(\tan\delta)\right] \\ -(A^2 \cdot f^2/2) \cdot \sin\delta \cdot \cos\delta \\ +(f^2 \cdot m^2/16)\left[\delta + \sin\delta \cdot \cos\delta - 2 \cdot \sin\delta \cdot \cos^3\delta - 8\delta^2/(\tan\delta)\right] \\ +(A^2 \cdot m \cdot f^2/2)\left[\sin\delta \cdot \cos^2\delta + \delta^2/(\sin\delta)\right]\end{array}\right\}$$

in the same units as “a” and " b"

(Equation A36)

$$\Lambda = L + c \cdot \left\{ \begin{array}{l} \delta \cdot \left(f + f^2\right) - \left(A \cdot f^2/2\right)\left[\sin\delta + 2\delta^2/(\sin\delta)\right] \\ + \left(m \cdot f^2/4\right)\left[\sin\delta\cos\delta - 5\delta + 4\delta^2/(\tan\delta)\right] \end{array} \right\} \text{ radians (Equation A3 7)}$$

$$\alpha_{12} = \tan^{-1}\left\{ \frac{\left(\cos\beta_2 \cdot \sin A\right)}{\left[\sin\left(\beta_2 - \beta_1\right) + 2 \cdot \cos\beta_2 \cdot \sin\beta_1 \cdot \sin^2\left(\Lambda/2\right)\right]} \right\} \cdot \left(\frac{180}{\pi}\right) \text{ degrees}$$

(Equation A3 8)

$$a_{21} = \tan^{-1}\left\{ \frac{\left(-\cos\beta_1 \cdot \sin A\right)}{\left[2 \cdot \cos\beta_1 \cdot \sin\beta_2 \cdot \sin^2\left(\Lambda/2\right) - \sin\left(\beta_2 - \beta_1\right)\right]} \right\} \cdot \left(\frac{180}{\pi}\right) \text{ degrees}$$

(Equation A39)

(c) Creation of a flight corridor

(1) To define a flight corridor, an applicant shall:

(i) Select a guided suborbital or orbital launch vehicle, and, for an orbital launch vehicle, select from table 1 in § 420.21 a launch vehicle class that best represents the type of launch vehicle the applicant plans to support at its launch point;

(ii) Select a debris dispersion radius (D_{max}) from table A-l corresponding to the guided suborbital launch vehicle or orbital launch vehicle class selected in paragraph (c)(l)(i);

(iii) Select a launch point geodetic latitude and longitude; and

(iv) Select a flight azimuth.

(2) An applicant shall define and map an overflight exclusion zone using the following method:

(i) Select a debris dispersion radius (D_{max}) from table A-l and a downrange distance (D_{OEZ}) from table A-2 to define an overflight exclusion zone for the guided suborbital launch vehicle or orbital launch vehicle class selected in paragraph (c)(l)(i).

(ii) An overflight exclusion zone is described by the intersection of the following boundaries, which are depicted in figure A- 1:

(A) An applicant shall define an uprange boundary with a half-circle arc of radius D_{max} and a chord of length twice D_{max} connecting the half-circle arc endpoints. The uprange boundary placement on a map has the chord midpoint positioned on the launch point with the chord oriented along an azimuth $\pm 90^\circ$ from the launch azimuth and the half-circle arc located uprange from the launch point.

(B) An applicant shall define the downrange boundary with a half-circle arc of radius D_{max} and a chord of length twice D_{max} connecting the half-circle arc endpoints. The downrange boundary placement on a map has the chord midpoint intersecting the nominal flight azimuth line at a distance D_{OEZ} inches downrange with the chord oriented along an azimuth $\pm 90^{\circ}$ from the launch azimuth and the half-circle arc located downrange from the intersection of the chord and the flight azimuth line.

(C) Crossrange boundaries of an overflight exclusion zone are defined by two lines segments. Each is parallel to the flight azimuth with one to the left side and one to the right side of the flight azimuth line. Each line connects an uprange half-circle arc endpoint to a downrange half-circle arc endpoint as shown in figure A-l.

(iii) An applicant shall identify the overflight exclusion zone on a map meeting the requirements specified in paragraph (b).

(3) An applicant shall define and map a flight corridor using the following method:

(i) In accordance with paragraph (b), an applicant shall draw a flight corridor on a map(s) with the D_{max} origin centered on the intended launch point and the flight corridor centerline (in the downrange direction) aligned with the initial flight azimuth. The flight corridor is depicted in figure A-2 and its line segment lengths are tabulated in table A-3.

(ii) An applicant shall define the flight corridor using the following boundary definitions:

(A) An applicant shall draw an uprange boundary, which is defined by an arc-line GB (figure A-2), directly uprange from and centered on the intended launch point with radius D_{max}.

(B) An applicant shall draw line CF perpendicular to and centered on the flight azimuth line, and positioned 10 nm downrange from the launch point. The applicant shall use the length of line CF provided in table A-3 corresponding to the guided suborbital launch vehicle or orbital launch vehicle class selected in paragraph (c)(l)(i).

(C) An applicant shall draw line DE perpendicular to and centered on the flight azimuth line, and positioned 100 nm downrange from the launch point. The applicant shall use the length of line DE provided in table A-3 corresponding to the guided suborbital launch vehicle or orbital launch vehicle class selected in paragraph (c)(l)(i).

(D) Except for a guided suborbital launch vehicle, an applicant shall draw a downrange boundary, which is defined by line HI and is drawn perpendicular to and centered on the flight azimuth line, and positioned 5,000 nm downrange from the launch point. The applicant shall use the length of line HI provided in table A-3 corresponding to the orbital launch vehicle class selected in paragraph (c)(l)(i).

(E) An applicant shall draw crossrange boundaries, which are defined by three lines on the left side and three lines on the right side of the flight azimuth. An applicant shall construct the left flight corridor boundary according to the following, and as depicted in figure A-3 :

(I) The first line (line BC in figure A-3) is tangent to the uprange boundary arc. and ends at endpoint C of line CF. as depicted in figure A-3;

(2) The second line (line CD in figure A-3) begins at endpoint C of line BC and ends at endpoint D of line DH. as depicted in figure A-3;

(3) For all orbital launch vehicles. the third line (line DH in figure A-3) begins at endpoint D of line CD and ends at endpoint H of line HI, as depicted in figure A-3; and

(4) For a guided suborbital launch vehicle, the line DH begins at endpoint D of line CD and ends at a point tangent to the impact dispersion area drawn in accordance with paragraph (c)(4) and as depicted in figure A-4.

(F) An applicant shall repeat the procedure in paragraph (c)(3)(ii)(E) for the right side boundary.

(iii) An applicant shall identify the flight corridor on a map meeting the requirements specified in paragraph (b).

(4) For a guided suborbital launch vehicle, an applicant shall define a final stage impact dispersion area as part of the flight corridor and show the impact dispersion area on a map, as depicted in figure A-4, in accordance with the following:

(i) An applicant shall select an apogee altitude (H_{ap}) for the launch vehicle final stage. The apogee altitude should equal the highest altitude intended to be reached by a guided suborbital launch vehicle launched from the launch point.

(ii) An applicant shall define the impact dispersion area by using an impact range factor [$IP(H_{ap})$] and a dispersion factor [$DISP(H_{ap})$] as shown below:

(A) An applicant shall calculate the impact range (D) for the final launch vehicle stage. An applicant shall set D equal to the maximum apogee altitude (H_{ap}) multiplied by the impact range factor as shown below:

$$D = H_{ap} \cdot IP\left(H_{ap}\right) \qquad \text{(Equation A40)}$$

where: $IP(H_{ap})$ = 0.4 for an apogee less than 100 km; and
$IP(H_{ap})$ = 0.7 for an apogee 100 km or greater.

(B) An applicant shall calculate the impact dispersion radius (R) for the final launch vehicle stage. An applicant shall set R equal to the maximum apogee altitude (H_{ap}) multiplied by the dispersion factor as shown below:

$$R = H_{ap} \cdot DISP\left(H_{ap}\right) \qquad \text{(Equation A4 1)}$$

where: $DISP(H_{ap})$ = 0.05

(iii) An applicant shall draw the impact dispersion area on a map with its center on the predicted impact point. An applicant shall then draw line DH in accordance with paragraph (c)(3)(ii)(E)(4).

(d) Evaluate the flight corridor

(1) An applicant shall evaluate the flight corridor for the presence of any populated areas. If an applicant determines that no populated area is located within the flight corridor, then no additional steps are necessary.

(2) If a populated area is located in an overflight exclusion zone, an applicant may modify its proposal or demonstrate that there are times when no people are present or that the applicant has an agreement in place to evacuate the public from the overflight exclusion zone during a launch.

(3) If a populated area is located within the flight corridor, an applicant may modify its proposal and create another flight corridor pursuant to appendix A, use appendix B to narrow the flight corridor. or complete a risk analysis as provided in appendix C.

Table A-l: Debris Dispersion Radius (D_{max}) (in)

Orbital Launch Vehicles				Suborbital Launch Vehicles
Small	Medium	Medium Large	Large	Guided
87,600 (1.20 nm)	111.600 (1.53 nm)	127.200 (1.74 nm)	156,000 (2.14 nm)	96.000 (1.32 nm)

Table A-2: Overflight Exclusion Zone Downrange Distance (D_{OEZ}) (in)

Orbital Launch Vehicles				Suborbital Launch Vehicles
Small	Medium	Medium Large	Large	Guided
240,500 (3.30 nm)	253,000 (3.47 nm)	310,300 (4.26 nm)	937,700 (12.86 nm)	232,100 (3.18 nm)

Table A-3: Flight Corridor Line Segment Lengths

D_{max} (in)		Line Segment Lengths (x 10^6 inches)		
Orbital Launch Vehicles		CF	DE	$\overline{HI}$
Small	87600 (1.20 Ml)	2.87620 (39.45 nm)	8.59452 (117.87 nm)	128.566 (1763.27 nm)
Medium	111,600 (1.53 nm)	2.97220 (40.76 nm)	8.64252 (118.53 nm)	128.566 (1763.27 nm)
Med-Large	127,200 (1.74 nm)	3.03460 (41.62 nm)	8.67372 (118.96 nm)	128.566 (1763.27 nm)
Large	156,000 (2.14 nm)	3.14979 (43.20 nm)	8.73131 (119.75 nm)	128.566 (1763.27 nm)
Suborbital Launch Vehicles		$\overline{CF}$	$\overline{DE}$	$\overline{HI}$
Guided	96,000 (1.32 nm)	2.90980 (39.91 nm)	8.61132 (118.10 nm)	N/A

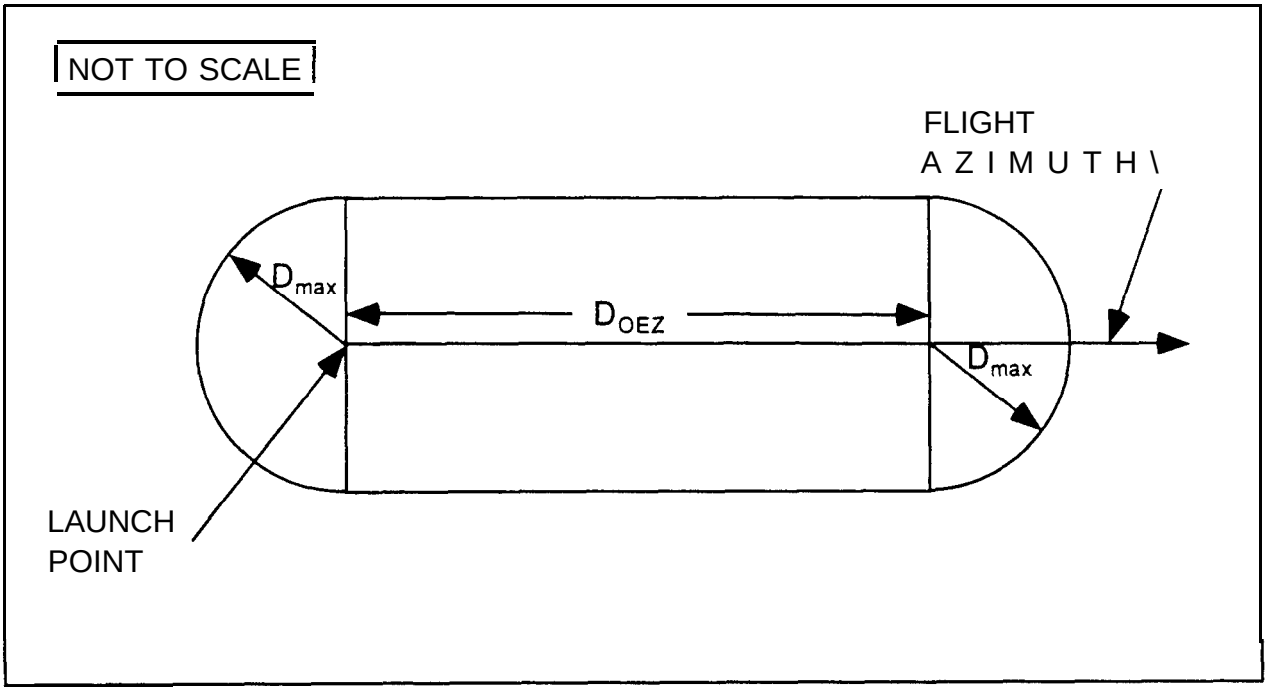

Figure A-l
Overflight Exclusion Zone

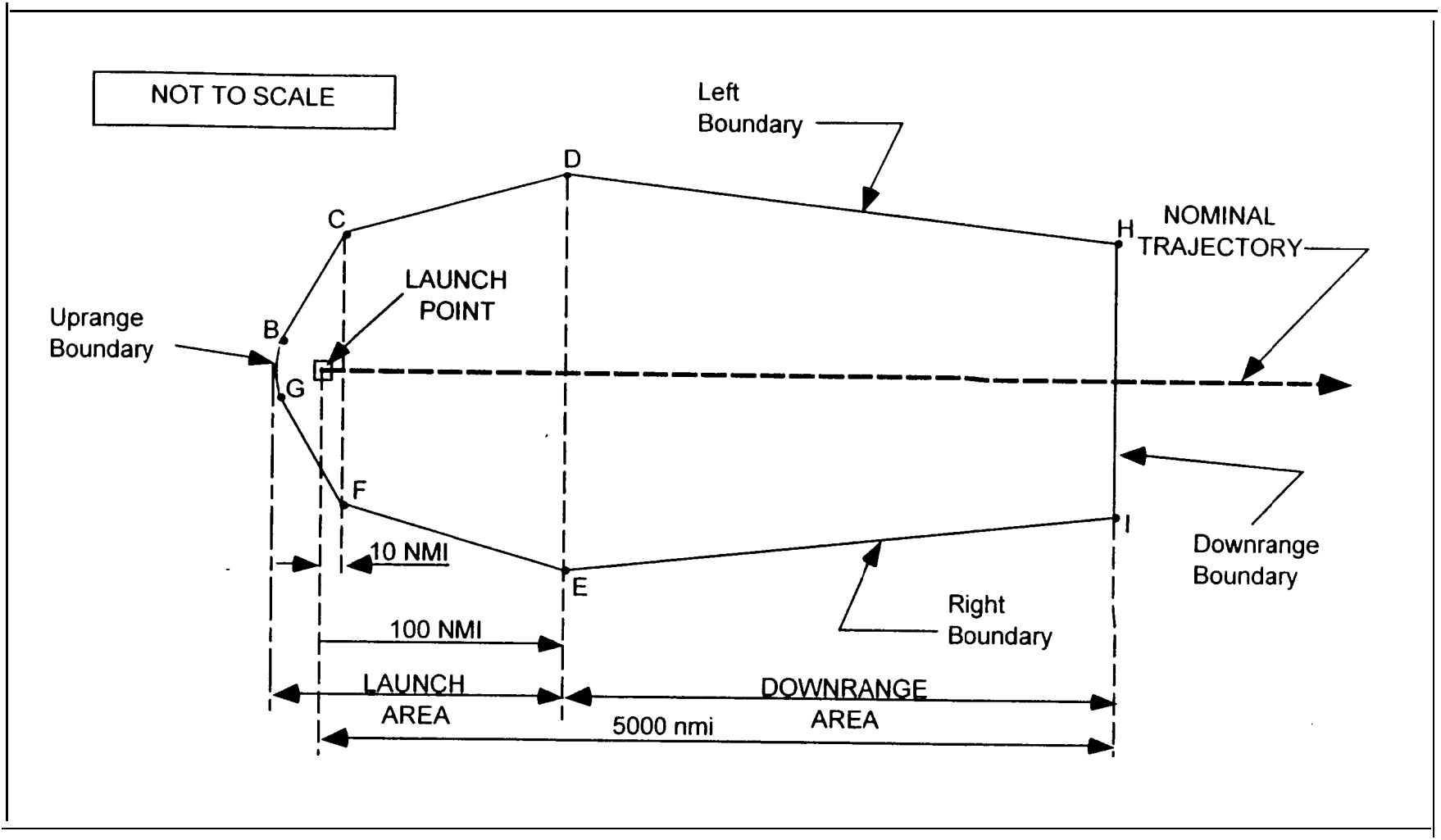

Figure A-2
Flight Corridor

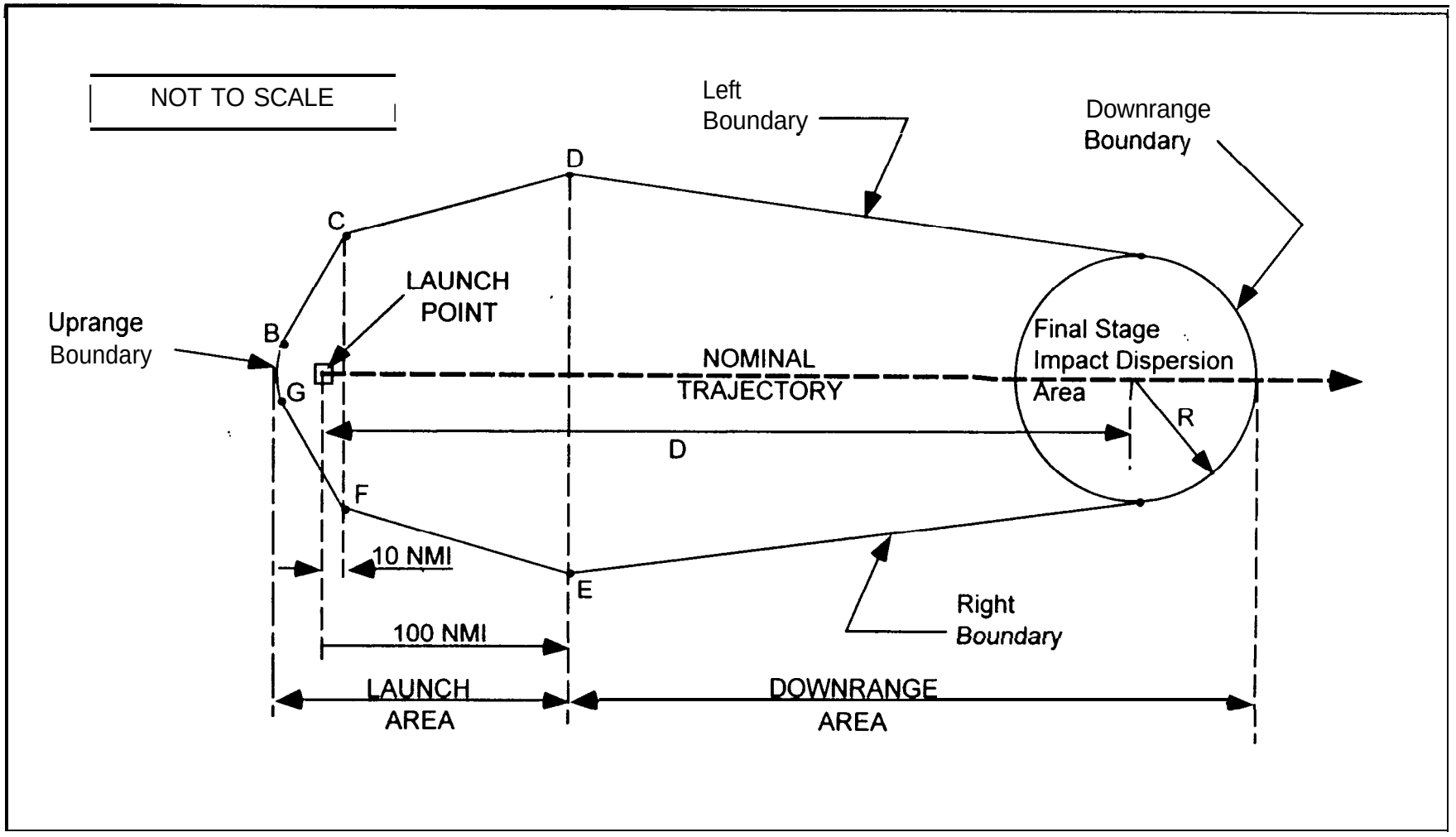

Figure A-4
Flight Corridor for Guided Sub-Orbital Launch Vehicles

Appendix B to Part 420
Method for Defining a Flight Corridor

(a) Introduction

(1) This appendix provides a method to construct a flight corridor from a launch point for a guided suborbital launch vehicle or any one of the four classes of guided orbital launch vehicles from table 1. § 420.2 1. using local meteorological data and a launch vehicle trajectory.

(2) A flight corridor is constructed in two sections — one section comprising a launch area and one section comprising a downrange area. The launch area of a flight corridor reflects the extent of launch vehicle debris impacts in the event of a launch vehicle failure and applying local meteorological conditions. The downrange area reflects the extent of launch vehicle debris impacts in the event of a launch vehicle failure and applying vehicle imparted velocity, malfunctions turns, and vehicle guidance and performance dispersions.

(3) A flight corridor includes an overflight exclusion zone in the launch area and, for a guided suborbital launch vehicle, an impact dispersion area in the downrange area. A flight corridor for a guided suborbital launch vehicle ends with an impact dispersion area and, for the four classes of guided orbital launch vehicles, 5,000 nautical miles (nm) from the launch point.

(b) Data requirements

(1) Launch area data requirements. An applicant shall satisfy the following data requirements to perform the launch area analysis of this appendix. The data requirements are identified in table B-l along with sources where data acceptable to the FAA may be obtained.

(i) An applicant must select meteorological data for the proposed launch site that meet the specifications in table B-l.

Table B-l. Launch Area Data Requirements

Data Category	Data Item	Data Source
Meteorological Data	Local statistical wind data versus altitude up to 50,000 feet. Required data are: altitude (ft), atmospheric density (slugs/ft^3), mean East/West meridianal (u) and North/South zonal (v) wind (ft/sec), standard deviation of u and v wind (ft/sec), correlation coefficient, number of observations and wind percentile (%).	These data may be obtained from: Global Gridded Upper Air Statistics. Climate Applications Branch National Climatic Data Center
Nominal Trajectory Data	State vector data versus time after liftoff in topocentric launch point centered $X,Y,Z,\dot{X},\dot{Y},\dot{Z}$ coordinates with the X-axis aligned with the flight azimuth. Trajectory time intervals shall not be greater than one second. XYZ units are in feet and $\dot{X},\dot{Y},\dot{Z}$ units are in ft/sec.	Actual launch vehicle trajectory data; or trajectory generation software meeting requirements in paragraph (b)(1)(ii).
Debris Data	A fixed ballistic coefficient equal to 3 lbs/ft^2 is used for the launch area.	N/A
Geographical Data	Launch point geodetic latitude on the WGS-84 ellipsoidal earth model	Geographical surveys or Global Positioning System
	Launch point longitude on an ellipsoidal earth model	
	Maps using scales of not less than 1:250,000 inches per inch within 100 nm of a launch point and 1:20,000,000 inches per inch for distances greater than 100 nm from a launch point	Map types with scale and projection information are listed in the Defense Mapping Agency, Public Sale, Aeronautical Charts and Publications Catalog. The catalog and maps may be ordered through the U.S. Dept. of Commerce, National Oceanic and Atmospheric Administration, National Ocean Service

(ii) For a guided orbital launch vehicle, an applicant shall obtain or create a launch vehicle nominal trajectory. An applicant may use trajectory data from a launch vehicle manufacturer or generate a trajectory using trajectory simulation software. Trajectory time intervals shall be no greater than one second. If an applicant uses a trajectory computed with commercially available software products, the software must calculate the trajectory using the following parameters, or demonstrated equivalents:

(A) Launch location:

(1) Launch point. using geodetic latitude and longitude to four decimal places; and

(2) Launch point height above sea level.

(B) Ellipsoidal earth:

(1) Mass of earth:

(2) Radius of earth;

(3) Earth flattening factor; and

(4) Gravitational harmonic constants (J2, J3, J4).

(C) Vehicle characteristics:

(1) Mass, as a function of time;

(2) Thrust, as a function of time;

(3) Specific impulse (I_{SP}), as a function of time; and

(4) Stage dimensions.

(D) Launch events:

(1) Stage bum times; and

(2) Stage drop-off times.

(E) Atmosphere:

(I) Density vs. altitude;

(2) Pressure vs. altitude;

(3) Speed of sound vs. altitude; and

(4) Temperature vs. altitude.

(F) Winds:

(I) Wind direction vs. altitude; and

(2) Wind magnitude vs. altitude.

(I) Aerodynamics: drag coefficient vs. mach number for each stage of flight showing subsonic,, transonic and supersonic mach regions for each stage.

[iii) An applicant shall use a ballistic coefficient (β) of 3 lbs/ft^2 for debris impact computations.

(iv) An applicant shall satisfy the map and plotting requirements for a launch area in appendix A. paragraph (b).

(2) Downrange area data requirements. An applicant shall satisfy the following data requirements to perform the downrange area analysis of this appendix.

(i) The launch vehicle class and method of generating a trajectory used in the launch area shall be used by an applicant in the downrange area as well. Trajectory time intervals must not be greater than one second.

(ii) An applicant shall satisfy the map and plotting data requirements for a downrange area in appendix A, paragraph (b).

(c) Construction of a launch area of a flight corridor

(1) An applicant shall construct a launch area of a flight corridor using the processes and equations of this paragraph for a single trajectory position. An applicant shall repeat these processes at time points on the launch vehicle trajectory in time intervals no greater than one second. When choosing wind data, an applicant shall select a time period between one and 12 months.

(2) A launch area analysis must include all trajectory positions whose Z-values are less than or equal to 50,000 ft.

(3) Each trajectory time is denoted by the subscript "i". Height intervals for a given atmospheric pressure level are denoted by the subscript "j".

(4) Using data from the GGUAS CD-ROM, an applicant shall estimate the mean atmospheric density, maximum wind speed, height interval fall times and height interval debris dispersions for 15 mean geometric height intervals.

(i) The height intervals in the GGUAS source data vary as a function of the following 15 atmospheric pressure levels (millibars): surface, 1000, 850, 700, 500, 400, 300, 250, 200, 150, 100, 70, 50, 30, 10. The actual geometric height associated with each pressure level varies depending on the time of year. An applicant shall estimate the mean geometric height over the period of months selected in subparagraph (1) of this paragraph for each of the 15 pressure levels as shown in equation B 1.

$$\overline{H}_j = \frac{\sum_{m=1}^{k} h_m \cdot n_m}{\sum_{m=1}^{k} n_m} \qquad \text{(Equation B 1)}$$

where: $\overline{H}_j$ = mean geometric height
h_m = geometric height for a given month
n_m = number of observations for a given month
k = number of wind months of interest

(ii) The atmospheric densities in the source data also vary as a function of the 15 atmospheric pressure levels. The actual atmospheric density associated with each pressure level varies depending on the time of year. An applicant shall estimate the mean atmospheric density over the period of months selected in subparagraph (1) of this paragraph for each of the 15 pressure levels as shown in equation B2.

$$\overline{\rho}_j = \frac{\sum_{m=1}^{k} P_m \cdot n_m}{\sum_{m=1}^{k} n_m} \qquad \text{(Equation B2)}$$

where: $\overline{\rho}_j$ = mean atmospheric density
P_m = atmospheric density for a given month
n_m = number of observation for a given month
k = number of wind months of interest

(iii) An applicant shall estimate the algebraic maximum wind speed at a given pressure level as follows and shall repeat the process for each pressure level.

(A) For each month, an applicant shall calculate the monthly mean wind speed ($\overline{W}_z$) for 360 azimuths using equation B3;

(B) An applicant shall select the maximum monthly mean wind speed from the 360 azimuths;

(C) An applicant shall repeat subparagraphs (c)(4)(iii)(A) and (B) for each month of interest; and

(D) An applicant shall select the maximum mean wind speed from the range of months. The absolute value of this wind is designated W_{max} for the current pressure level.

(iv) An applicant shall calculate wind speed using the means for winds from the West (u) and winds from the North (v). An applicant shall use equation B3 to resolve the winds to a specific azimuth bearing.

$$\overline{W}_{az} = u \cdot \cos(90 - az) + v \cdot \sin(90 - az) \qquad \text{(Equation B3)}$$

where: az = wind azimuth
u = West zonal wind component
v = North zonal wind component
$\overline{W}_{az}$ = mean wind speed at azimuth for each month

(v) An applicant shall estimate the interval fall time over a height interval assuming the initial descent velocity is equal to the terminal velocity (V_T). An applicant shall use equations B4 through B6 to estimate the fall time over a given height interval.

$$\Delta H_j = \overline{H}_{j+1} - \overline{H}_j \qquad \text{(Equation B4)}$$

$$V_{Tj} = \left[\frac{2 \cdot \beta}{\frac{\left(\overline{\rho}_{j+1} + \overline{\rho}_j\right)}{2}} \right]^{0.5} \qquad \text{(Equation B5)}$$

$$t_j = \frac{\Delta H_j}{V_{Tj}} \qquad \text{(Equation B6)}$$

where: ΔH_j = height difference between two mean geometric heights
β = ballistic coefficient
$\overline{\rho}_x$ = mean atmospheric density for the corresponding mean geometric heights
v_{Tj} = terminal velocity

(vi) An applicant shall estimate the interval debris dispersion (D_j) by multiplying the interval fall time by the algebraic maximum mean wind speed (W_{max}) as shown in equation B7.

$$D_j = t_j \cdot W_{max} \qquad \text{(Equation B7)}$$

(5) Once the D_j are estimated for each height interval, an applicant shall determine the total debris dispersion (D_i) for each Z_i using a linear interpolation and summation exercise. An applicant shall use a launch point height of zero equal to the surface level of the nearest GGUAS grid location and is shown below in equation B8.

$$D_i = D_j \cdot \left(\frac{Z_i - \overline{H}_j}{\overline{H}_{j+1} - \overline{H}_j} \right) + \sum_{n=1}^{j-1} D_n \qquad \text{(Equation B8)}$$

where: n = number of height intervals below j^{th} height interval

(6) Once all the D_i radii have been calculated. an applicant shall produce a launch area flight corridor according to instructions in subparagraphs (c)(6)(i)-(iv).

(i) On a map meeting the requirements of appendix A. paragraph (b). an applicant shall plot the X_i position location on the flight azimuth for the corresponding Z_i position;

(ii) An applicant shall draw a circle of radius D_i centered on the corresponding X_i position; and

(iii) An applicant shall repeat the instructions in subparagraphs (c)(6)(i)-(ii) for each D_i radius.

(iv) The launch area of a flight corridor is the enveloping line that encloses the outer boundary of the D_i circles as shown in Fig. B-l. The uprange portion of a flight corridor is described by a semi-circle arc that is a portion of either the most uprange D_i dispersion circle, or the overflight exclusion zone (defined in subparagraph (c)(7)), whichever is further uprange.

(7) An applicant shall define an overflight exclusion zone in the launch area pursuant to the instructions provided in appendix A, subparagraph (c)(2).

(8) An applicant shall draw the launch area flight corridor and overflight exclusion zone on a map(s) meeting the requirements of table B- 1.

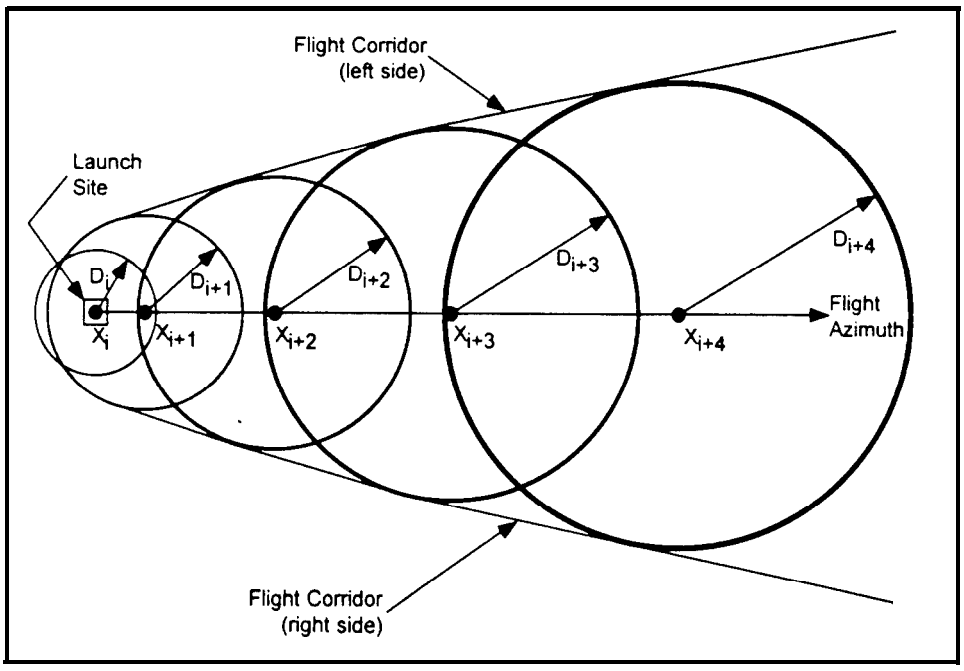

Figure B - 1: Launch Area of a Flight Corridor

(d) Construction of a downrange area of a flight corridor

(1) The downrange area analysis estimates the debris dispersion for the downrange time points on a launch vehicle trajectory. An applicant shall perform the downrange area analysis using the processes and equations of this paragraph.

(2) The dounrange area analysis shall include trajectory positions at a height (the Z_i-values) greater than 50.000 feet and nominal trajectory IIP values less than or equal to 5,000 nm. For a guided suborbital launch vehicle. the final IIP value that an applicant must consider is the launch vehicle final stage impact point. Each trajectory time shall be one second or less and is denoted by the subscript "i".

(3) An applicant shall compute the downrange area of a flight corridor boundary in four steps. from each trajectory time increment: determine a reduction ratio factor; calculate the launch vehicle position after simulating a malfunction turn; rotate the state vector after the malfunction turn in the range of three degrees to one degree as a function of X_i distance downrange; and compute the IIP of the resulting trajectory. The locus of IIPs describes the boundary of the downrange area of a flight corridor. An applicant shall use the following subparagraphs, (d)(3)(i)-(v), to compute the downrange area of the flight corridor boundary:

(i) Compute the downrange distance to the final IIP position for a nominal trajectory as follows:

(A) Using equations B30 through B69, determine the IIP coordinates (ϕ_{max}, λ_{max}) for the nominal state vector before the launch vehicle enters orbit where α in equation B30 is the nominal flight azimuth angle measured from True North.

(B) Using the range and bearing equations in appendix A, paragraph (b)(3), determine the distance (S_{max}) from the launch point coordinates (ϕ_{lp}, λ_{lp}) to the IIP coordinates (ϕ_{max}, λ_{max}) computed in (3)(i)(A) of this paragraph.

(C) The distance for S_{max} may not exceed 5000 nm. In cases when the actual value exceeds 5000 nm the applicant shall use 5000 nm for S,,.

(ii) Compute the reduction ratio factor (F_{ri}) for each trajectory time increment as follows:

(A) Using equations B30 through B69, determine the IIP coordinates (ϕ_i, λ_i) for the nominal state vector where α in equation B30 is the nominal flight azimuth angle measured from True North.

(B) Using the range and bearing equations in appendix A, paragraph (b)(3), determine the distance (S_i) from the launch point coordinates (ϕ_{lp}, λ_{lp}) to the IIP coordinates (ϕ_i, λ_i) computed in (3)(ii)(A) of this paragraph.

(C) The reduction ratio factor is:

$$F_{ri} = \left(1 - \frac{S_i}{S_{max}}\right)$$

(Equation B9)

(iii) An applicant shall compute the launch vehicle position and velocity components after a simulated malfunction turn for each X_i using the following method.

(A) Turn duration (At) = 4 sec.

(B) Turn angle (θ)

$$\theta = (F_{ri}) * 45 \text{ degrees.} \qquad \text{(Equation B 10)}$$

The turn angle equations perform a turn in the launch vehicle's yaw plane. as depicted in figure B-2.

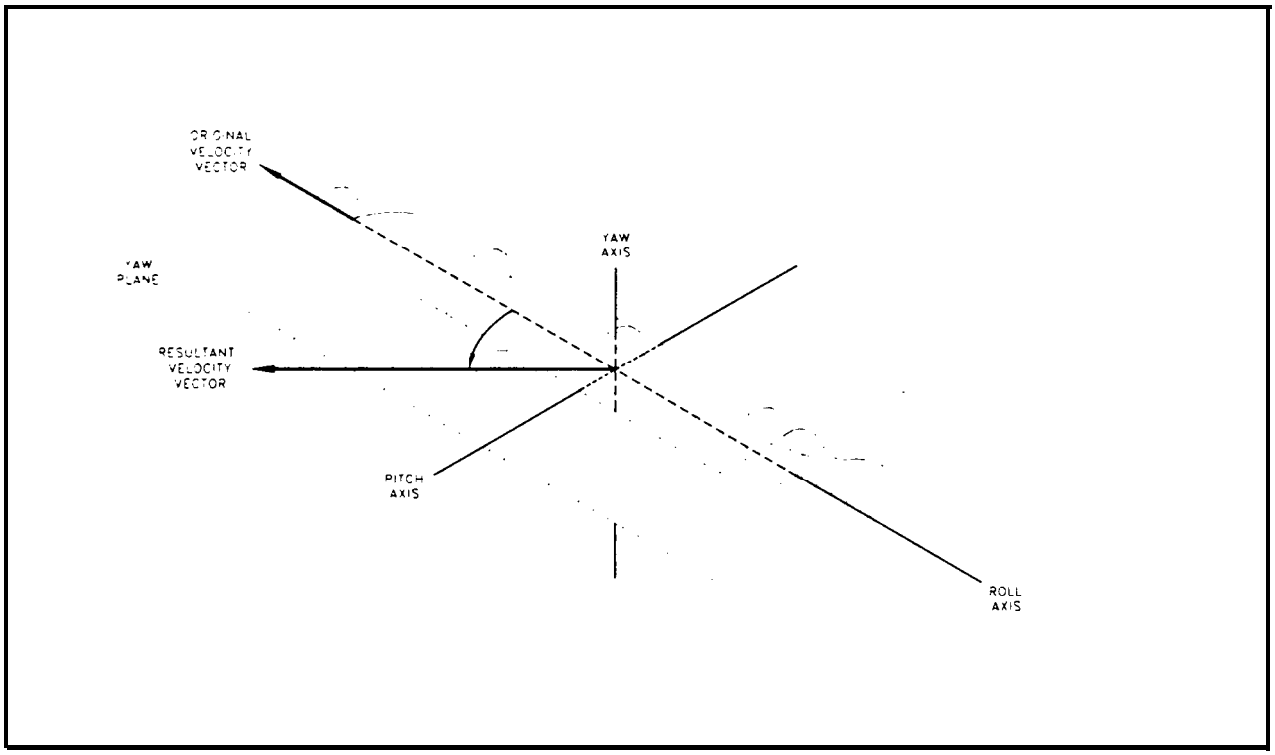

Figure B-2: Velocity Vector Turn Angle in Yaw Plane

(C) Launch vehicle velocity magnitude at the beginning of the turn (V_b) and velocity magnitude at the end of the turn (V,)

$$V_b = \left(\dot{X}_i^2 + \dot{Y}_i^2 + \dot{Z}_i^2\right)^{0.5} \text{ ft/sec} \qquad \text{(Equation B 11)}$$

$$V_e = \left(\dot{X}_{i+5}^2 + \dot{Y}_{i+5}^2 + \dot{Z}_{i+5}^2\right)^{0.5} \text{ ft/sec} \qquad \text{(Equation B 12)}$$

(D) Average velocity magnitude over the turn duration ($\overline{V}$)

$$\overline{V}_i = \frac{(V_b + V_e)}{2} \text{ ft/sec} \qquad \text{(Equation B 13)}$$

(E) Velocity vector path angle (y ,) at turn epoch

$$\gamma_i = \tan^{-1}\left[\frac{\dot{Z}_i}{\left(\dot{X}_i^2 + \dot{Y}_i^2\right)^{0.5}}\right] \qquad \text{(Equation B 14)}$$

(F) Launch vehicle position components at the end of turn duration

$$X_{90L} = X_i + \overline{V}_i \cdot \Delta t \cdot \cos\left(\frac{-\theta}{2}\right) \cdot \cos(\gamma_i)$$
$$X_{90R} = X_i + \overline{V}_i \cdot \Delta t \cdot \cos\frac{\theta}{2} \cdot \cos(\gamma_i)$$
$$Y_{90L} = Y_i + \overline{V}_i \cdot \Delta t \cdot \sin\left(\frac{-\theta}{2}\right)$$
$$Y_{90R} = Y_i + \overline{V}_i \cdot \Delta t \cdot \sin\frac{\theta}{2}$$
$$Z_{90L} = Z_i + \overline{V}_i \cdot \Delta t \cdot \cos\left(\frac{-\theta}{2}\right) \cdot \sin(\gamma_i) - \left(\frac{1}{2}\right) \cdot g_1 \cdot \Delta t^2$$
$$Z_{90R} = Z_i + \overline{V}_i \cdot \Delta t \cdot \cos\left(\frac{\theta}{2}\right) \cdot \sin(\gamma_i) - \left(\frac{1}{2}\right) \cdot g_1 \cdot \Delta t^2$$

(Equations B 15 – B20)

where: $g_1 = 32.17405 \text{ ft/sec}^2$

(G) Launch vehicle velocity components at the end of turn duration

$$\dot{X}_{90L} = (X_{90L} - X_i) / \Delta t$$
$$\dot{X}_{90R} = (X_{90R} - X_i) / \Delta t$$
$$\dot{Y}_{90L} = |(Y_{90L} - Y_i) / \Delta t|$$
$$\dot{Y}_{90R} = (-1) \cdot |(Y_{90R} - Y_i) / \Delta t|$$
$$\dot{Z}_{90L} = (Z_{90L} - Z_i) / \Delta t$$
$$\dot{Z}_{90R} = (Z_{90R} - Z_i) / \Delta t$$

(Equations B2 1 – B26)

(iv) An applicant shall rotate the trajectory state vector at the end of the turn duration to the right and left to define the right-lateral flight corridor boundary and the left-lateral flight corridor boundary, respectively. An applicant shall perform the trajectory rotation in conjunction with a trajectory transformation from the $X_{90}, Y_{90}, Z_{90}, \dot{X}_{90}, \dot{Y}_{90}, \dot{Z}_{90}$ components to $E, N, U, \dot{E}, \dot{N}, \dot{U}$. The trajectory subscripts “R” and “L” from equations B 15 through B26 have been discarded to

reduce the number of equations. An applicant shall transform from $E, N, U, \dot{E}, \dot{N}, \dot{U}$ to $E, F, G, \dot{E}, \dot{F}, \dot{G}$ An applicant shall use the equations of paragraph (d)(3)(iv)(A)-(F) to produce the EFG components necessary to estimate each instantaneous impact point.

(A) An applicant must calculate the flight angle (α)

$$\Delta\alpha_i = 3 - 2 \cdot f_1 \cdot (1 - F_{ri})$$ (Equation B27)

$$\alpha_{Li} = (\text{Flight Azimuth} - \Delta\alpha_i)$$

for left lateral boundary computations (Equation B28)

-OR-

$$\alpha_{Ri} = (\text{Flight Azimuth} + \Delta\alpha_i)$$

for right lateral boundary computations (Equation B29)

where: $$f_1 = \begin{Bmatrix} 0.0: & F_{ri} \geq 0.8 \\ 1.0: & F_{ri} < 0.8 \end{Bmatrix}$$

(B) An applicant shall transform X_{90}, Y_{90}, Z_{90} to E,N,U

$$E = X_{90} \sin(\alpha) - Y_{90} \cos(\alpha)$$
$$N = X_{90} \cos(\alpha) + Y_{90} \sin(a)$$
$$U = Z_{90}$$ (Equation B30 - B32)

(C) An applicant shall transform $\dot{X}_{90}, \dot{Y}_{90}, \dot{Z}_{90}$ to $\dot{E}, \dot{N}, \dot{U}$.

$$\dot{E} = \dot{X}_{90} \sin(\alpha) - \dot{Y}_{90} \cos(\alpha)$$
$$\dot{N} = \dot{X}_{90} \cos(\alpha) + \dot{Y}_{90} \sin(\alpha)$$
$$\dot{U} = \dot{Z}_{90}$$ (Equation B33 - B35)

(D) An applicant shall transform the launch point coordinates (ϕ_0, λ_0, h_0) to E_0, F_0, G_0

$$R = a_E \left\{1 - e^2\left[\sin^2(\phi_0)\right]\right\}^{-0.5}$$

where: a_E = 20925646.3255 ft

e^2 = 0.00669437999013 (Equation B36 - B39)

$$E_0 = (R + h_0)\cos(\phi_0)\cos(\lambda_0)$$
$$F_0 = (R + h_0)\cos(\phi_0)\sin(\lambda_0)$$
$$G_0 = [R(1 - e^2) + h_0]\sin(\phi_0)$$

(E) An applicant shall transform E,N,U to E_{90}, F_{90}, G_{90}

$$E_{90} = E\cos(270 - \lambda_0) + N\cos(90 - \phi_0)\sin(270 - \lambda_0) - U\sin(90 - \phi_0)\sin(270 - \lambda_0) + E_0$$
$$F_{90} = E\sin(270 - \lambda_0) + N\cos(90 - \phi_0)\cos(270 - \lambda_0) - U\sin(90 - \phi_0)\cos(270 - \lambda_0) + F_0$$
$$G_{90} = N\sin(90 - \phi_0) + U\cos(90 - \phi_0) + G_0$$

(Equation B40 - B42)

(F) An applicant shall transform $\dot{E}$, $\dot{N}$, $\dot{U}$ to $\dot{E}$, $\dot{F}$, $\dot{G}$

$$\dot{E}_{90} = \dot{E}\cos(270 - \lambda_0) + \dot{N}\cos(90 - \phi_0)\sin(270 - \lambda_0) - \dot{U}\sin(90 - \phi_0)\sin(270 - \lambda_0)$$
$$\dot{F}_{90} = \dot{E}\sin(270 - \lambda_0) + \dot{N}\cos(90 - \phi_0)\cos(270 - \lambda_0) - \dot{U}\sin(90 - \phi_0)\cos(270 - \lambda_0)$$
$$\dot{G}_{90} = \dot{N}\sin(90 - \phi_0) + \dot{U}\cos(90 - \phi_0)$$

(Equation B43 - B45)

(v) The IIP computation implements an iterative solution to the impact point problem. An applicant shall solve Equations B46 through B69, with the appropriate substitutions, up to a ma..imum of five times. Each repetition of the equations provides a more accurate prediction of the IIP. The required IIP computations are shown in subsection (d)(3)(v)(A)-(W) below. An applicant shall use this computation for both the left- and right-lateral offsets. The IIP computations will result in latitude and longitude pairs for the left-lateral flight corridor boundary and the right-lateral flight corridor boundary. An applicant shall use the lines connecting the latitude and longitude pairs to describe the entire downrange area boundary of the flight corridor up to 5000 nm or a final stage impact dispersion area.

(A) An applicant shall approximate the radial distance ($r_{k,1}$) from the geocenter to the IIP. The distance from the center of the earth ellipsoid to the launch point shall be used for the initial approximation of $r_{k,1}$ as shown in equation B46.

$$r_{k.1} = \left(E_0^2 + F_0^2 + G_0^2\right)^{0.5}$$ (Equation B46)

(B) An applicant shall compute the radial distance (r) from the geocenter to the launch vehicle position.

$$r = \left(E_{90}^2 + F_{90}^2 + G_{90}^2\right)^{0.5}$$ (Equation B47)

If $r < r_{k.1}$ then the launch vehicle position is below the Earth's surface and an impact point cannot be computed. An applicant must restart the calculations with the next trajectory state vector.

(C) An applicant shall compute the inertial velocity components.

$$\dot{E}I_{90} = \dot{E}_{90} - \omega \cdot F_{90}$$
$$\dot{F}I_{90} = \dot{F}_{90} + \omega \cdot E_{90}$$ (Equation B48 - B49)

where: $\omega = 4.178074 \times 10^{-3}$ deg/sec

(D) An applicant shall compute the magnitude of the inertial velocity vector.

$$v_0 = \left(\dot{E}I_{90}^2 + \dot{F}I_{90}^2 + \dot{G}_{90}^2\right)^{0.5}$$ (Equation B50)

(E) An applicant shall compute the eccentricity of the trajectory ellipse multiplied by the cosine of the eccentric anomaly at epoch (ε_c).

$$\varepsilon_c = \left(\frac{r \cdot v_0^2}{K}\right) - 1$$ (Equation B51)

where: $K = 1.407644 \times 10^{16}$ ft^3/sec^2

(F) An applicant shall compute the semi-major axis of the trajectory ellipse (a_t).

$$a_t = \frac{r}{(1 - \varepsilon_c)}$$ (Equation B52)

If $a_t < 0$ or $a_t > \infty$ then the trajectory orbit is not elliptical, but is hyperbolic or parabolic. and an impact point cannot be computed. The launch vehicle has achieved escape velocity and the applicant may terminate computations.

(G) An applicant shall compute the eccentricity of the trajectory ellipse multiplied by the sine of the eccentric anomaly at epoch (ε_s).

$$\varepsilon_s = \frac{\left(E_{90}\dot{E}I_{90} + F_{90}\dot{F}I_{90} + G_{90}\dot{G}_{90}\right)}{\left(K \cdot a_t\right)^{0.5}} \qquad \text{(Equation B53)}$$

(H) An applicant shall compute the eccentricity of the trajectory ellipse squared $\left(\varepsilon^2\right)$.

$$\varepsilon^2 = \left(\varepsilon_c^2 + \varepsilon_s^2\right) \qquad \text{(Equation B54)}$$

If [a, $(1 - \varepsilon)$ – a,] > 0 and $\varepsilon \geq 0$ then the trajectory perigee height is positive and an impact point cannot be computed. The launch vehicle has achieved earth orbit and the applicant may terminate computations.

(I) An applicant shall compute the eccentricity of the trajectory ellipse multiplied by the cosine of the eccentric anomaly at impact (ε_{c_k}).

$$\varepsilon_{c_k} = \frac{\left(a_t - r_{k,1}\right)}{a_t} \qquad \text{(Equation B55)}$$

(J) An applicant shall compute the eccentricity of the trajectory ellipse multiplied by the sine of the eccentric anomaly at impact (ε_{s_k}).

$$\varepsilon_{s_k} = -\left(\varepsilon^2 - \varepsilon_{c_k}^2\right)^{0.5} \qquad \text{(Equation B56)}$$

If $\varepsilon_{s_k} < 0$ then the trajectory orbit does not intersect the Earth's surface and an impact point cannot be computed. The launch vehicle has achieved earth orbit and the applicant may terminate computations.

(K) An applicant shall compute the cosine of the difference between the eccentric anomaly at impact and the eccentric anomaly at epoch ($\Delta\varepsilon_{c_k}$).

$$\Delta\varepsilon_{c_k} = \frac{\left(\varepsilon_{c_k} \cdot \varepsilon_c\right) + \left(\varepsilon_{s_k} \cdot \varepsilon_s\right)}{\varepsilon^2} \qquad \text{(Equation B57)}$$

(L) An applicant shall compute the sine of the difference between the eccentric anomaly at impact and the eccentric anomaly at epoch ($\Delta\varepsilon_{s_k}$).

$$\Delta\varepsilon_{s_k} = \frac{\left(\varepsilon_{s_k} \cdot \varepsilon_c\right) - \left(\varepsilon_{c_k} \cdot \varepsilon_s\right)}{\varepsilon^2} \qquad \text{(Equation B58)}$$

(M) An applicant shall compute the f-series expansion of Kepler's equations.

$$f_2 = \frac{\left(\Delta\varepsilon_{c_k} - \varepsilon_c\right)}{\left(1 - \varepsilon_c\right)} \qquad \text{(Equation B59)}$$

(N) An applicant shall compute the g-series expansion of Kepler's equations.

$$g_2 = \left(\Delta\varepsilon_{s_k} + \varepsilon_s - \varepsilon_{s_k}\right)\left(\frac{a_t^3}{K}\right)^{0.5} \qquad \text{(Equation B60)}$$

(0) An applicant shall compute the E,F,G coordinates at impact (E_i,F_i,G_i).

$$\begin{aligned} E_k &= f_2 \cdot E_{90} + g_2 \cdot \dot{E}_{90} \\ F_k &= f_2 \cdot F_{90} + g_2 \cdot \dot{F}_{90} \\ G_k &= f_2 \cdot G_{90} + g_2 \cdot \dot{G}_{90} \end{aligned} \qquad \text{(Equation B61 - B63)}$$

(P) An applicant shall approximate the distance from the geocenter to the launch vehicle position at impact ($r_{k,2}$).

$$r_{k,2} = \frac{a_E}{\left[\left(\frac{e^2}{1-e^2}\right)\left(\frac{G_k}{r_{k,1}}\right)^2 + 1\right]^{0.5}} \qquad \text{(Equation B64)}$$

where: a_E = 20925646.3255 ft

e^2 = 0.00669437999013

(Q) An applicant shall let $r_{k+1,1} = r_{k,2}$, substitute $r_{k+1,1}$ for $r_{k,1}$ in equation B55 and repeat equations B55 - B64 up to four more times incrementing "k" by one on each loop (e.g. $k \in \{1, 2, 3, 4, 5\}$). If $\left|r_{5,1} - r_{5,2}\right| > 1$ then the iterative solution does not converge and an impact point does not meet the accuracy tolerance of plus or minus one foot. An applicant must try more iterations, or restart the calculations with the next trajectory state vector.

(R) An applicant shall compute the difference between the eccentric anomaly at impact and the eccentric anomaly at epoch ($\Delta\varepsilon$).

$$\Delta\varepsilon = \tan^{-1}\left(\frac{\Delta\varepsilon_{s_5}}{\Delta\varepsilon_{c_5}}\right) \qquad \text{(Equation B65)}$$

(S) An applicant shall compute the time of flight from epoch to impact (t).

$$t = \left(\Delta\varepsilon + \varepsilon_s - \varepsilon_{s_5}\right)\left(\frac{a_t^3}{K}\right)^{0.5} \qquad \text{(Equation B66)}$$

(T) An applicant shall compute the geocentric latitude at impact (ϕ').

$$\phi_i' = \sin^{-1}\left(\frac{G_5}{r_{5,2}}\right)$$

(Equation B67)

where: $+90^\circ \geq \phi_i' \geq -90^\circ$

(U) An applicant shall compute the geodetic latitude at impact (ϕ).

$$\phi_i = \tan^{-1}\left[\frac{\tan(\phi_i')}{(1-e^2)}\right]$$

(Equation B68)

where: $+90^\circ \geq \phi_i \geq -90^\circ$

(V) An applicant shall compute the East longitude at impact (λ).

$$\lambda_i = \tan^{-1}\left(\frac{F_5}{E_5}\right) - \omega t \qquad \text{(Equation B69)}$$

(W) If the range from the launch point to the impact point is equal to or greater than 5000 nm, an applicant shall terminate IIP computations.

(4) For a guided suborbital launch vehicle, an applicant shall define a final stage impact dispersion area as part of the flight corridor and show the area on a map using the following procedure:

(i) For equation B70 below, an applicant shall use an apogee altitude (H_{ap}) corresponding to the highest altitude reached by the launch vehicle final stage in the applicant's launch vehicle trajectory analysis done in accordance with paragraph (b)(1)(ii).

(ii) An applicant shall define the final stage impact dispersion area by using a dispersion factor [$DISP(H_{ap})$] as shown below. An applicant shall calculate the impact dispersion radius (R) for

the final launch vehicle stage. An applicant shall set R equal to the maximum apogee altitude (H_{ap}) multiplied by the dispersion factor as shown below:

$$R = H_{ap} \cdot DISP(H_{ap}) \qquad \text{(Equation B70)}$$

where: $DISP(H_{ap}) = 0.05$

(5) An applicant shall combine the launch area and downrange area flight corridor and any final stage impact dispersion area for a guided suborbital launch vehicle.

(i) On the same map with the launch area flight corridor, an applicant shall plot the latitude and longitude positions of the left and right sides of the downrange area of the flight corridor calculated in subparagraph (d)(3).

(ii) An applicant shall connect the latitude and longitude positions of the left side of the downrange area of the flight corridor sequentially starting with the last IIP calculated on the left side and ending with the first IIP calculated on the left side. An applicant shall repeat this procedure for the right side.

(iii) An applicant shall connect the left sides of the launch area and downrange portions of the flight corridor. An applicant shall repeat this procedure for the right side.

(iv) An applicant shall plot the overflight exclusion zone defined in subparagraph (c)(7).

(v) An applicant shall draw any impact dispersion area on the downrange map with the center of the impact dispersion area on the launch vehicle final stage impact point obtained from the applicant's launch vehicle trajectory analysis done in accordance with subparagraph (b)(1)(ii).

(e) Evaluate the launch site

(1) An applicant shall evaluate the flight corridor for the presence of populated areas. If no populated area is located within the flight corridor, then no additional steps are necessary.

(2) If a populated area is located in an overflight exclusion zone, an applicant may modify its proposal or demonstrate that there are times when no people are present or that the applicant has an agreement in place to evacuate the public from the overflight exclusion zone during a launch.

(3) If a populated area is located within the flight corridor, an applicant may modify its proposal or complete an overflight risk analysis as provided in appendix C.

Appendix C to Part 420
Risk Analysis

(a) Introduction

(1) This appendix provides a method for an applicant to estimate the expected casualty (E,) for a launch of a guided launch vehicle using a flight corridor generated either by appendix A or appendix B. This appendix also provides an applicant options to simplify the method where population at risk is minimal.

(2) An applicant shall perform a risk analysis when a populated area is located within a flight corridor defined by either appendix A or appendix B. If the estimated expected casualty exceeds 30×10^{-6}, an applicant may either modify its proposal, or if the flight corridor used was generated by the appendix A method, use the appendix B method to narrow the flight corridor and then redo the overflight risk analysis pursuant to this appendix C. If the estimated expected casualty still exceeds 30×10^{-6}, the FAA will not approve the location of the proposed launch point.

(b) Data Requirements

(1) An applicant shall obtain the data specified in subparagraphs (b)(2) and (3) and summarized in table C-l. Table C-l provides sources where an applicant may obtain data acceptable to the FAA. An applicant will also employ the flight corridor information from appendix A or B, including flight azimuth and, for an appendix B flight corridor, trajectory information.

(2) Population Data. Total population (N) and the total landmass area within a populated area (A) are required. Population data up to and including 100 nm from the launch point are required at the U.S. census block group level. Population data downrange from 100 nm are required at no greater than $1^{\circ} \times 1^{\circ}$ latitude/longitude grid coordinates.

(3) Launch Vehicle Data. These data consist of the launch vehicle failure probability (P_f), the launch vehicle effective casualty area (A,), trajectory position data, and the overflight dwell time (t_d). The failure probability is **a** constant (P_f = 0.10) for a guided orbital or suborbital launch vehicle. Table C-3 provides effective casualty area data based on IIP range. Trajectory position information is provided from distance computations given in this appendix for an appendix A flight corridor, or trajectory data used in appendix B for an appendix B flight corridor. The dwell time (t_d) may be determined from trajectory data produced when creating an appendix B flight corridor.

Table C-l. Overflight Analysis Data Requirements

Data Category	Data Item	Data Source
Population Data	Total population within a populated area (N)	Within 100 nm of the launch point: U.S. census data at the census block-group level. Downrange from 100 nm beyond the launch point, world population data are available from: Carbon Dioxide Information Analysis Center (CDIAC) Oak Ridge National Laboratory Database - Global Population Distribution (1990), Terrestrial Area and Country Name Information on a One by One Degree Grid Cell Basis (DB1016 (84996)
	Total landmass area within the populated area (A)	
Launch Vehicle Data	Failure probability - P_f = 0.10	NIA
	Effective casualty area (A_c)	See table C-3
	Overflight dwell time	Determined by range from the launch point or trajectory used by applicant
	Nominal Trajectory Data (for an appendix B flight corridor only)	See appendix B, table B-l.

(c) Estimating corridor casualty expectation

(1) A corridor casualty expectation [E,(Corridor)] estimate is the sum of the expected casualty measurement of each populated area inside a flight corridor.

(2) An applicant shall identify and locate each populated area in the proposed flight corridor.

(3) An applicant shall determine the probability of impact in each populated area using the procedures in subparagraphs (5) or (6) of this paragraph. Figures C-l and C-2 show an area considered for probability of impact (Pi) computations by the dashed-lined box around the populated area within a flight corridor, and figure C-3 shows a populated area in a final stage impact dispersion area. An applicant shall then estimate the E_c for each populated area using the procedures in subparagraphs (7) and (8) of this paragraph.

(4) The P_i computations do not directly account for populated areas whose areas are bisected by an appendix A flight corridor centerline or an appendix B nominal trajectory ground trace. Accordingly, an applicant must evaluate P_i for each of the bi-sections as two separate populated areas, as shown in figure C-4, which shows one bi-section to the left of an appendix A flight corridor's centerline and one on its right.

(5) Probability of Impact (Pi) Computations for a Populated Area in an appendix A Flight Corridor. An applicant shall compute P_i for each populated area using the following method:

(i) For the launch and downrange areas. but not a final stage impact dispersion area for a guided suborbital launch vehicle, an applicant shall compute P, for each populated area using the following equation:

$$P_i = \frac{\left(\frac{|y_2 - y_1|}{\sigma_y}\right)}{6\sqrt{2\pi}} \cdot \left| \exp\left(\frac{-\left(\frac{y_1}{\sigma_y}\right)^2}{2}\right) + 4 \cdot \exp\left[\frac{-\left(\frac{y_1 + y_2}{2\sigma_y}\right)^2}{2}\right] \right| t \exp\left(\frac{-\left(\frac{y_2}{\sigma_y}\right)^2}{2}\right)\right) \cdot \left[\frac{P_f}{C} \cdot \frac{(x_2 - x_1)}{\dot{R}}\right]$$

(Equation C 1)

where:

x_1, x_2 = closest and farthest downrange distance (nm) along the flight corridor centerline to the populated area (see figure C-l)

y_1, y_2 = closest and farthest cross range distance (nm) to the populated area measured from the flight corridor centerline (see figure C- 1)

σ_y = one-fifth of the cross range distance from the centerline to the flight corridor boundary (see figure C-l)

exp = exponential function (e^x)

P_f = probability of failure = 0.10

$\dot{R}$ = IIP range rate (nm/sec) (see table C-2)

C = 643 seconds (constant)

Table C-2: IIP Range Rate vs. IIP Range

IIP Range (nm)	IIP Range Rate (nm/s)
0 - 75	0.75
76 - 300	1.73
301 - 900	4.25
901 - 1700	8.85
1701 - 2600	19.75
2601 - 3500	42.45
3500 - 4500	84.85
4501 - 5250	154.95

(ii) For each populated area within a final stage impact dispersion area, an applicant shall compute P_i using the following method:

(A) An applicant shall estimate the probability of final stage impact in the x and y sectors of each populated area within the final stage impact dispersion area using equations C2 and C3:

$$P_x = \frac{\left(\frac{|x_2 - x_1|}{\sigma_x}\right)}{6\sqrt{2\pi}} \left(\exp\left(\frac{-\left(\frac{x_1}{\sigma_x}\right)^2}{2}\right) + 4 \cdot \exp\left[\frac{-\left(\frac{x_1 + x_2}{2\sigma_x}\right)^2}{2}\right] + \exp\left(\frac{-\left(\frac{x_2}{\sigma_x}\right)^2}{2}\right)\right)$$

(Equation C2)

where: x_1, x_2 = closest and farthest downrange distance, measured along the flight corridor centerline, measured from the nominal impact point to the populated area (see figure C-3)

σ_x = one-fifth of the impact dispersion radius (see figure C-3)

exp = exponential function (e")

$$P_y = \frac{\left(\frac{|y_2 - y_1|}{\sigma_y}\right)}{6\sqrt{2\pi}} \left(\exp\left(\frac{-\left(\frac{y_1}{\sigma_y}\right)^2}{2}\right) + 4 \cdot \exp\left[\frac{-\left(\frac{y_1 + y_2}{2\sigma_y}\right)^2}{2}\right] + \exp\left(\frac{-\left(\frac{y_2}{\sigma_y}\right)^2}{2}\right)\right)$$

(Equation C3)

where: y_1, y_2 = closest and farthest cross range distance to the populated area measured from the flight corridor centerline (see figure C-3)

σ_y = one-fifth of the impact dispersion radius (see figure C-3)

exp = exponential function (e")

(B) If a populated area intersects the impact dispersion area boundary so that the x_2 or y_2 distance would otherwise extend outside the impact dispersion area, the x_2 or y_2 distance should be set equal to the impact dispersion area radius. The x_2 distance for populated area A in figure C-3 is an example. If a populated area intersects the flight azimuth, an applicant shall solve equation C3 by obtaining the solution in two parts. An applicant shall determine, first, the probability between $y_1 = 0$ and $y_2 = a$ and, second, the probability between $y_1 = 0$ and $y_2 = b$, as depicted in figure C-4. The probability P_y is then equal to the sum of the probabilities of the two

parts. If a populated area intersects the line that is normal to the flight azimuth on the impact point. an applicant shall solve equation C2 by obtaining the solution in two parts in a similar manner with the values of x.

(C) An applicant shall calculate the probability of impact for each populated area using equation C4 below:

$$P_I = P_s \cdot P_x \cdot P_y \qquad \text{(Equation C4)}$$

where: $P_s = 1 - P_f = 0.90$

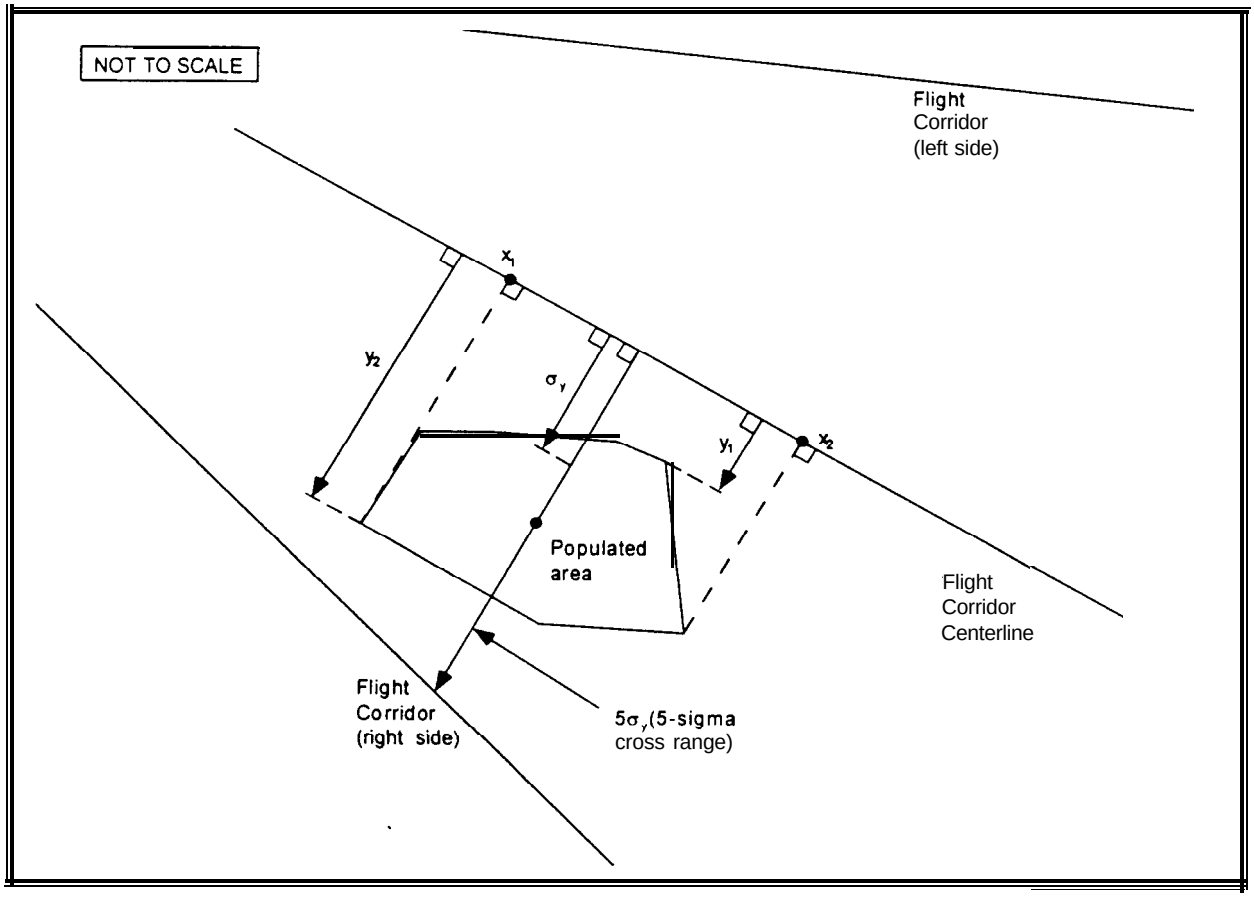

Figure C-l: Analysis of an Appendix A Flight Corridor

(6) Probability of Impact Computations for a Populated Area in an appendix B Flight Corridor. An applicant shall compute P_i using the following method:

(i) For the launch and downrange areas, but not a final stage impact dispersion area for a guided suborbital launch vehicle, an applicant shall compute P_i for each populated area using the following equation:

$$P_i = \frac{\left(\frac{|y_2 - y_1|}{\sigma_y}\right)}{6\sqrt{2\pi}} \cdot \left[\exp\left(\frac{-\left(\frac{y_1}{\sigma_y}\right)^2}{2}\right) + 4 \cdot \exp\left[\frac{-\left(\frac{y_1 + y_2}{2\sigma_y}\right)^2}{2}\right] + \exp\left(\frac{-\left(\frac{y_2}{\sigma_y}\right)^2}{2}\right)\right] \cdot \left(\frac{P_f}{t} \cdot t_d\right)$$

(Equation C5)

where:

y_1, y_2 = closest and farthest cross range distance (nm) to a populated area measured from the nominal trajectory IIP ground trace (see figure C-2)

σ_y = one-fifth of the cross range distance (nm) from nominal trajectory to the flight corridor boundary (see figure C-2)

exp = exponential function (e^x)

P_f = probability of failure = 0.10

t = flight time from lift-off to orbital insertion (seconds)

t_d = overflight dwell time (seconds)

(ii) For each populated area within a final stage impact dispersion area, an applicant shall compute P_i using the following method:

(A) An applicant shall estimate the probability of final stage impact in the x and y sectors of each populated area within the final stage impact dispersion area using equations C6 and C7:

$$P_x = \frac{\left(\frac{|x_2 - x_1|}{\sigma_x}\right)}{6\sqrt{2\pi}} \cdot \left[\exp\left(\frac{-\left(\frac{x_1}{\sigma_x}\right)^2}{2}\right) + 4 \cdot \exp\left[\frac{-\left(\frac{x_1 + x_2}{2\sigma_x}\right)^2}{2}\right] + \exp\left(\frac{-\left(\frac{x_2}{\sigma_x}\right)^2}{2}\right)\right]$$

(Equation C6)

where: x_1, x_2 = closest and farthest downrange distance, measured along nominal trajectory IIP ground trace, measured from the nominal impact point to the populated area (see figure C-3)

σ_x = one-fifth of the impact dispersion radius (see figure C-3)

exp = exponential function (e^x)

$$P_y = \frac{\left(\frac{|y_2 - y_1|}{\sigma_y}\right)}{6\sqrt{2\pi}} \left[\exp\left[\frac{-\left(\frac{y_1}{\sigma_y}\right)^2}{2}\right] + 4 \cdot \exp\left[\frac{-\left(\frac{y_1 + y_2}{2\sigma_y}\right)^2}{2}\right] + \exp\left[\frac{-\left(\frac{y_2}{\sigma_y}\right)^2}{2}\right] \right]$$

(Equation C7)

where: y_1, y_2 = closest and farthest cross range distance to the populated area measured from the nominal trajectory IIP ground trace (see figure C-3)

σ_y = one-fifth of the impact dispersion radius (see figure C-3)

exp = exponential function (e”)

(B) If a populated area intersects the impact dispersion area boundary so that the x_2 or y_2 distance would otherwise extend outside the impact dispersion area, the x_2 or y_2 distance should be set equal to the impact dispersion area radius. The x_2 distance for populated area A in figure C-3 is an example. If a populated area intersects the flight azimuth, an applicant shall solve equation C7 by obtaining the solution in two parts. An applicant shall determine, first, the probability between $y_1 = 0$ and $y_2 = a$ and, second, the probability between $y_1 = 0$ and $y_2 = b$, as depicted in figure C-4. The probability P_y is then equal to the sum of the probabilities of the two parts. If a populated area intersects the line that is normal to the flight azimuth on the impact point. an applicant shall solve equation C6 by obtaining the solution in two parts in a similar manner with the values of x.

(C) An applicant shall calculate the probability of impact for each populated area using equation C8 below:

$$P_f = P_s \cdot P_x \cdot P_y$$ (Equation CS)

where: $P_s = 1 - P_f = 0.90$

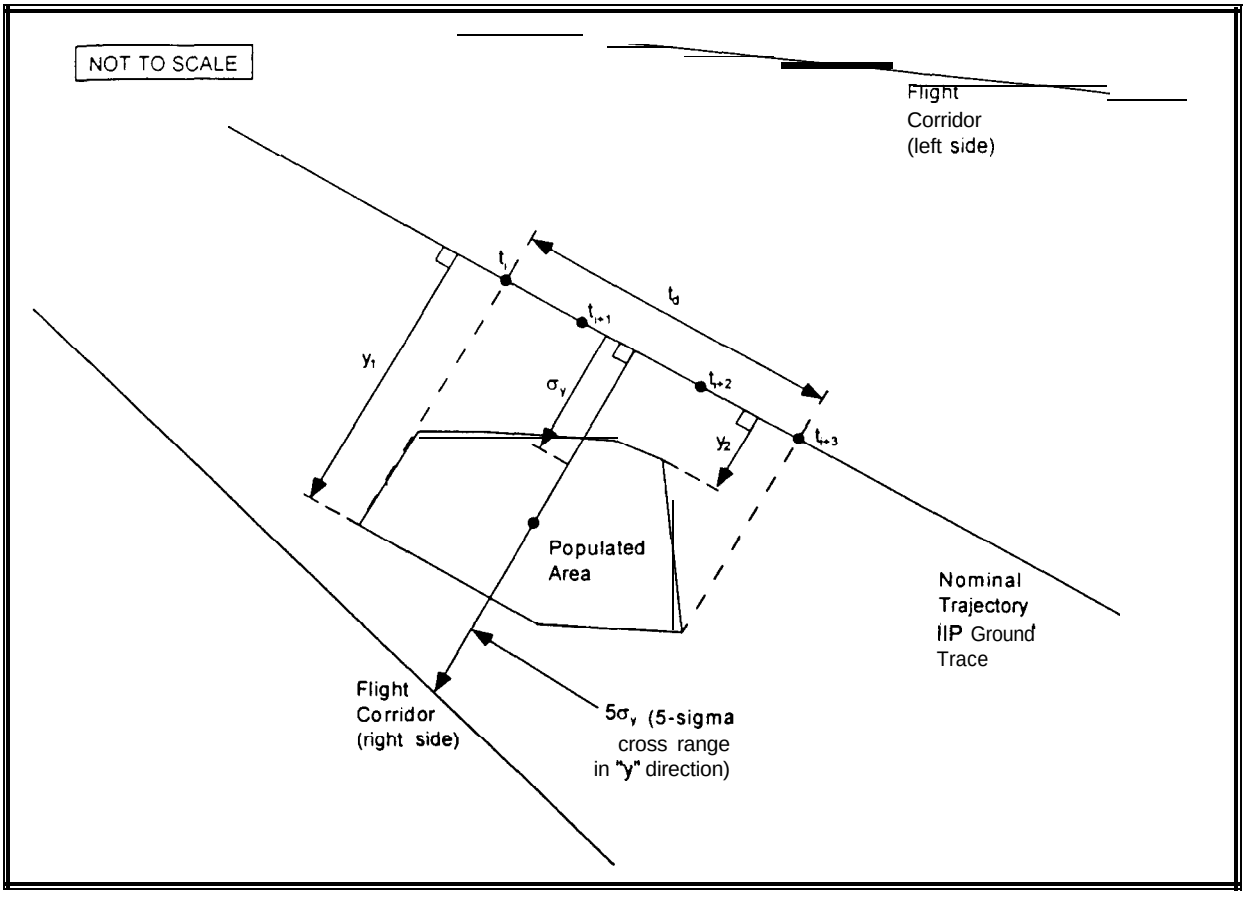

Figure C-2: Analysis of an Appendix B Flight Corridor

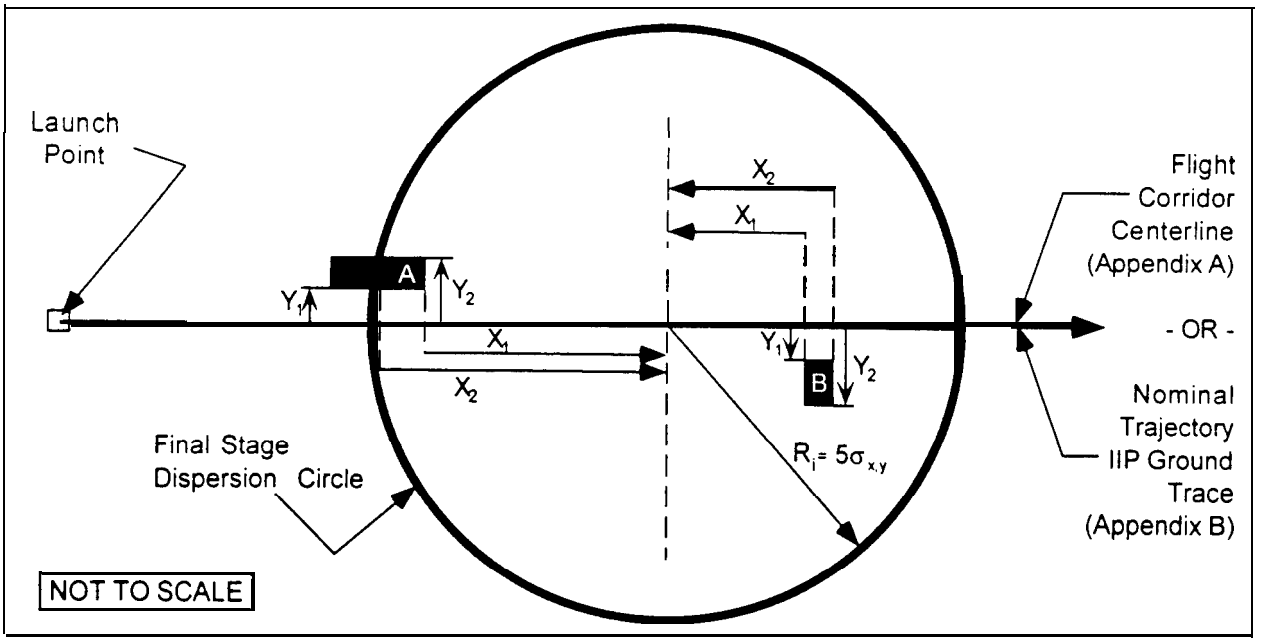

Figure C-3: Appendix A and B Final Stage Impact Risk Analysis

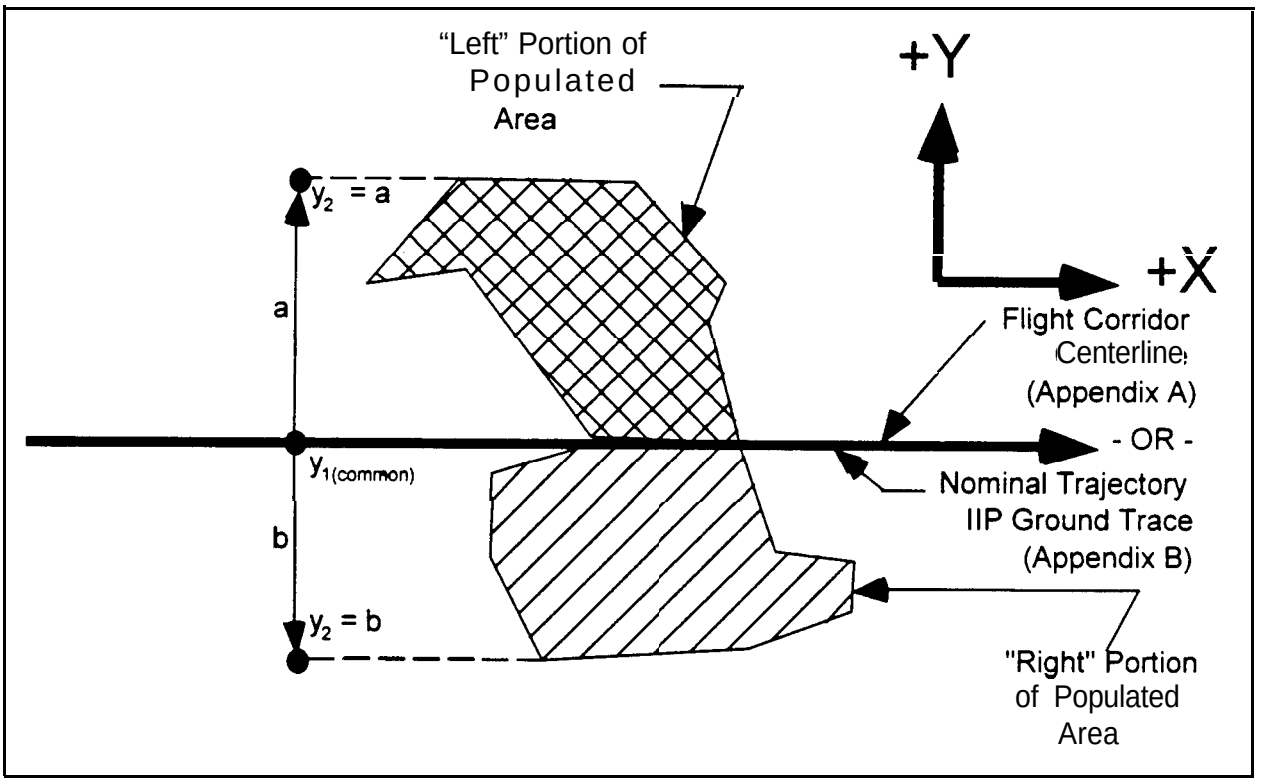

Figure C-4: Flight Azimuth Intersecting a Populated Area

(7) Using the P, calculated in either subparagraph (c)(5) or (6) of this paragraph. an applicant shall calculate the casualty expectancy for each populated area within the flight corridor. E_{ck} is the casualty expectancy for a given populated area as shown in equation C9. where individual populated areas are designated with the subscript "k".

$$E_{ck} = P_i \cdot \left(\frac{A_c}{A_k} \right) \cdot N_k \qquad \text{(Equation C9)}$$

where: A, = casualty area (from table C-3)
A_k = populated area
N_k = population in A_k

Table C-3: Effective Casualty Area (miles') vs. IIP Range (nm)

	Orbital Launch Vehicles				**Suborbital Launch Vehicles**
IIP Range (nmi)	Small	Medium	Medium Large	Large	Guided
0 - 49	0.43	0.53	0.71	1.94	0.43
50 - 1749	0.13	0.0022	0.11	0.62	0.13
1750 - 5000	3.59×10^{-6}	8.3×10^{-4}	1.08×10^{-1}	7.17x10-I	3.59×10^{-6}

(8) An applicant shall estimate the total corridor risk using the following summation of risk, including a multiplier of two, as shown in equation C 10.

$$\text{Ec(Corridor)} = 2 \cdot \left(\sum_{k=1}^{n} E_{c_k} \right) \qquad \text{(Equation C 10)}$$

(9) Alternative Casualty Expectancy (E_C)Analyses. An applicant may employ specified variations to the analysis defined in subparagraphs (c)(1) - (8). Those variations are identified in subparagraphs (9)(i) through (vi) of this paragraph. Subparagraphs (i) through (iv) permit an applicant to make conservative assumptions that would lead to an overestimation of the corridor E_C compared with the analysis defined in subparagraphs (c)(1) - (8). In subparagraphs (v) and (vi), an applicant that would otherwise fail the analysis prescribed by subparagraphs (c)(1) - (8) may avoid (c)(1) - (8)'s overestimation of the probability of impact in each populated area. An applicant employing a variation shall identify the variation used, show and discuss the specific assumptions made to modify the analysis defined in subparagraphs (c)(1) - (8), and demonstrate how each assumption leads to overestimation of the corridor E_C compared with the analysis defined in subparagraphs (c)(1) - (c)(8).

(i) Assume that P_x and P_y have a value of 1 .O for all populated areas.

(ii) Combine populated areas into one or more larger populated areas. and use a population density for the combined area or areas equal to the most dense populated area.

(iii) For any given populated area, assume P_y has a value of one.

(iv) For any given P_x sector (an area spanning the width of a flight corridor and bounded by two time points on the trajectory IIP ground trace) P_y has a value of one and use a population density for the sector equal to the most dense populated area.

(v) For a given populated area, divide the populated area into smaller rectangles, determine P_i for each individual rectangle, and sum the individual impact probabilities to determine P_i for the entire populated area.

(vi) For a given populated area, use the ratio of the populated area to the area of the P_i rectangle from the subparagraph (c)(1) - (8) analysis.

(d) Evaluation of Results

(1) If the estimated expected casualty does not exceed $30x10^{-6}$, the FAA will approve the launch site location.

(2) If the estimated expected casualty exceeds $30x10^{-6}$, then an applicant may either modify its proposal, or, if the flight corridor used was generated by the appendix A method, use the appendix B method to narrow the flight corridor and then perform another appendix C risk analysis.

Appendix D to Part 420
Impact Dispersion Areas and Casualty Expectancy Estimate for an Unguided Suborbital Launch Vehicle

(a) Introduction

(1) This appendix provides a method for determining the acceptability of the location of a launch point from which an unguided suborbital launch vehicle would be launched. The appendix describes how to define an overflight exclusion zone and impact dispersion areas. and how to evaluate whether the public risk presented by the launch of an unguided suborbital launch vehicle remains at acceptable levels.

(2) An applicant shall base its analysis on an unguided suborbital launch vehicle whose final launch vehicle stage apogee represents the intended use of the launch point.

(3) An applicant shall use the apogee of each stage of an existing unguided suborbital launch vehicle with a final launch vehicle stage apogee equal to the one proposed, and calculate each impact range and dispersion area using the equations provided,

(4) This appendix also provides a method for performing an impact risk analysis that estimates the expected casualty (E,) within each impact dispersion area. This appendix provides an applicant options to simplify the method where population at risk is minimal.

(5) If the E_c is less than or equal to $30x10^{-6}$, the FAA will approve the launch point for unguided suborbital launch vehicles. If the E_c exceeds $30x10^{-6}$, the proposed launch point will fail the launch site location review.

(b) Data Requirements

(1) An applicant shall employ the apogee of each stage of an existing unguided suborbital launch vehicle whose final stage apogee represents the maximum altitude to be reached by unguided suborbital launch vehicles launched from the launch point. The apogee shall be obtained from one or more actual flights of an unguided suborbital launch vehicle launched at an 84 degree elevation.

(2) An applicant shall satisfy the map and plotting data requirements in appendix A, paragraph (b).

(3) Population Data., An applicant shall use total population (N) and the total landmass area within a populated area (A) for all populated areas within an impact dispersion area.. Population data up to and including 100 nm from the launch point are required at the U.S. census block group level. Population data downrange from 100 nm are required at no greater than 1° x 1° latitude/longitude grid coordinates.

(c) Overflight Exclusion Zone and Impact Dispersion Areas

(1) An applicant shall choose a flight azimuth from a launch point.

(2) An applicant shall define an overflight exclusion zone as a circle with a radius of 1600 feet centered on the launch point.

(3) An applicant shall define an impact dispersion area for each stage of the suborbital launch vehicle chosen in subparagraph (b)(1) as provided below:

(i) An applicant shall calculate the impact range for the final launch vehicle stage (D_n). An applicant shall set D_n equal to the last stage apogee altitude (H_n) multiplied by an impact range factor [$IP(H_n)$] as shown below:

$$D_n = H_n \cdot IP(H_n) \qquad \text{(Equation D 1)}$$

where: $IP(H_n)$ = 0.4 for an apogee less than 100 km, and
$IP(H_n)$ = 0.7 for an apogee 100 km or greater.

(ii) An applicant shall calculate the impact range for each intermediate stage (D_i), where $i \in \{1,2,3,\ldots(n-1)\}$, and where n is the total number of launch vehicle stages. Using the apogee altitude (Hi) of each intermediate stage, an applicant shall use equation D1 to compute the impact range of each stage by substituting H_i for H,. An applicant shall use the impact range factors provided in equation D1 .

(iii) An applicant shall calculate the impact dispersion radius for the final launch vehicle stage (R_n). An applicant shall set R_n equal to the last stage apogee altitude (H_n) multiplied by an impact dispersion factor [$DISP(H_n)$] as shown below:

$$R_n = H_n \cdot DISP(H_n) \qquad \text{(Equation D2)}$$

where: $DISP(H_n)$ = 0.4 for an apogee less than 100 km. and
$DISP(H_n)$ = 0.7 for an apogee 100 km or greater.

(iv) An applicant shall calculate the impact dispersion radius for each intermediate stage (R_i), where $i \in \{1,2,3,\ldots (n-1)\}$, and where n is the total number of launch vehicle stages. Using the apogee altitude (Hi) of each intermediate stage, an applicant shall use equation D2 to compute impact dispersion radius of each stage by substituting H_i for H,. An applicant shall use the dispersion factors provided in equation D2.

(4) An applicant shall display an overflight exclusion zone, each intermediate and final stage impact point (D_i through D,), and each impact dispersion area for the intermediate and final launch vehicle stages on maps in accordance with paragraph (b)(2).

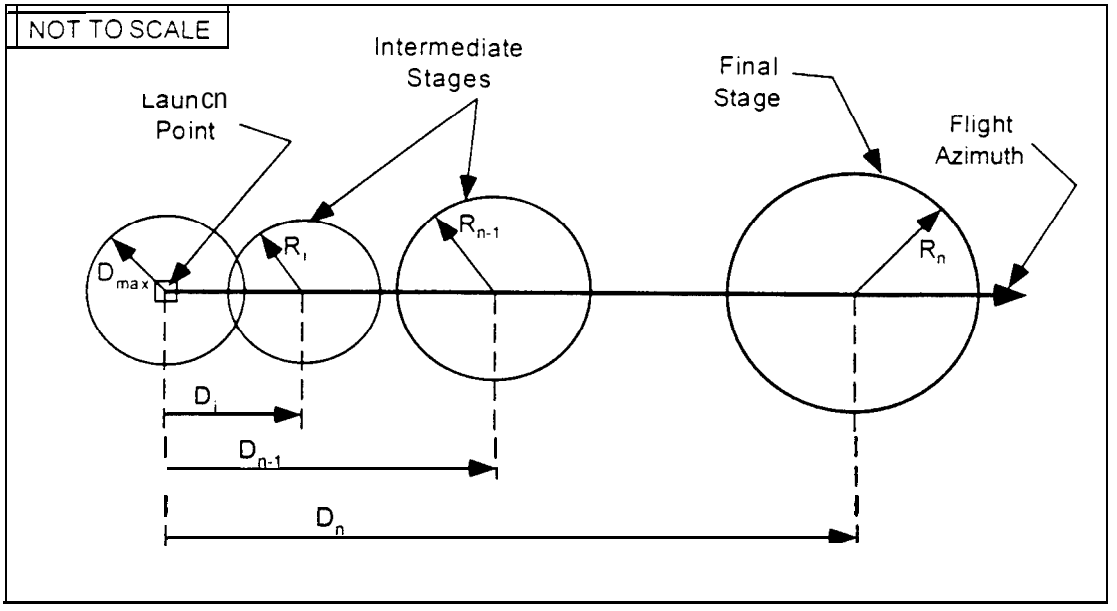

Figure D-l
Unguided Suborbital Launch Vehicle Overflight Exclusion Zone and Impact Dispersion Areas

(d) Evaluate the Overflight Exclusion Zone and Impact Dispersion Areas

(1) An applicant shall evaluate the overflight exclusion zone and each impact dispersion area for the presence of any populated areas. If an applicant determines that no populated area is located within the overflight exclusion zone or any impact dispersion area, then no additional steps are necessary.

(2) If a populated area is located in an overflight exclusion zone, an applicant may modify its proposal or demonstrate that there are times when no people are present or that the applicant has an agreement in place to evacuate the public from the overflight exclusion zone during a launch.

(3) If a populated area is located within any impact dispersion area, an applicant may modify its proposal and define a new overflight exclusion zone and new impact dispersion areas, or perform an impact risk analysis as provided in paragraph (e).

(e) Impact Risk Analysis

(1) An applicant shall estimate the expected average number of casualties, E_C, within the impact dispersion areas according to the following method:

(i) An applicant shall calculate the E_C by summing the impact risk for the impact dispersion areas of the final launch vehicle stage and all intermediate stages. An applicant shall estimate E_c for the impact dispersion area of each stage by using equations D3 through D7 for each of the populated areas located within the impact dispersion areas.

(ii) An applicant shall estimate the probability of impacting inside the X and Y sectors of each populated area within each impact dispersion area using equations D3 and D4 below:

$$P_x = \frac{\left(\frac{x_2}{\sigma_x} - \frac{x_1}{\sigma_x}\right)}{6\sqrt{2\pi}} \left[\exp\left(\frac{-\left(\frac{x_1}{\sigma_x}\right)^2}{2}\right) + 4 \cdot \exp\left[\frac{-\left(\frac{(x_1 + x_2)}{2\sigma_x}\right)^2}{2}\right] + \exp\left(\frac{-\left(\frac{x_2}{\sigma_x}\right)^2}{2}\right)\right]$$

(Equation D3)

where: x_1, x_2 = closest and farthest downrange distance to populated area (see figure D-2)

σ_x = one-fifth of the impact dispersion radius (see figure D-2)

exp = exponential function (e")

$$P_y = \frac{\left(\frac{|y_2|}{\sigma_y} - \frac{|y_1|}{\sigma_y}\right)}{6\sqrt{2\pi}} \left[\exp\left(\frac{-\left(\frac{y_1}{\sigma_y}\right)^2}{2}\right) + 4 \cdot \exp\left[-\frac{\left(\frac{y_1 + y_2}{2\sigma_y}\right)^2}{2}\right] + \exp\left(\frac{-\left(\frac{y_2}{\sigma_y}\right)^2}{2}\right)\right]$$

(Equation D4)

where: y_1, y_2 = closest and farthest cross range distance to the populated area (see figure D-2)

σ_y = one-fifth of the impact dispersion radius (see figure D-2)

exp = exponential function (e^x)

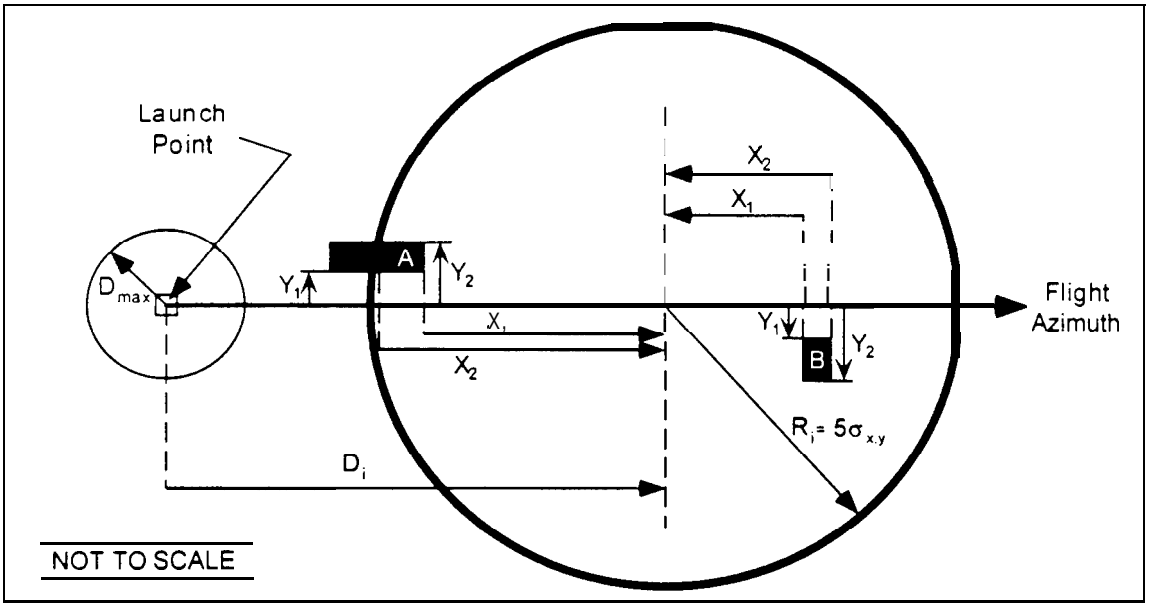

Figure D-2
Intermediate and Final Stage Impact Risk Analysis

(iii) If a populated area intersects the impact dispersion area boundary so that the x_2 or y_2 distance would otherwise extend outside the impact dispersion area, the x_2 or y_2 distance should be set equal to the impact dispersion area radius. The x_2 distance for populated area A in figure D-2 is an example.

(iv) If a populated area intersects the flight azimuth, an applicant shall solve equation D4 by obtaining the solution in two parts. An applicant shall determine, first, the probability between $y_1 = 0$ and $y_2 = a$ and, second, the probability between $y_1 = 0$ and $y_2 = b$, as depicted in figure D-3. The probability P_y is then equal to the sum of the probabilities of the two parts. If a populated area intersects the line that is normal to the flight azimuth on the impact point, an applicant shall solve equation D3 by obtaining the solution in two parts in the same manner as with the values of X.

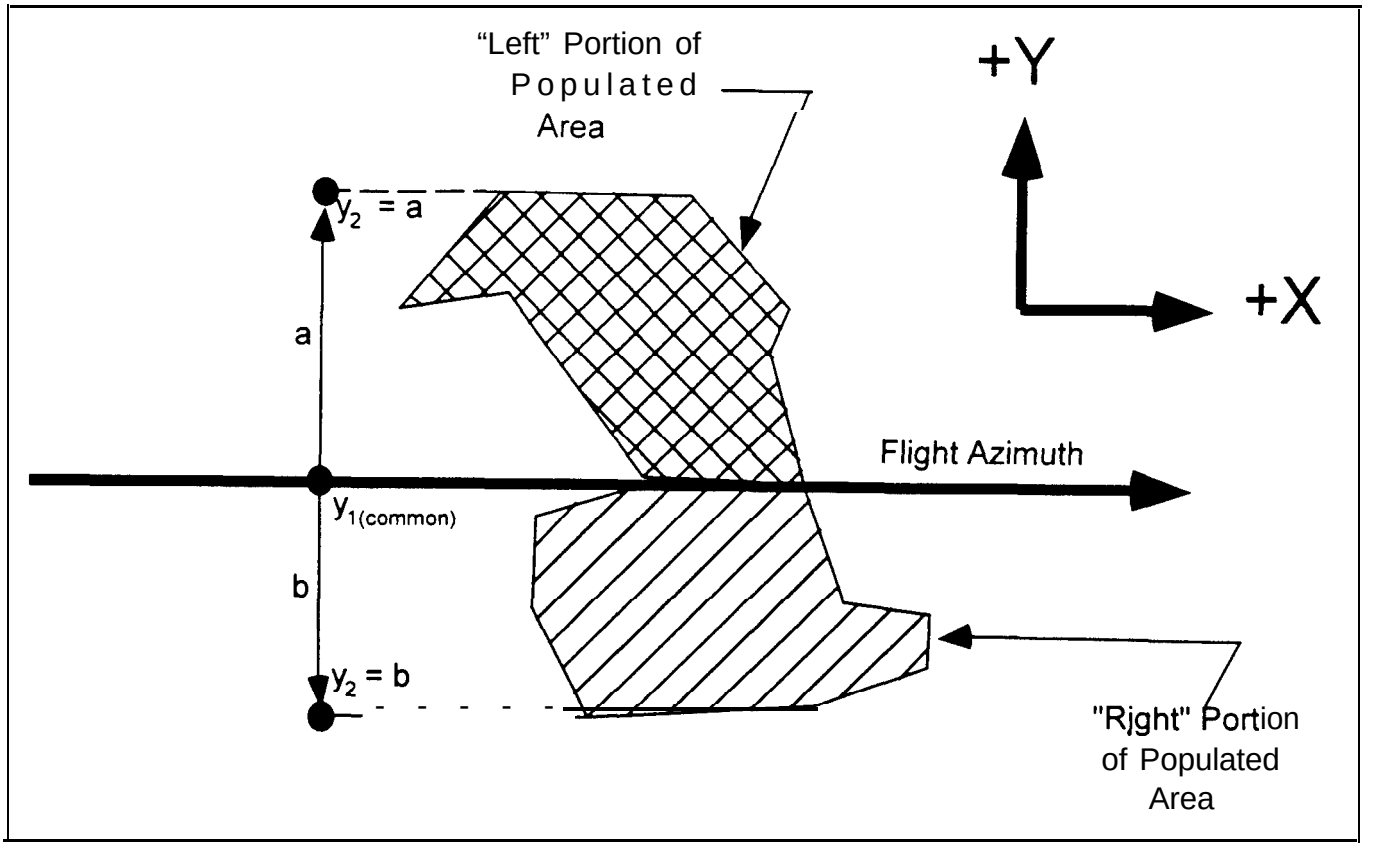

Figure D-3
Flight Azimuth Intersecting a Populated Area

(v) An applicant shall calculate the probability of impact (Pi) for each populated area using the following equation:

$$P_i = P_s \cdot P_x \cdot P_y$$

(Equation D5)

where: P_s = probability of success = 0.98

(vi) An applicant shall calculate the casualty expectancy for each populated area. E_{ck} is the casualty expectancy for a given populated area as shown in equation D6, where individual populated areas are designated with the subscript "k".

$$E_{ck} = P_i \cdot \left(\frac{A_c}{A_k}\right) \cdot N_k$$

(Equation D6)

where: $k \in \{1, 2, 3, \ldots, n\}$

A, = casualty area (from table D-l)

A_k = populated area

N_k = *population in* A_k

Table D-l: Effective Casualty Area(A_c) vs. Impact Range

Impact Range (nm)	Effective Casualty Area (miles')
o - 4	$9x10^{-5}$
5 - 49	$9x10^{-5}$
50 - 1.749	$1.1x10^{-5}$
1.750 - 4,999	$3.6x10^{-6}$
5.000 - more	$3.6x10^{-6}$

(vii) An applicant shall estimate the total risk using the following summation of risk, including a multiplier of five. as shown in equation D7.

$$Ec(Corridor) = 5 \cdot \left(\sum_{k=1}^{n} E_{c_k} \right) \qquad \text{(Equation D7)}$$

(viii) Alternative Casualty Expectancy (E_C)Analysis. An applicant may employ specified variations to the analysis defined in subparagraphs (d)(l)(i) - (vii). Those variations are identified in subparagraphs (viii)(A) through (F) of this paragraph. Subparagraphs (A) through (D) permit an applicant to make conservative assumptions that would lead to an overestimation of E_C compared with the analysis defined in subparagraphs (d)(l)(i) - (vii). In subparagraphs (E) and (F), an applicant that would otherwise fail the analysis prescribed by subparagraphs (d)(l)(i) - (vii) may avoid (d)(l)(i) - (vii)'s overestimation of the probability of impact in each populated area. An applicant employing a variation shall identify the variation used, show and discuss the specific assumptions made to modify the analysis defined in subparagraphs (d)(l)(i) - (vii), and justify how each assumption leads to overestimation of the corridor E_C compared with the analysis defined in subparagraphs (d)(l)(i) - (vii).

(A) Assume that P_x and P_y have a value of 1 .O for all populated areas.

(B) Combine populated areas-into one or more larger populated areas, and use a population density for the combined **area** or areas equal to the most dense populated area.

(C) For any given populated area, assume P_x has a value of one.

(D) For any given populated area, assume P_y has a value of one.

(E) For a given populated area, divide the populated area into smaller rectangles, determine P_i for each individual rectangle, and sum the individual impact probabilities to determine P_i for the entire populated area.

(F) For a given populated area, use the ratio of the populated area to the area of the P_i rectangle from the subparagraph (d)(l)(i) - (vii) analysis.

(3) If the estimated expected casualty does not exceed $30x10^{-6}$, then no additional steps are necessary.

(3) If the estimated expected casualty exceeds $30x10^{-6}$, then an applicant may modify its proposal and then repeat the impact risk analysis per this appendix D. If no set of impact dispersion areas exist which satisfy the FAA‘s risk threshold. the applicant’s proposed launch site will fail the launch site location review.

Appendix E to Part 420
Tables for Explosive Site Plan

Table E-l: Quantity Distance Requirements for Division 1.3 Solid Propellants

Quantity (Ibs.) (Over)	Quantity (lbs.) (Not Over)	Public Area Distance (ft.)	Intraline Distance (ft.)
0	1,000	75	50
1 .000	5,000	115	75
5.000	10,000	150	100
10,000	20,000	190	125
20,000	30,000	215	145
30,000	40,000	235	155
40,000	50,000	250	165
50.000	60,000	260	175
60,000	70,000	270	185
70.000	80,000	280	190
80,000	90,000	195	195
90,000	100,000	300	200
100,000	200,000	375	250
200,000	300,000	450	300
300,000	400.000	525	350
400.000	500,000	600	400
500,000	1,000,000	800	500

Table E-2: Liquid Propellant Explosive Equivalents

Propellant Combinations	Explosive Equivalent
LO_2/LH_2	The larger of : $8W^{2/3}$ where W is the weight of LO2/LH2, or 14% of W
LO_2/LH_2 + LO_2/RP-1	Sum of (20% for LO_2/RP-1) + the larger of: $8W^{2/3}$ where W is the weight of LO2/LH2, or 14% of W
LO_2/RP-1	20% of W up to 500,000 pounds plus 10% of W over 500,000 pounds, where W is the weight of LO2/RP- 1.
N_2O_4/N_2H_4 (or UDMH or UDMH/N_2H_4 Mixture)	10% of W, where W is the weight of the propellant.

Table E-3: Propellant Hazard and Compatibility Groupings and Factors to be Used When Converting Gallons of Propellant into Pounds

Propellant	Hazard Group	Compatibility Group	Pounds/gallon	At temperature °F
Hydrogen Peroxide	II	A	11.6	68
Hydrazine	III	C	8.4	68
Liquid Hydrogen	III	C	0.59	-423
Liquid Oxygen	II	A	9.5	-297
Nitrogen Tetroxide	I	A	12.1	68
RP-1	I	C	6.8	68
UDMH	III	C	6.6	68
UDHM/Hydrazine	III	C	7.5	68

Table E-4: Hazard Croup I

Pounds of Propellant				Pounds of Propellant			
		Public area and incompatible	Intragroup and compatible			Public area and incompatible	lntragroup and compatible
Over	**Not Over**	Distance in feet	Distance in feet	Over	Not Over	Distance in feet	Distance in feet
Column 1	**Column** 2	Column 3	Column 4	Column 1	Column 2	Column 3	Column 4
0	100	30	25	5,000	6,000	80	60
100	200	35	30	6,000	7,000	85	65
200	300	40	35	7,000	8,000	85	65
300	400	45	35	8,000	9,000	90	70
400	500	50	40	9,000	10,000	90	70
500’	600	50	40	10,000	15,000	95	75
600	700	55	40	15,000	20,000	100	80
700	800	55	45	20,000	25,000	105	80
800	900	60	45	25,000	30,000	110	85
900	1,000	60	45	30,000	35,000	110	85
1,000	2,000	65	50	35,000	40,000	115	85
2,000	3,000	70	55	40,000	45,000	120	90
3,000	4,000	75	55	45,000	50,000	120	90
4,000	5,000	80	60	50,000	60,000	125	95

Table E-4 (Continued): Hazard Group I

Pounds of Propellant				Pounds of Propellant			
		Public area and incompatible	Intragroup and compatible			Public area and incompatible	Intragroup and compatible
Over	Not Over	Distance in feet	Distance in feet	Over	Not Over	Distance in feet	Distance in feet
Column 1	Column 2	Column 3	Column 4	Column 1	Column 2	Column 3	Column 4
60,000	70,000	130	95	500,00	600,000	185	140
70,000	80,000	130	100	600,000	700,000	190	145
80,000	90,000	135	100	700,000	800,000	195	150
90,000	100,000	135	105	800,000	900,000	200	150
100,000	125,000	140	110	900,000	1,000,000	205	155
125,000	150,000	145	110	1,000,000	2,000,000	235	175
150,000	175,000	150	115	2,000,000	3,000,000	255	190
175,000	200,000	155	115	3,000,000	4,000,000	265	200
200,000	250,000	160	120	4,000,000	5,000,000	275	210
250,000	300,000	165	125	5,000,000	6,000,000	285	215
300,000	350,000	170	130	6,000,000	7,000,000	295	220
350,000	400,000	175	130	7,000,000	8,000,000	300	225
400,000	450,000	180	135	8,000,000	9,000,000	305	230
450,000	500,000	180	135	9,000,000	10,000,000	310	235

Table E-S: Hazard Group II

Pounds of propellant		Public area and Incompadble	Intragroup and compatible	Pounds of propellam		Public area and incompatible	Intragroup and compatible
Over	Not Over	Distance In feet	Distance In feet	Over	Not Over	Distance In feet	Distance in feet
Column I	Column 2	Column 3	Column 4	Column I	Column 2	Column 3	Column 4
0	100	60	30	10,000	15,000	195	95
Ioo	200	75	35	15,000	20,000	205	100
200	300	85	40	20,000	25,000	215	105
300	400	90	45	25,000	30,000	220	110
400	500	100	50	30,000	35,000	225	I IO
500	600	100	50	35,000	40,000	230	115
600	700	105	55	40,000	45,000	235	120
700	800	110	55	45,000	50,000	240	120
800	900	115	60	50,000	60,000	250	125
900	1,000	120	60	60,000	70,000	255	130
1,000	2,000	130	65	70,000	80,000	260	130
2,000	3,000	145	70	80,000	90,000	265	135
3,000	4,000	150	75	90,000	100,000	270	135
4,000	5,000	160	80	I 00,000	125,000	205	140
5,000	6,000	165	80	125,000	150,000	295	145
6,000	7,000	170	85	150,000	175,000	305	150
7,000	8,000	175	85	175,000	200,000	310	155
8,000	9,000	175	90	200,000	250,000	320	160
9,000	10,000	180	90	250,000	300,000	330	165

Table E-5 (continued): Hazard Group II

Pounds of propellant		Public area and incompatible	Intragroup and compadble	Pounds of propellant		Public area and incompatible	Intragroup and compatible
Over	Not Over	Distance in feet	Distance in feet	Over	Not Over	Distance in feet	Distance in feet
Column 1	Column 2	Column 3	Column 4	Column 1	Column 2	Column 3	Column 4
300,000	350,000	340	170	1,000,000	2,000,000	470	235
350,000	400,000	350	175	2,000,000	3,000,000	505	255
400,000	450,000	355	180	3,000,000	4,000,000	535	265
450,000	500,000	360	180	4,000,000	5,000,000	555	275
500,000	600,000	375	185	5,000,000	6,000,000	570	285
600,000	700,000	385	190	6,000,000	7,000,000	585	295
700,000	800,000	395	195	7,000,000	8,000,000	600	300
800,000	900,000	405	200	8,000,000	9,000,000	610	305
900,000	1,000,000	410	205	9,000,000	10,000,000	620	310

Table E-6: Hazard Group 111

Pounds of Propellant		Public area and incompatible - Distance in feet	Intragroup and compatible - Distance in feet
Over	Not Over		
Column 1	Column 2	Column 3	Column 4
0	100	600	30
100	200	600	35
200	300	600	40
300	400	600	45
400	500	600	50
500	600	600	50
600	700	600	55
700	800	600	55
800	900	600	60
900	1,000	600	60
1,000	2,000	600	65
2,000	3,000	600	70
3,000	4,000	600	75
4,000	5,000	600	80
5,000	6,000	600	80
6,000	7,000	600	85
7,000	8,000	600	85
8,000	9,000	600	90
9,000	10,000	600	90
10,000	15,000	1,200	95
15,000	20,000	1,200	100
20,000	25,000	1,200	105
25,000	30,000	1,200	110
30,000	35,000	1,200	110

Table E-6 (continued): Hazard Group 111

Pounds of Propellant		Public area and incompatible - Distance in feet	Intragroup and compatible - Distance in feet
Over	Not Over		
Column 1	Column 2	Column 3	Column 4
35,000	40,000	1,200	115
40,000	45,000	1,200	120
45,000	50,000	1,200	120
50,000	60,000	1,200	125
60,000	70,000	1,200	130
70,000	80,000	1,200	130
80,000	90,000	1,200	135
90,000	100,000	1,200	135
100,000	125,000	1,800	140
125,000	150,000	1,800	145
150,000	175,000	1,800	150
175,000	200,000	1,800	155
200,000	250,000	1,800	160
250,000	300,000	1,800	165
300,000	350,000	1,800	170
350,000	400,000	1,800	175
400,000	450,000	1,800	180
450,000	500,000	1,800	180
500,000	600,000	1,800	185
600,000	700,000	1,800	190
700,000	800,000	1,800	195
800,000	900,000	1,800	200
900,000	1 ,000,000	1,800	205
I ,000,000	2,000,000	1,800	235

Table E-6 (continued): Hazard Group 111

Pounds of Propellant		Public area and incompatible - Distance in feet	Intragroup and compatible - Distance in feet
Over	Not Over		
Column 1	Column 2	Column 3	Column 4
2,000,000	3,000,000	1,800	255
3,000,000	4,000,000	1,800	265
4,000,000	5,000,000	1,800	275
5,000,000	6,000,000	1,800	285
6,000,000	7,000,000	1,800	295
7,000,000	8,000,000	1,800	300
8,000,000	9,000,000	1,800	305
9,000,000	10,000,000	1,800	310

Table E-7: Distances When Explosive Equivalents Apply

TNT Equivalent Weight of Propellants	Distance in feet	
	To Public Area	Intraline
Column 1	Column 2	Column 3
Not Over		Unbarricaded
100	1250	80
200	1250	100
300	1250	120
400	1250	130
500	1250	140
600	1250	150
700	1250	160
800	1250	170
900	1250	180
1,000	1250	190
1,500	1250	210
2,000	1250	230
3,000	1250	260
4,000	1250	280
5,000	1250	300
6,000	1250	320
7,000	1250	340
8,000	1250	360
9,000	1250	380
10,000	1250	400
15,000	1250	450
20,000	1250	490

Table E-7 (continued): Distances When Explosive Equivalents Apply

TNT Equivalent Weight of Propellants	Distance in feet	
	To Public Area	Intraline
Column 1	Column 2	Column 3
Not Over		Unbarricaded
25,000	1,250	530
30,000	1,250	560
35,000	1,310	590
40,000	1,370	620
45,000	1,425	640
50,000	1,475	660
55,000	1,520	680
60,000	1,565	700
65,000	1,610	720
70,000	1,650	740
75,000	1,685	770
80,000	1,725	780
85,000	1,760	790
90,000	1,795	800
95,000	1,825	820
100,000	1,855	830
125,000	2,115	900
150,000	2,350	950
175,000	2,565	1,000
200,000	2,770	1,050