REVISION RECORD			
REV.	DESCRIPTION	DATE	BY
A	NHTSA PART 575 NPRM RELEASE	7/30/04	DW

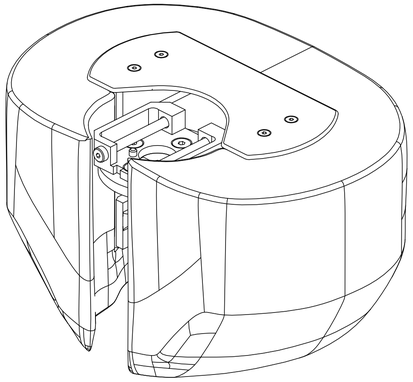

SCALE 0.50

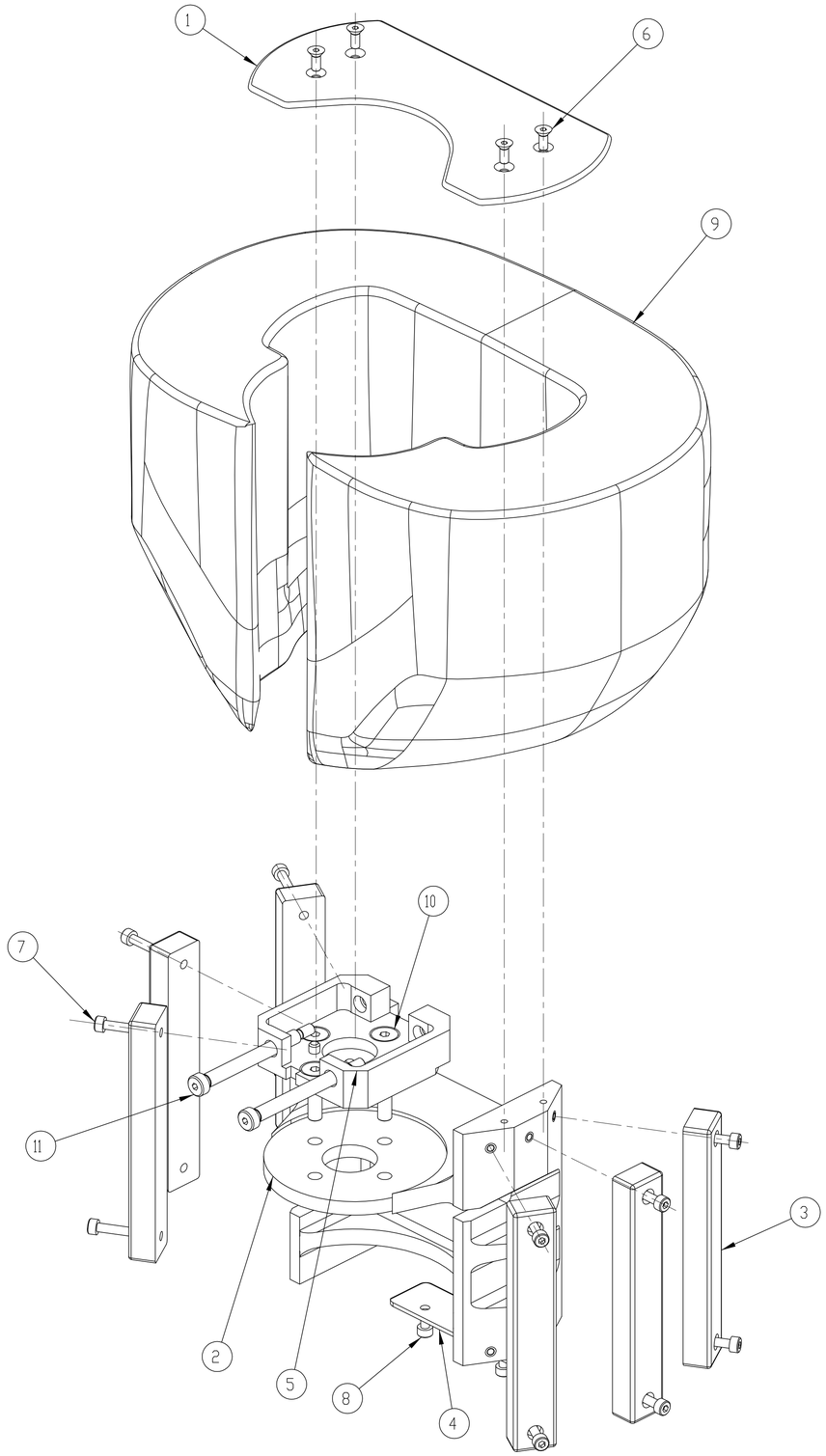

SCALE 0.75

ITEM NO.	QTY	PART NO.	DESCRIPTION
11	2	5000089	SCREW, SHSS M8 X 60
10	4	9000591	SCREW, FHCS 1/4-20 X 1
9	1	175-5010	ABDOMEN MOLDED ASSEMBLY, CERTIFIED
8	2	5000024	SCREW, SHCS M4 X .7 X 8
7	12	5000025	SCREW, SHCS M4 X .7 X 16
6	4	5000023	SCREW, FHCS M4 X 0.7 X 10
5	1	175-5005	BASE ADAPTER, T-12
4	1	175-5004	LATCHING PLATE
3	6	175-5003	ABDOMEN LOADCELL STRUCTURAL REPLACEMENT
2	1	175-5002	ABDOMINAL DRUM
1	1	175-5001	COVER PLATE

PART LIST

UNITS ARE millimeters

TOLERANCES ARE: *

DECIMALS:
X ±0.5
.X ±0.1
.XX ±0.05

ANGLES: ±0.5°

MACHINED: 63

* unless otherwise noted

MATERIAL

SCALE 0.750

APPROVALS	DATE
DRAWN	
CHECKED	
ENGINEER	

NATIONAL HIGHWAY TRAFFIC SAFETY ADMINISTRATION

ABDOMINAL ASSEMBLY

SIZE	SHEET	DRAWING NUMBER	REV.
A1	1 OF 1	175-5000	A

REVISION RECORD			
REV.	DESCRIPTION	DATE	BY
A	NHTSA PART 575 NPRM RELEASE	7/30/04	DW

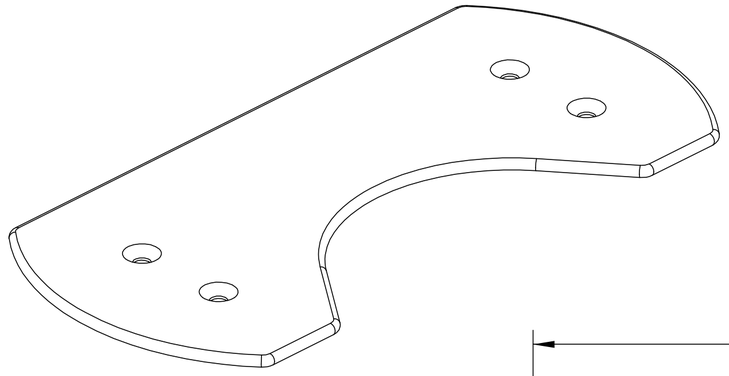

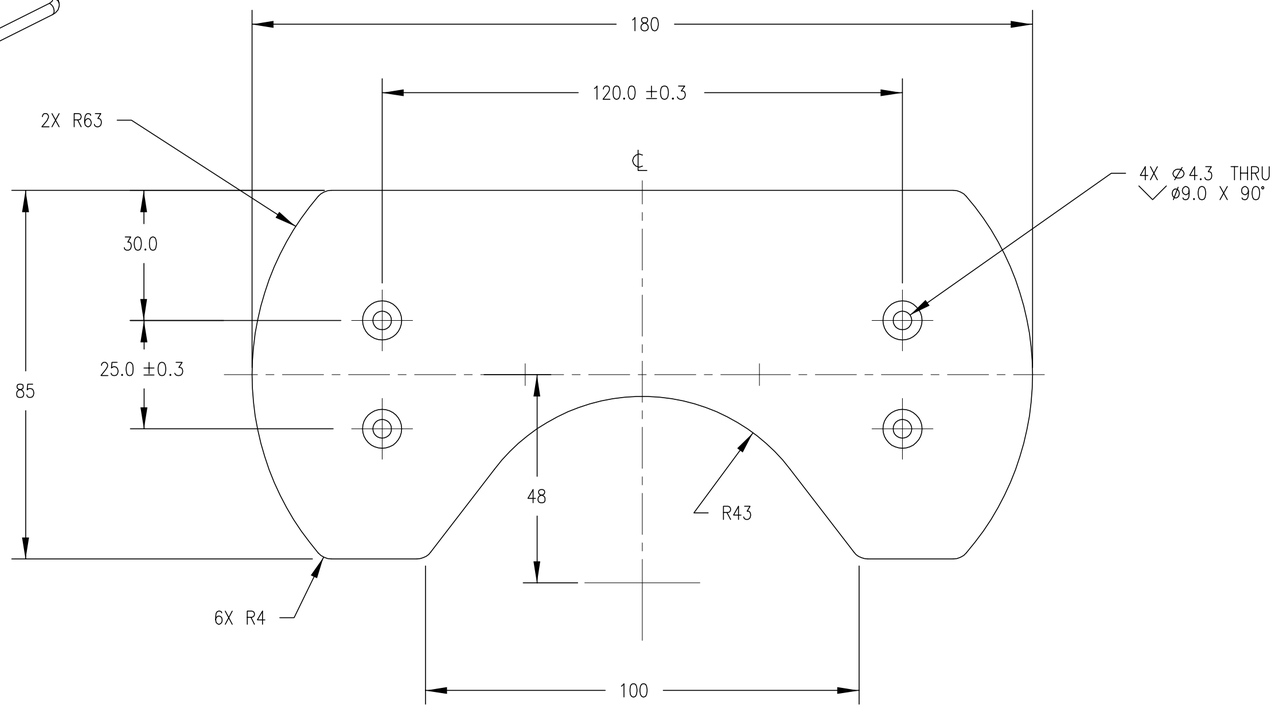

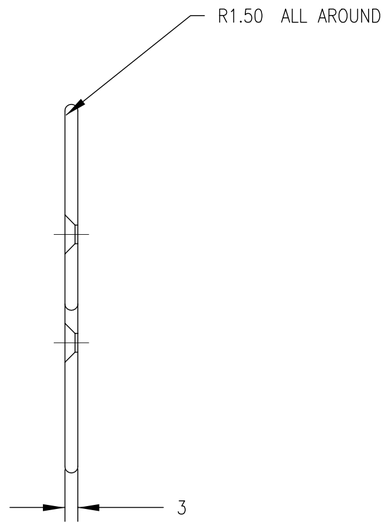

NOTES:

1. REMOVE ALL BURRS AND BREAK SHARP EDGES.
2. ALL SURFACE FINISH SHALL NOT EXCEED 0.8

ITEM NO.	QTY	PART NO.	DESCRIPTION

PART LIST

UNITS ARE millimeters

TOLERANCES ARE: *

DECIMALS:
X ±0.5
.X ±0.1
.XX ±0.05

ANGLES: ±0.5°

MACHINED: 63

* unless otherwise noted

MATERIAL: SS 304

SCALE: 1.000

APPROVALS	DATE
DRAWN	
CHECKED	
ENGINEER	

NATIONAL HIGHWAY TRAFFIC SAFETY ADMINISTRATION

COVER PLATE

SIZE	SHEET	DRAWING NUMBER	REV.
A2	1 OF 1	175-5001	A

REVISION RECORD			
REV.	DESCRIPTION	DATE	BY
A	NHTSA PART 575 NPRM RELEASE	7/30/04	DW

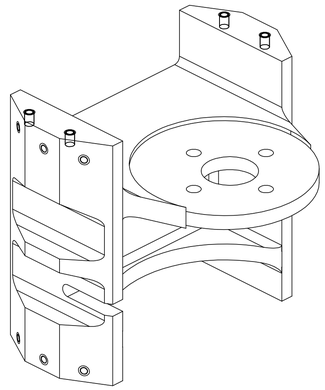

SCALE 0.750

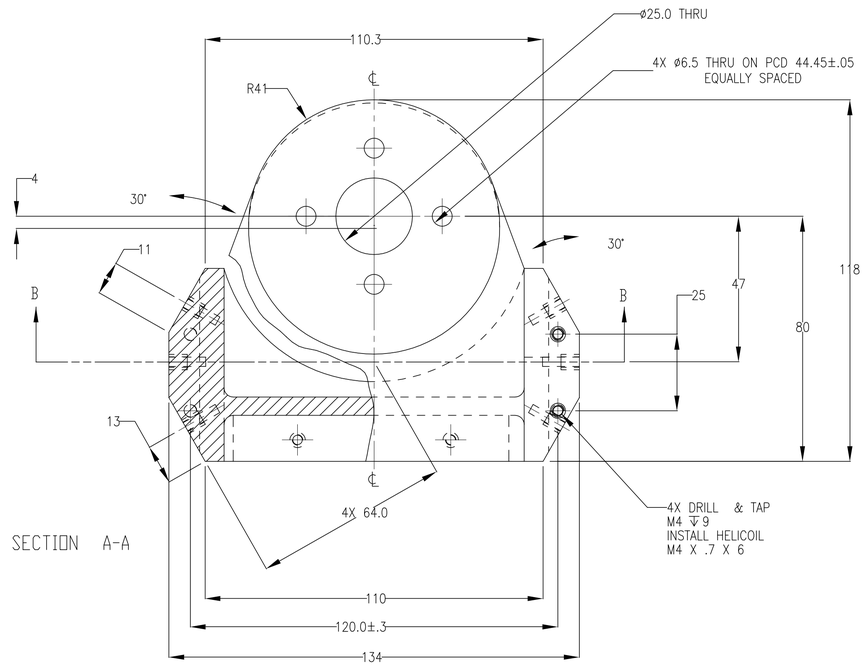

SECTION A-A

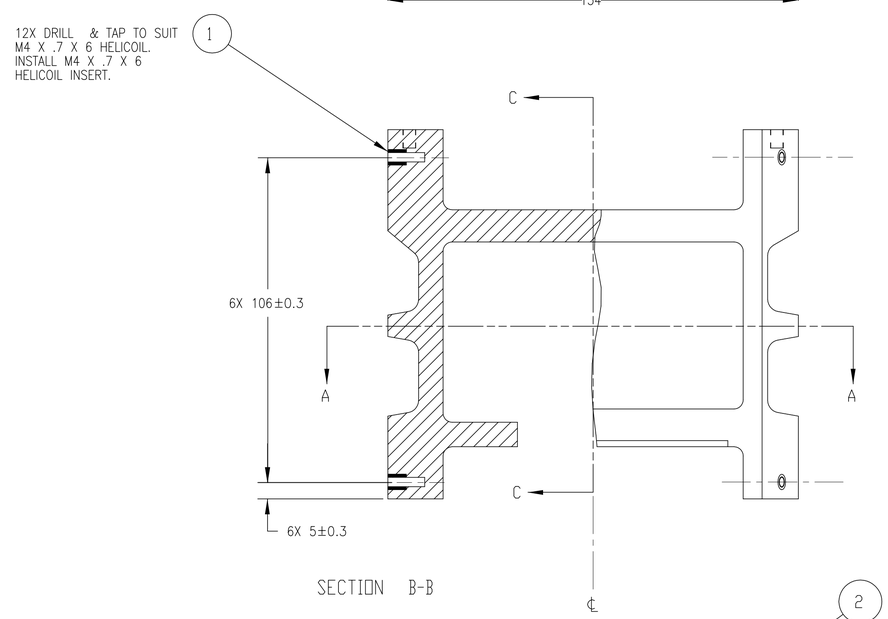

SECTION B-B

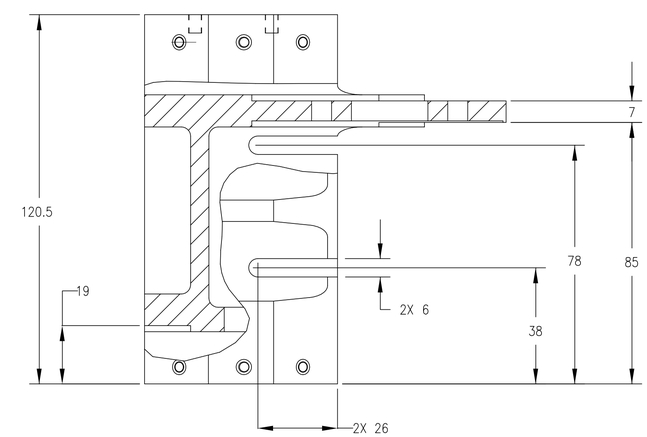

SECTION C-C

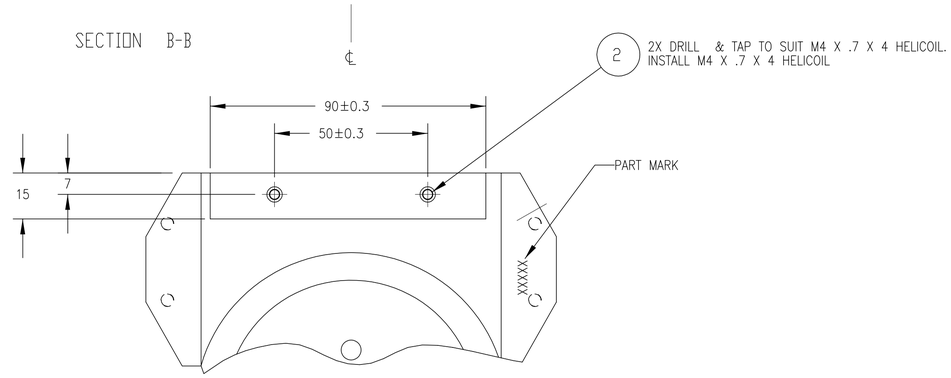

NOTES:

1. REMOVE ALL BURRS AND BREAK SHARP EDGES.

ITEM NO.	QTY	PART NO.	DESCRIPTION
2	2	5000352	HELICOIL, M4 X .7 X 4
1	16	5000350	HELICOIL, M4 X .7 X 6

PART LIST

UNITS ARE millimeters

TOLERANCES ARE: *

DECIMALS: X ±0.5, .X ±0.1, .XX ±0.05

ANGLES: ±0.5°

MACHINED: 63

* unless otherwise noted

MATERIAL: CAST ALUMINUM 226

SCALE: 1.000

APPROVALS	DATE
DRAWN	
CHECKED	
ENGINEER	

NATIONAL HIGHWAY TRAFFIC SAFETY ADMINISTRATION

ABDOMINAL DRUM

SIZE	SHEET	DRAWING NUMBER	REV.
A1	1 OF 1	175-5002	A

REV.	REVISION RECORD		
REV.	DESCRIPTION	DATE	BY
A	NHTSA PART 575 NPRM RELEASE	7/30/04	DW

REV. A

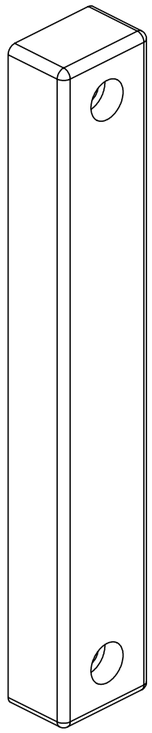

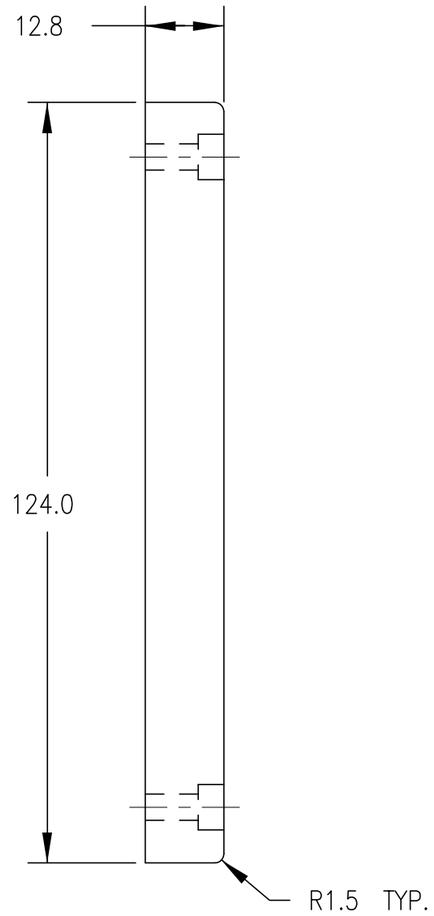

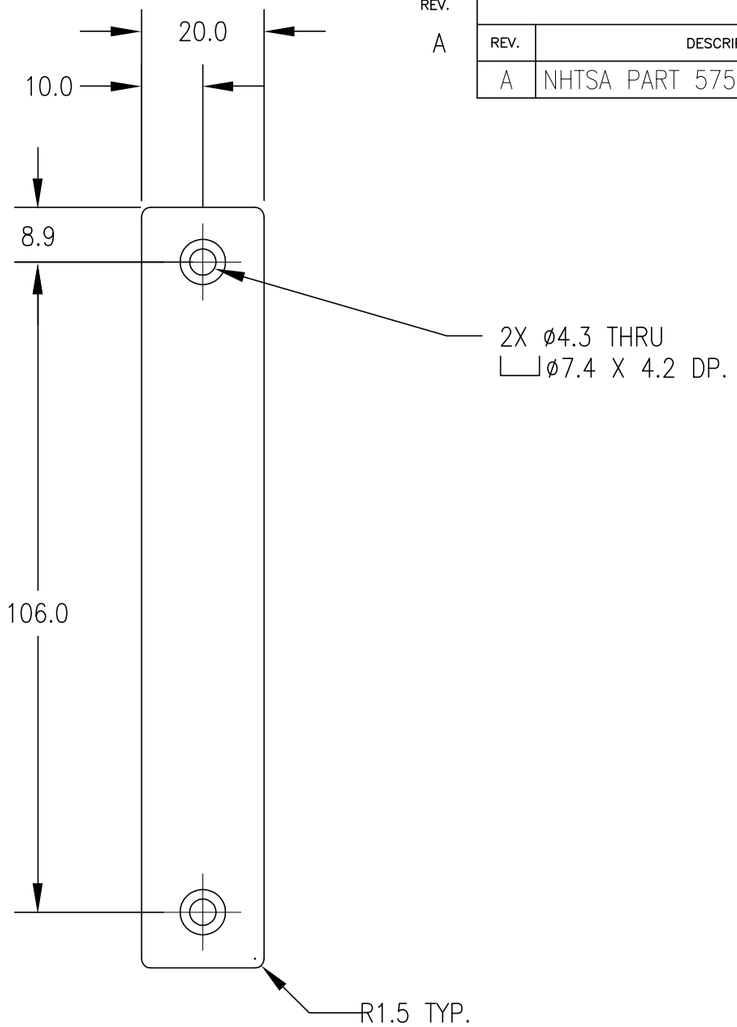

NOTES:

1. REMOVE ALL BURRS AND BREAK SHARP EDGES.
2. ALL SURFACE FINISH SHALL NOT EXCEED 0.8

ITEM NO.	QTY	PART NO.	DESCRIPTION

PART LIST

UNITS ARE millimeters

TOLERANCES ARE: *

DECIMALS:
X ±0.5
.X ±0.1
.XX ±0.05

ANGLES: ±0.5°

MACHINED: 63

* unless otherwise noted

MATERIAL: ALUM. 6082

SCALE: 1.000

APPROVALS	DATE
DRAWN	
CHECKED	
ENGINEER	

NATIONAL HIGHWAY TRAFFIC SAFETY ADMINISTRATION

ABDOMEN LOADCELL

STRUCTURAL REPLACEMENT

SIZE	SHEET	DRAWING NUMBER	REV.
A3	1 OF 1	175-5003	A

REVISION RECORD			
REV.	DESCRIPTION	DATE	BY
A	NHTSA PART 575 NPRM RELEASE	7/30/04	DW

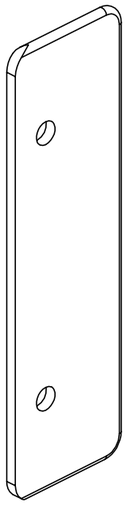

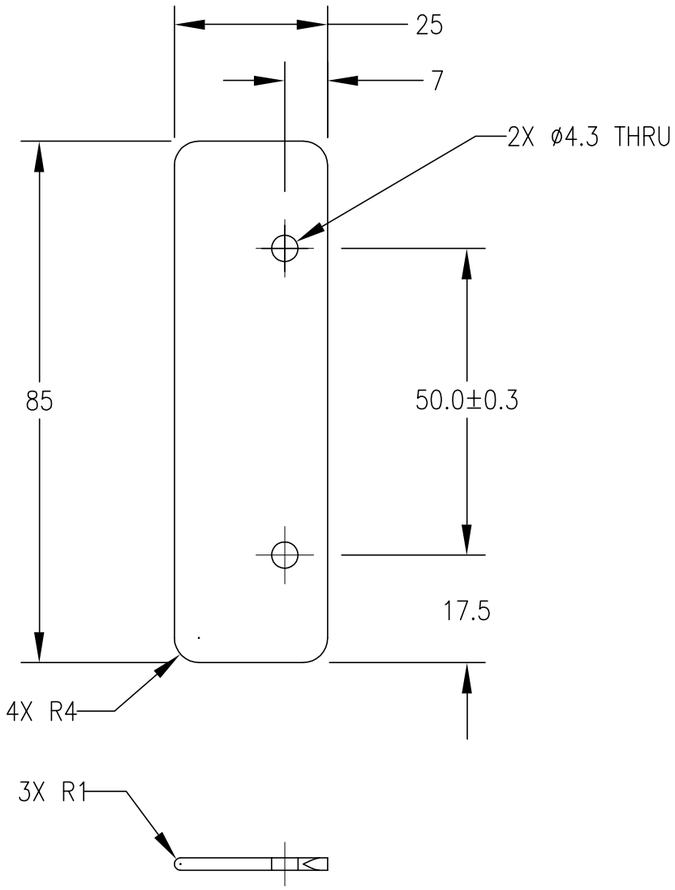

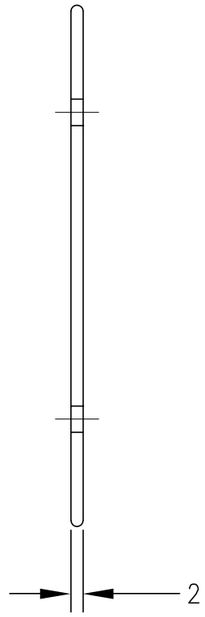

NOTES:

1. REMOVE ALL BURRS AND BREAK SHARP EDGES.
2. ALL SURFACE FINSIH SHALL NOT EXCEED 0.8

ITEM NO.	QTY	PART NO.	DESCRIPTION

PART LIST

UNITS ARE millimeters

TOLERANCES ARE: *

DECIMALS:
X ±0.5
.X ±0.1
.XX ±0.05

ANGLES: ±0.5°

MACHINED: 63

* unless otherwise noted

MATERIAL	AISI-304	
SCALE	1.000	
APPROVALS		DATE
DRAWN		
CHECKED		
ENGINEER		

NATIONAL HIGHWAY TRAFFIC SAFETY ADMINISTRATION

LATCHING PLATE

SIZE	SHEET	DRAWING NUMBER	REV.
A3	1 OF 1	175-5004	A

REVISION RECORD			
REV.	DESCRIPTION	DATE	BY
A	NHTSA PART 575 NPRM RELEASE	7/30/04	DW

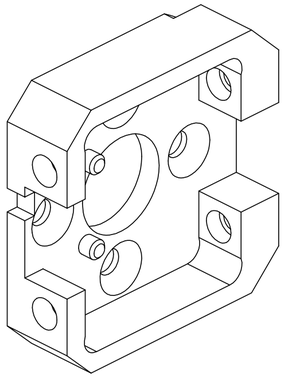

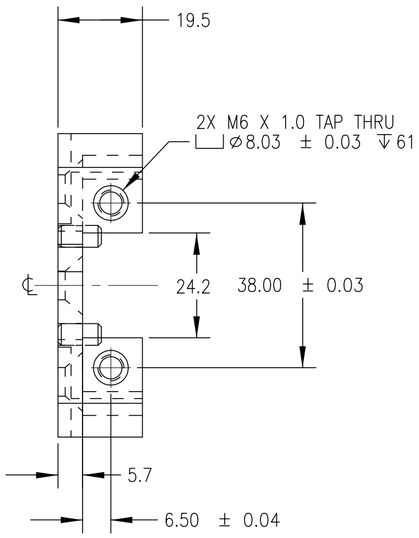

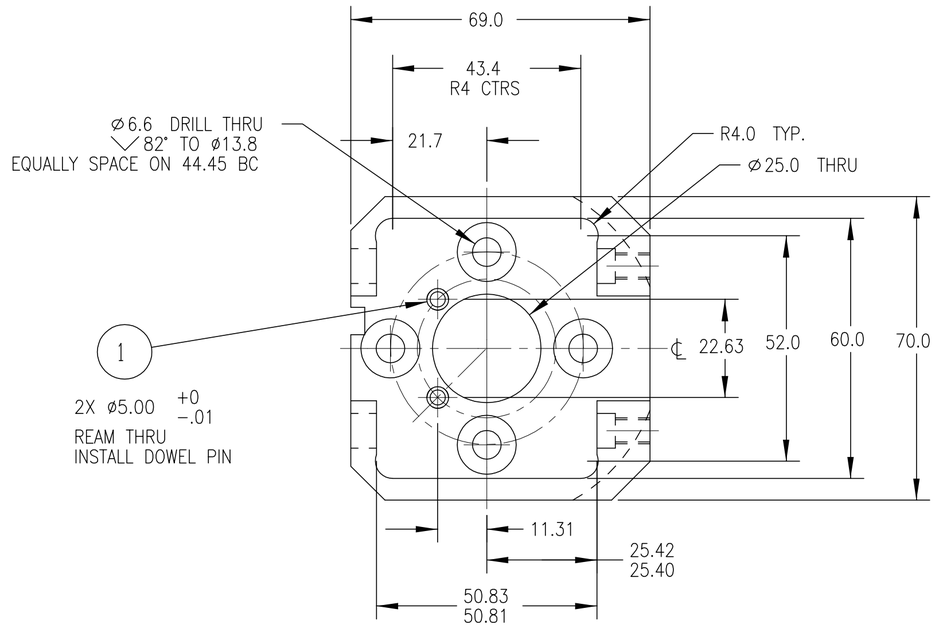

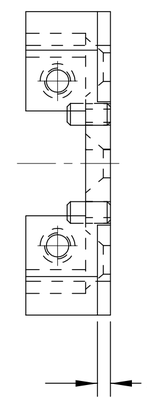

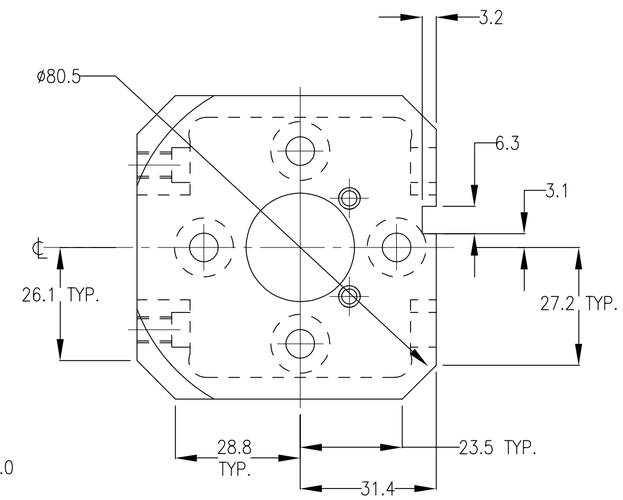

NOTES:

1. MATERIAL: 4140 TOOL STEEL
   PRE-HEAT TREAT Rc 38-42 BEFORE MACHINING.
2. FINISH: BLACK OXIDE
3. REMOVE ALL BURRS AND BREAK ALL SHARP EDGES.

ITEM NO.	QTY	PART NO.	DESCRIPTION
1	2	5000280	PIN, DOWEL M5 X 10

PART LIST

UNITS ARE millimeters

TOLERANCES ARE: *

DECIMALS:
X ±0.5
.X ±0.1
.XX ±0.05

ANGLES: ±0.5°

MACHINED: 63

* unless otherwise noted

MATERIAL: 4140 TOOL STEEL

SCALE: 1.000

APPROVALS	DATE
DRAWN	
CHECKED	
ENGINEER	

NATIONAL HIGHWAY TRAFFIC SAFETY ADMINISTRATION

BASE ADAPTER, T-12

SIZE	SHEET	DRAWING NUMBER	REV.
A2	1 OF 1	175-5005	A

REVISION RECORD			
REV.	DESCRIPTION	DATE	BY
A	NHTSA PART 575 NPRM RELEASE	7/30/04	DW

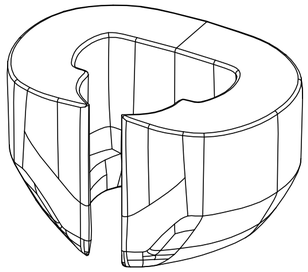

SCALE 0.250

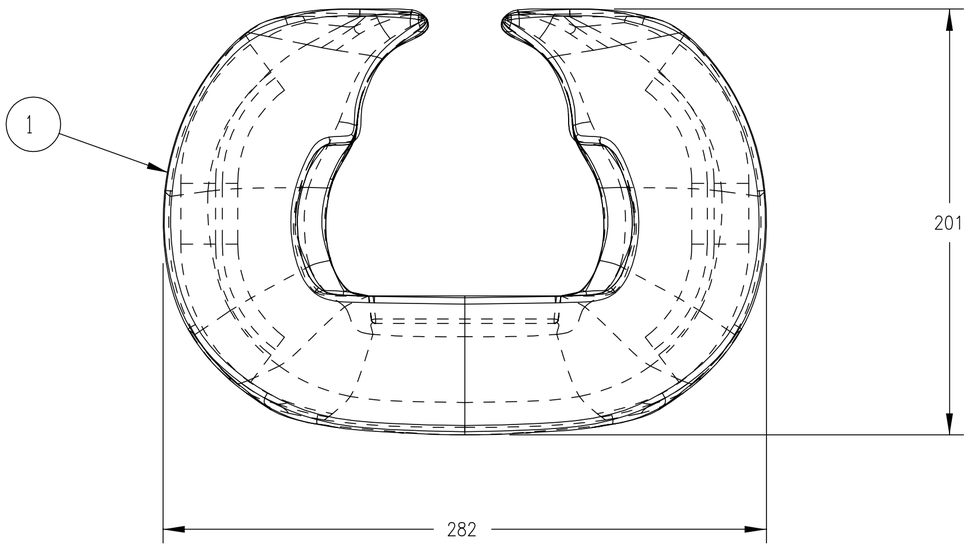

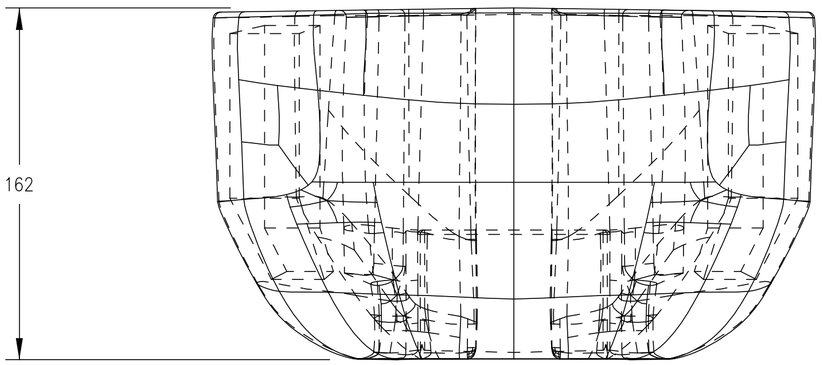

NOTES:

1. EUROSID ABDOMEN MOLDED ASSEMBLY (175–5011) TESTED AND CERTIFIED TO THE LATEST EUROSID–2 SPECIFICATION.
2. MATERIAL: POLYURETHANE.
3. UNLESS OTHERWISE SPECIFIED, ALL DIMENSIONS ARE ±3MM.

ITEM NO.	QTY	PART NO.	DESCRIPTION
1	1	175–5011	ABDOMEN MOLDED ASSEMBLY

PART LIST

UNITS ARE millimeters

TOLERANCES ARE: *

DECIMALS:
X ±0.5
.X ±0.1
.XX ±0.05

ANGLES: ±0.5°

MACHINED: 63

* unless otherwise noted

MATERIAL: SEE NOTES

SCALE: 0.500

APPROVALS	DATE
DRAWN	
CHECKED	
ENGINEER	

NATIONAL HIGHWAY TRAFFIC SAFETY ADMINISTRATION

ABDOMEN MOLDED ASSEMBLY, CERTIFIED

SIZE	SHEET	DRAWING NUMBER	REV.
A2	1 OF 1	175–5010	A

REVISION RECORD			
REV.	DESCRIPTION	DATE	BY
A	NHTSA PART 575 NPRM RELEASE	7/30/04	DW

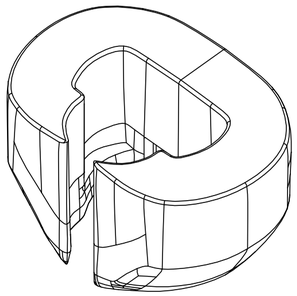

SCALE 0.250

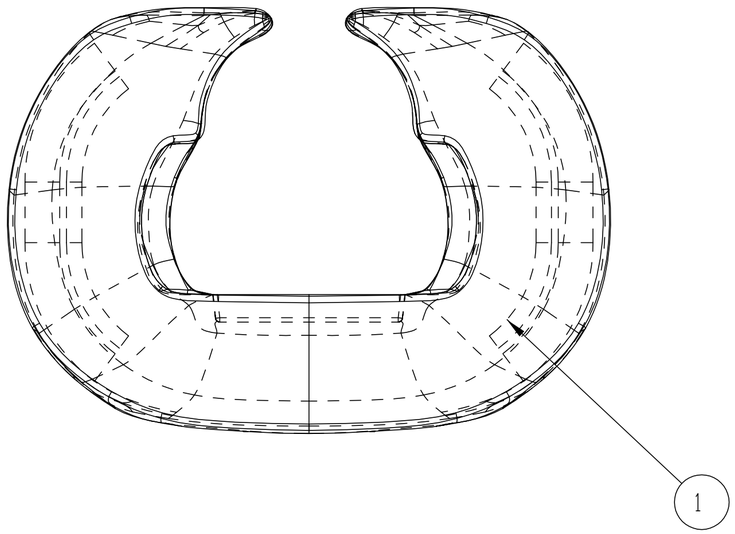

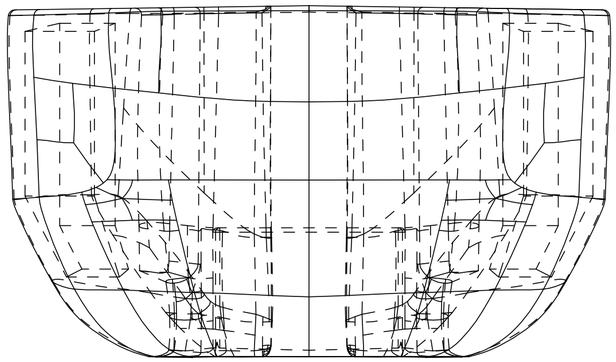

NOTES:

1. MATERIAL: POLYURETHANE
2. TOLERANCE OF +/- 2 MM APPLIED TO ALL DIMENSIONS

ITEM NO.	QTY	PART NO.	DESCRIPTION
1	2	175-5012	BALLAST, LEAD

PART LIST

UNITS ARE millimeters

TOLERANCES ARE: *

DECIMALS:
X ±0.5
.X ±0.1
.XX ±0.05

ANGLES: ±0.5°

MACHINED: 63

* unless otherwise noted

MATERIAL: SEE NOTE 1

SCALE: 0.500

APPROVALS	DATE
DRAWN	
CHECKED	
ENGINEER	

NATIONAL HIGHWAY TRAFFIC SAFETY ADMINISTRATION

ABDOMEN MOLDED ASSEMBLY

SIZE	SHEET	DRAWING NUMBER	REV.
A2	1 OF 1	175-5011	A

REVISION RECORD			
REV.	DESCRIPTION	DATE	BY
A	NHTSA PART 575 NPRM RELEASE	7/30/04	DW

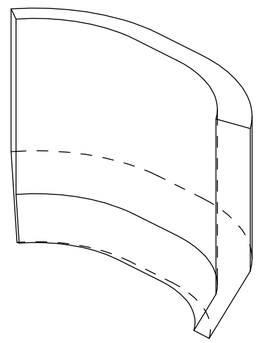

SCALE 0.500

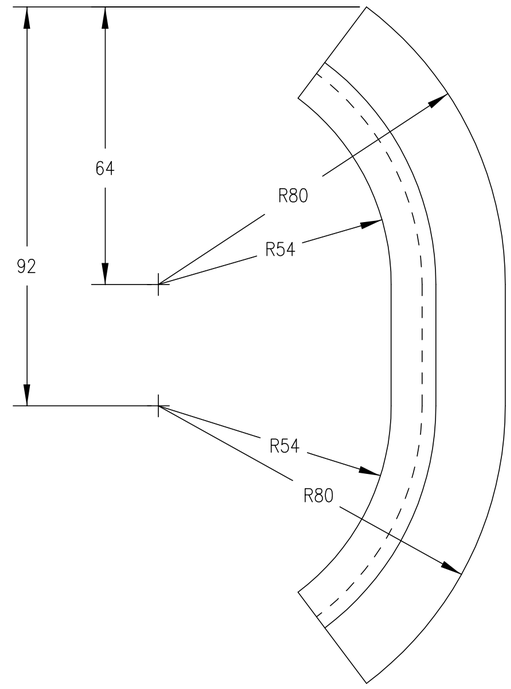

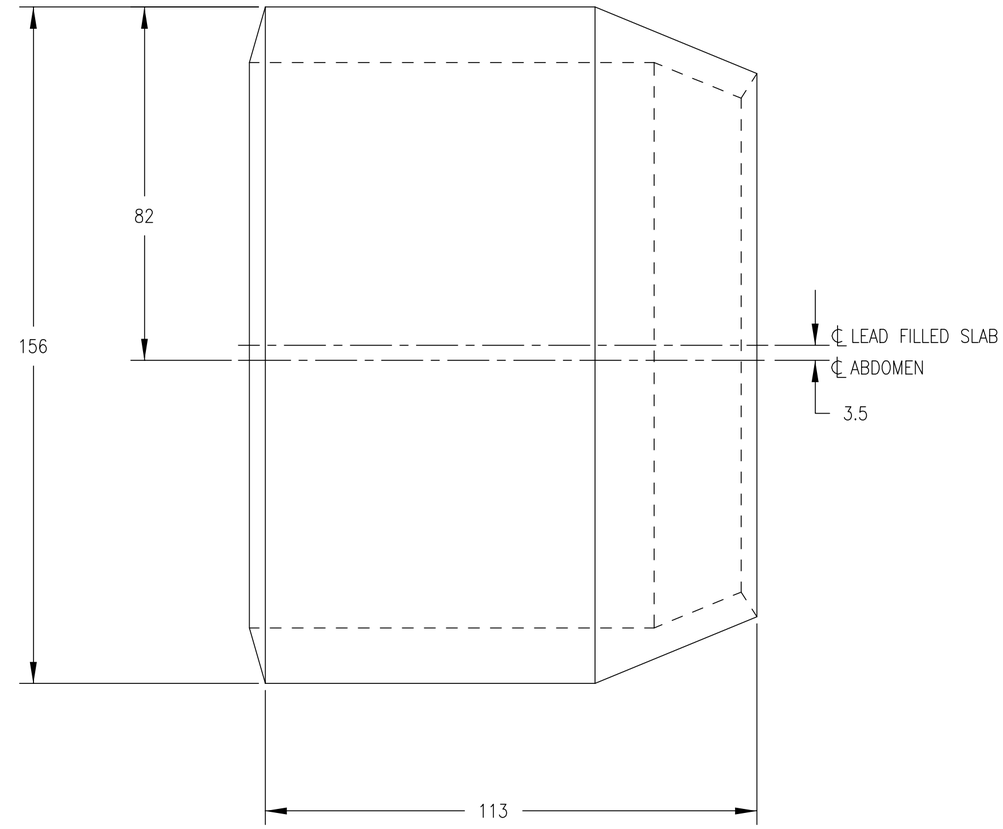

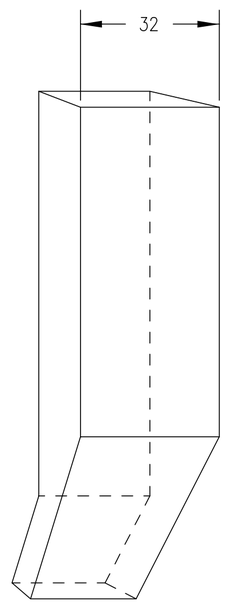

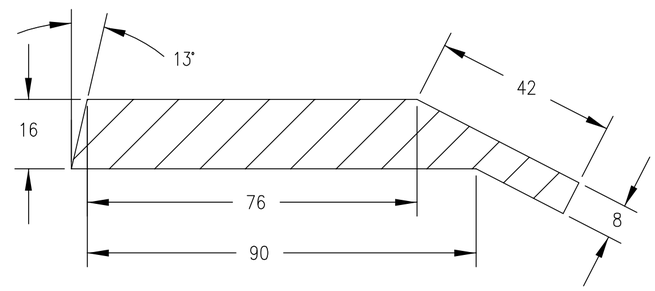

SECTION C–C

ITEM NO.	QTY	PART NO.	DESCRIPTION

PART LIST

UNITS ARE millimeters

TOLERANCES ARE: *

DECIMALS:
X ±0.5
.X ±0.1
.XX ±0.05

ANGLES: ±0.5°

MACHINED: 63

* unless otherwise noted

MATERIAL: LEAD/POLYURETHANE

SCALE: 1.000

APPROVALS	DATE
DRAWN	
CHECKED	
ENGINEER	

NATIONAL HIGHWAY TRAFFIC SAFETY ADMINISTRATION

BALLAST, LEAD

SIZE	SHEET	DRAWING NUMBER	REV.
A2	1 OF 1	175-5012	A

NOTES:

1. TOLERANCE OF +/- 2 MM APPLIED TO ALL DIMENSIONS

REVISION RECORD			
REV.	DESCRIPTION	DATE	BY
A	NHTSA PART 575 NPRM RELEASE	7/30/04	DW

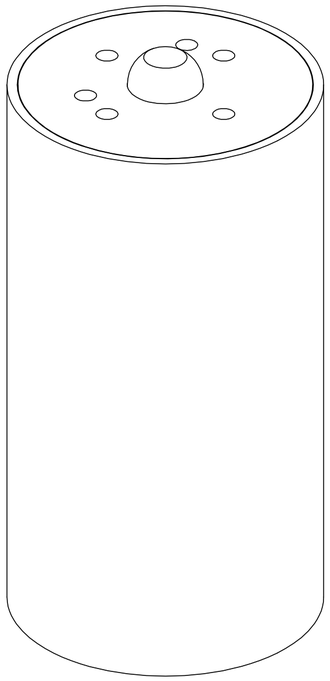

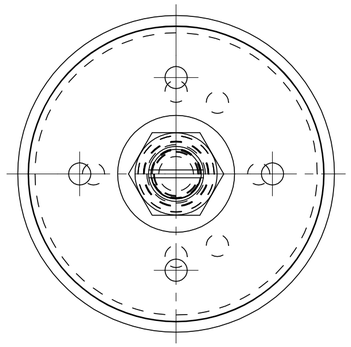

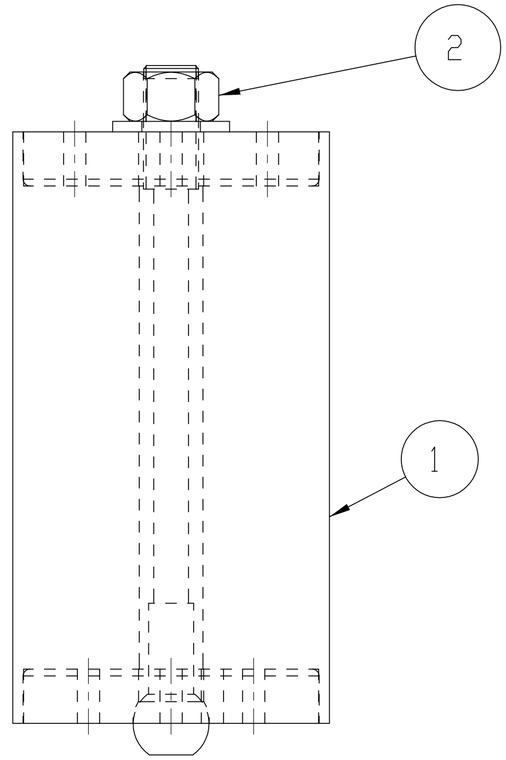

NOTES:

1. HAND TIGHTEN NUT.
2. TENSION CABLE PRIOR TO CERTIFICATION ACCORDING TO THE USER'S MANUAL.

ITEM NO.	QTY	PART NO.	DESCRIPTION
2	1	175–5505	LUMBAR CABLE ASSEMBLY
1	1	175–5501	LUMBAR SPINE, MOLDED

PART LIST

UNITS ARE millimeters

TOLERANCES ARE: *

DECIMALS:
X ±0.5
.X ±0.1
.XX ±0.05

ANGLES: ±0.5°

MACHINED: 63

* unless otherwise noted

MATERIAL

SCALE 1.000

APPROVALS	DATE
DRAWN	
CHECKED	
ENGINEER	

NATIONAL HIGHWAY TRAFFIC SAFETY ADMINISTRATION

LUMBAR SPINE ASSEMBLY

SIZE	SHEET	DRAWING NUMBER	REV.
A2	1 OF 1	175–5500	A

REVISION RECORD			
REV.	DESCRIPTION	DATE	BY
A	NHTSA PART 575 NPRM RELEASE	7/30/04	DW

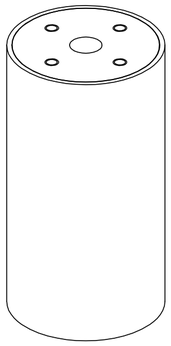

SCALE 0.500

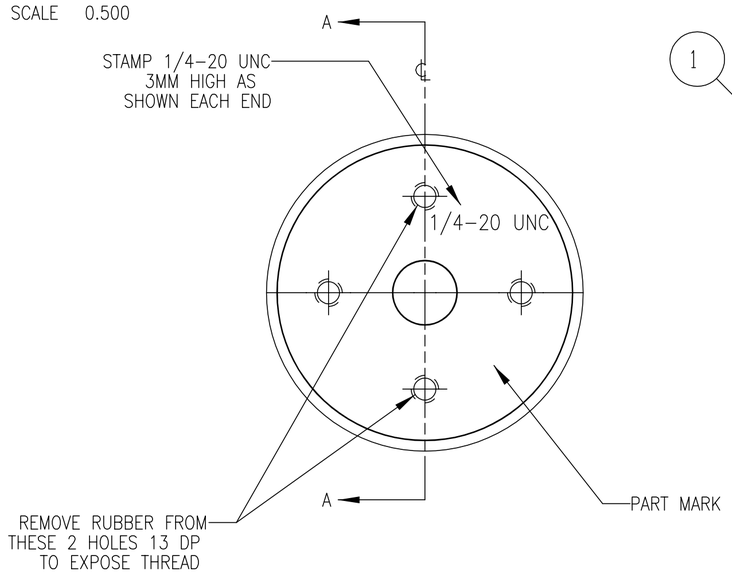

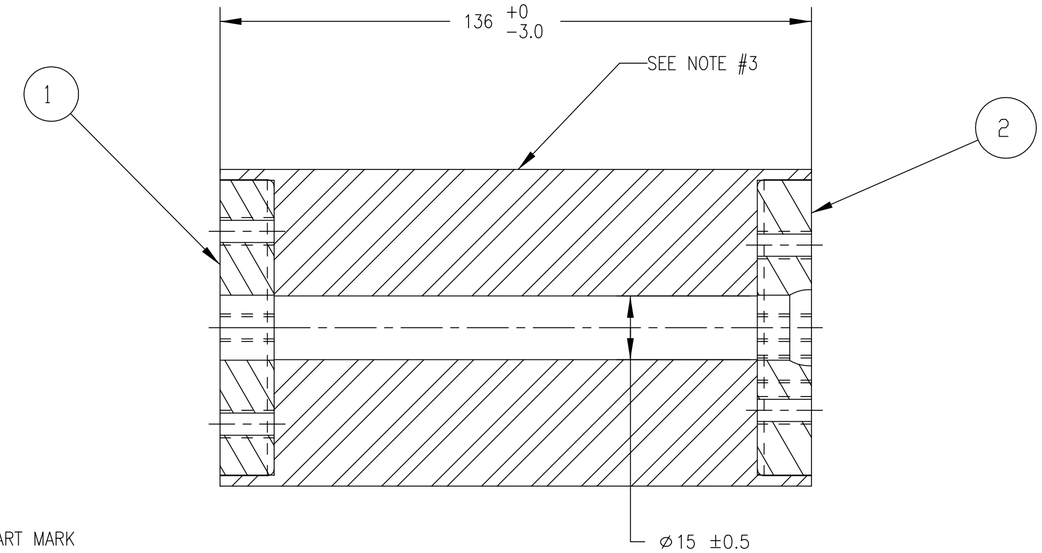

SECTION A-A

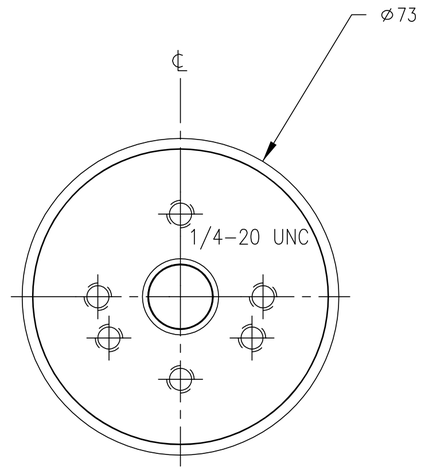

NOTES:

1. ITEMS #1 AND #2 BOND INTO NATURAL RUBBER.
2. CLEAR THREADS OF EXCESS RUBBER.
3. MAT: NATURAL RUBBER, HARDNESS MAY VARY IN ACCORDANCE WITH PERFORMANCE REQUIREMENT RECOMMENDED GUIDE 80±5 SHORE "A"
4. VIBRO ETCH '175-5501' FOLLOWED BY SERIAL NO. WHERE SHOWN.
5. ALL UNTOLERANCED DIMENSIONS ±1 mm.

ITEM NO.	QTY	PART NO.	DESCRIPTION
2	1	175-5503	LUMBAR SPINE PLATE, LOWER
1	1	175-5502	LUMBAR SPINE PLATE, UPPER

PART LIST

UNITS ARE millimeters

TOLERANCES ARE: *

DECIMALS:
X ±0.5
.X ±0.1
.XX ±0.05

ANGLES: ±0.5°

MACHINED: 63

* unless otherwise noted

MATERIAL: SEE NOTES

SCALE: 1.000

APPROVALS	DATE
DRAWN	
CHECKED	
ENGINEER	

NATIONAL HIGHWAY TRAFFIC SAFETY ADMINISTRATION

LUMBAR SPINE, MOLDED

SIZE	SHEET	DRAWING NUMBER	REV.
A2	1 OF 1	175-5501	A

REVISION RECORD			
REV.	DESCRIPTION	DATE	BY
A	NHTSA PART 575 NPRM RELEASE	7/30/04	DW

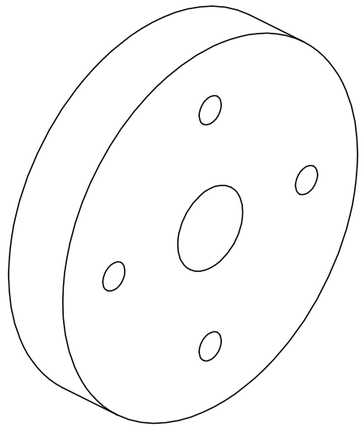

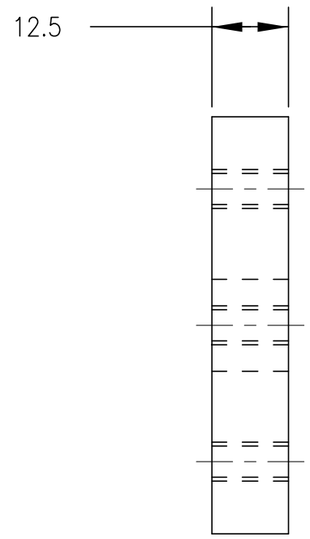

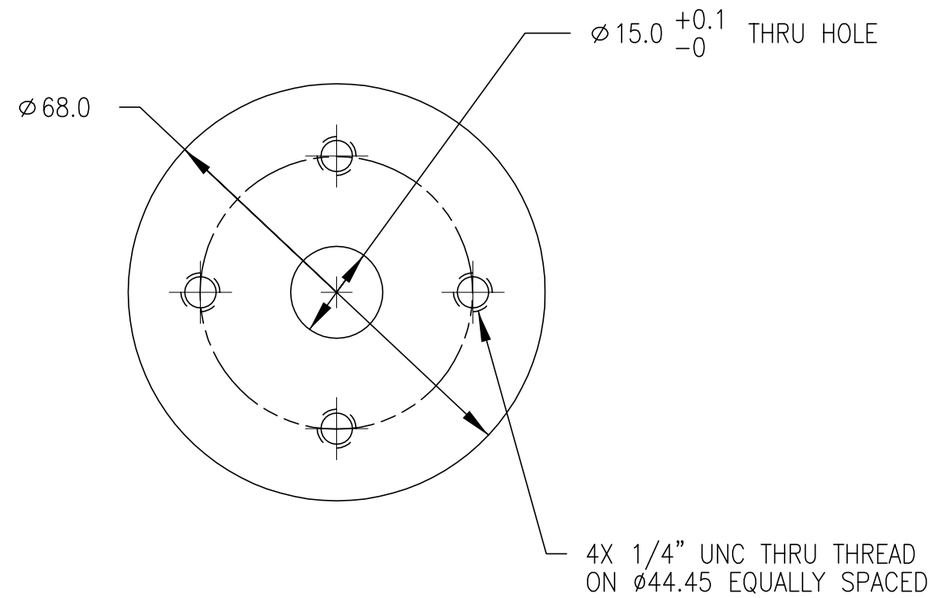

NOTES:
1. SURFACE FINISH TO BE 0.8 OR BETTER ALL OVER UNLESS OTHERWISE STATED.
2. REMOVE ALL BURRS AND BREAK SHARP EDGES
3. THREAD MUST BE CLEAR & FREE RUNNING.
4. FINISH: BEAD BLAST

ITEM NO.	QTY	PART NO.	DESCRIPTION

PART LIST

UNITS ARE millimeters

TOLERANCES ARE: *

DECIMALS:
X ±0.5
.X ±0.1
.XX ±0.05

ANGLES: ±0.5°

MACHINED: 63

* unless otherwise noted

MATERIAL 080 M40 STEEL

SCALE 1.000

APPROVALS	DATE
DRAWN	
CHECKED	
ENGINEER	

NATIONAL HIGHWAY TRAFFIC SAFETY ADMINISTRATION

LUMBAR SPINE PLATE, UPPER

SIZE	SHEET	DRAWING NUMBER	REV.
A3	1 OF 1	175-5502	A

REVISION RECORD			
REV.	DESCRIPTION	DATE	BY
A	NHTSA PART 575 NPRM RELEASE	7/30/04	DW

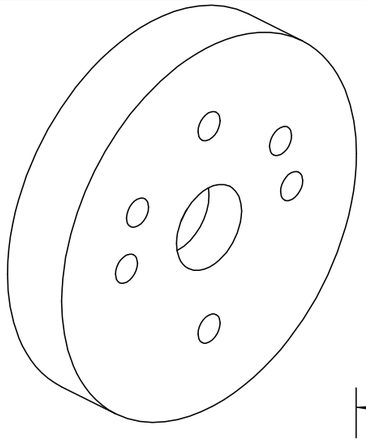

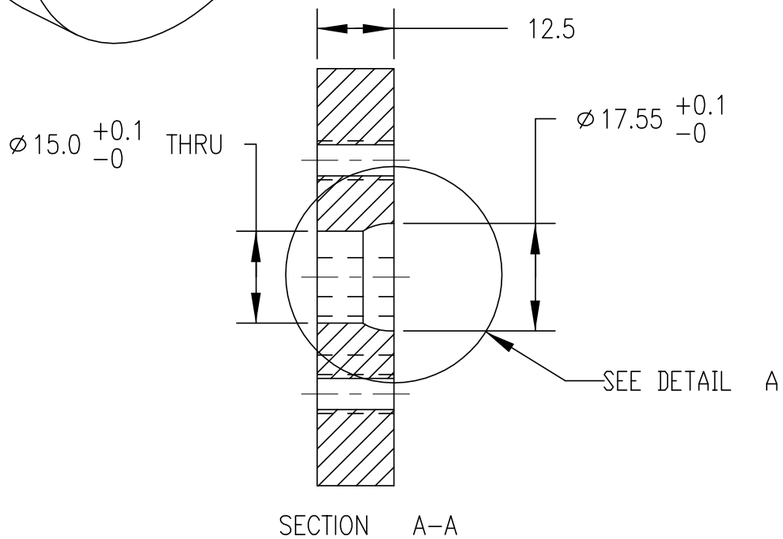

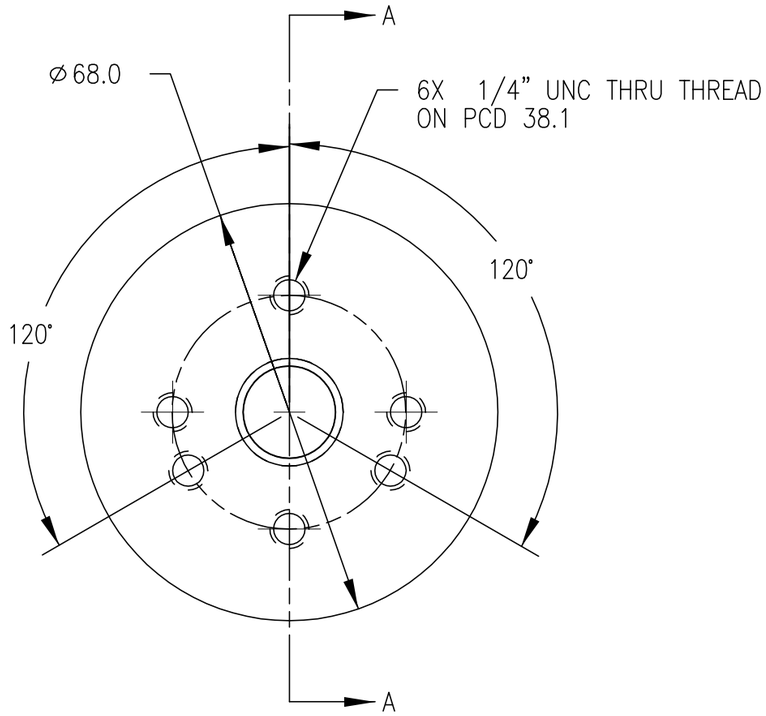

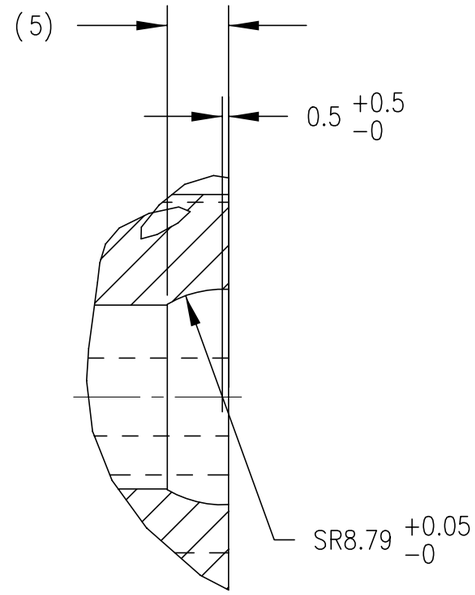

DETAIL A
SCALE 2.00

NOTES:
1. SURFACE FINISH TO BE 0.8 OR BETTER ALL OVER UNLESS OTHERWISE STATED.
2. REMOVE ALL BURRS AND BREAK SHARP EDGES
3. FINISH: BEAD BLAST.

ITEM NO.	QTY	PART NO.	DESCRIPTION

PART LIST

UNITS ARE millimeters

TOLERANCES ARE: *

DECIMALS:
X ±0.5
.X ±0.1
.XX ±0.05

ANGLES: ±0.5°

MACHINED: 63

* unless otherwise noted

MATERIAL 080M40 STEEL

SCALE 1.000

APPROVALS	DATE
DRAWN	
CHECKED	
ENGINEER	

NATIONAL HIGHWAY TRAFFIC SAFETY ADMINISTRATION

LUMBAR SPINE PLATE, LOWER

SIZE	SHEET	DRAWING NUMBER	REV.
A3	1 OF 1	175–5503	A

REVISION RECORD			
REV.	DESCRIPTION	DATE	BY
A	NHTSA PART 575 NPRM RELEASE	7/30/04	DW

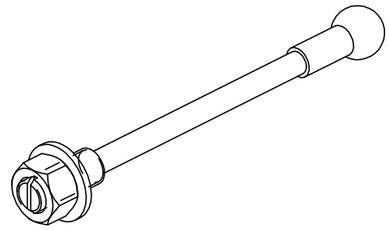

SCALE 0.500

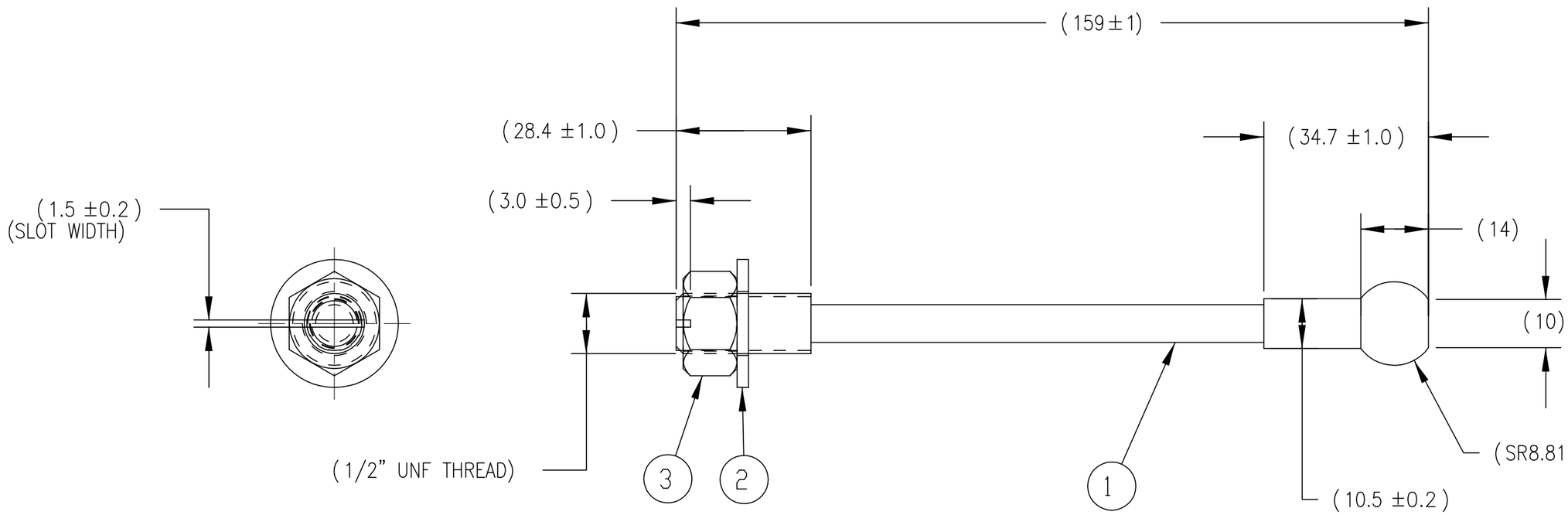

ITEM NO.	QTY	PART NO.	DESCRIPTION
3	1	9000057	NUT, HEX NUT 1/2-20
2	1	9000174	WASHER, 1/2 (.531 ID) X 1.062 X .095
1	1	175-5506	CABLE ASSEMBLY-LUMBAR

PART LIST

UNITS ARE millimeters

TOLERANCES ARE: *

DECIMALS:
X ±0.5
.X ±0.1
.XX ±0.05

ANGLES: ±0.5°

MACHINED: 63

* unless otherwise noted

MATERIAL

SCALE 1.000

APPROVALS	DATE
DRAWN	
CHECKED	
ENGINEER	

NATIONAL HIGHWAY TRAFFIC SAFETY ADMINISTRATION

LUMBAR CABLE ASSEMBLY

SIZE	SHEET	DRAWING NUMBER	REV.
A3	1 OF 1	175-5505	A

REVISION RECORD			
REV.	DESCRIPTION	DATE	BY
A	NHTSA PART 572 NPRM RELEASE	7/30/04	DMW

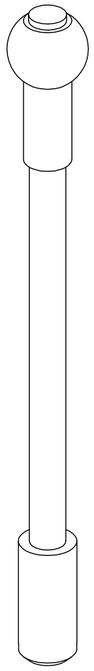

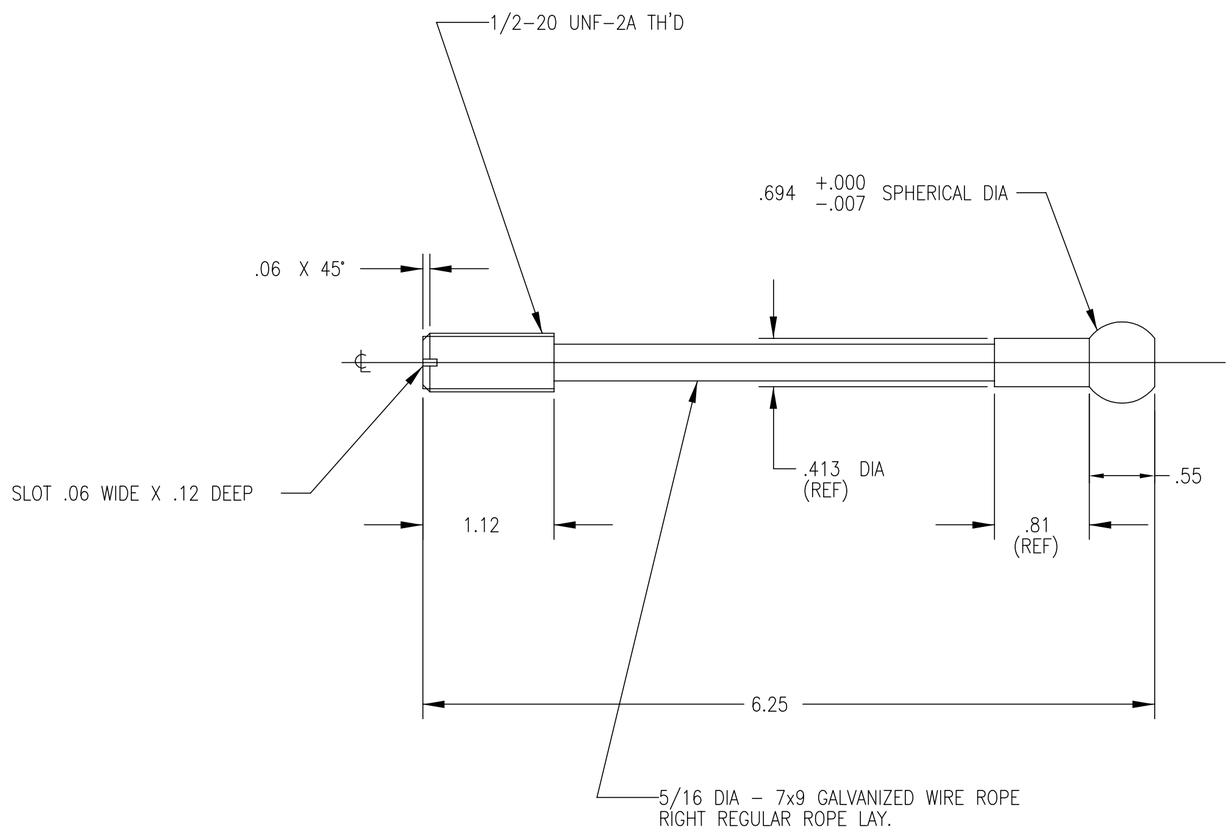

NOTES:

1. UNLESS OTHERWISE SPECIFIED: MUST BE FREE FROM BURRS AND SHARP EDGES.
2. THREADED SLEEVE & SHANK BALL SLEEVE END TO BE SWAGED SECURELY SO THAT NO SLIPPAGE OF BALL OR THREADED SLEEVE ON CABLE SHALL OCCUR UNDER 3,400 LBS. OF TENSION LOAD.

ITEM NO.	QTY	FSCM NO.	PART NO.	DESCRIPTION

PART LIST

UNITS ARE inches

TOLERANCES ARE: *
DECIMALS:
.X ±0.1
.XX ±0.01
.XXX ±0.005
FRACTIONS ±1/64
ANGLES: ±0.5°
MACHINED: 63
* unless otherwise noted

MATERIAL: NOTED
SCALE: 1.000

APPROVALS	DATE
DRAWN	
CHECKED	
ENGINEER	

NATIONAL HIGHWAY TRAFFIC SAFETY ADMINISTRATION

CABLE ASSEMBLY–LUMBAR

SIZE	SHEET	DRAWING NUMBER	REV.
C	1 OF 1	175–5506	A

REVISION RECORD			
REV.	DESCRIPTION	DATE	BY
A	NHTSA PART 575 NPRM RELEASE	7/30/04	DW

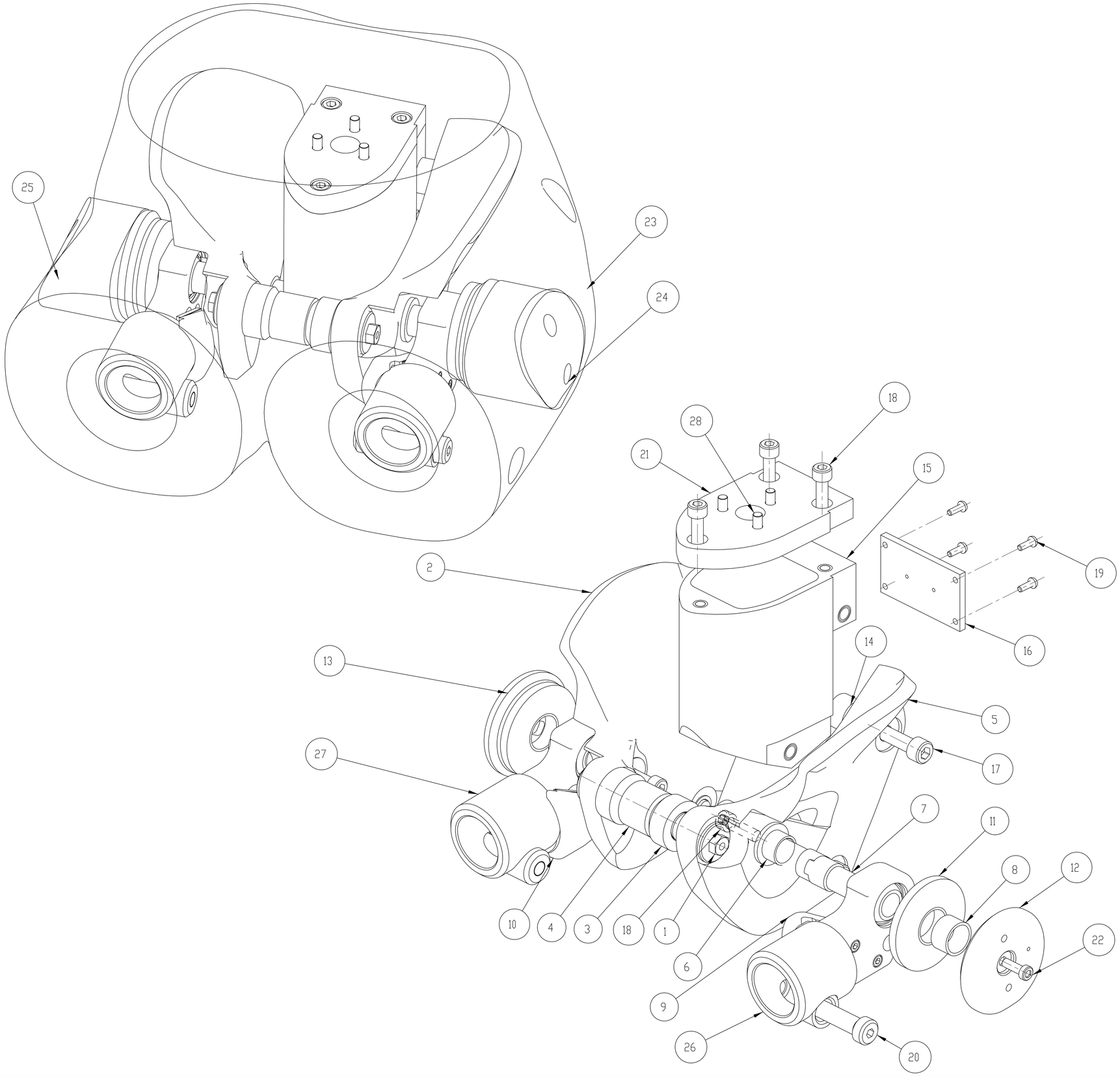

ITEM NO.	QTY	PART NO.	DESCRIPTION
28	3	9000144	SCREW, SHCS 1/4–20 X 5/8
27	1	175–6065	UPPER FEMUR RH INCLUDE BEARING
26	1	175–6060	UPPER FEMUR LH INCLUDE BEARING
25	1	175–6056	H–POINT FOAM BLOCK, RIGHT
24	1	175–6055	H–POINT FOAM BLOCK, LEFT
23	1	175–6050	PELVIS MOLDED, CERTIFIED
22	2	5000296	SCREW, LHCS M6 X 16
21	1	175–6045	LUMBAR MOUNTING PLATE
20	2	5000033	SCREW, SHSS M12 X 40
19	4	5000005	SCREW, BHCS M4 X 0.7 X 12
18	5	5000030	SCREW, SHCS M8 X 1.25 X 25
17	4	5000032	SCREW, SHCS M10 X 1.5 X 40
16	1	175–6041	SACRUM COVER PLATE
15	1	175–6040	SACRUM BLOCK
14	4	175–6030	SACRUM SPACER
13	1	175–6027	BACK PLATE, RIGHT
12	1	175–6026	BACK PLATE, LEFT
11	2	175–6025	BACK PLATE BUFFER
10	1	175–6020	FEMUR BUFFER ASSEMBLY, RIGHT
9	1	175–6015	FEMUR BUFFER ASSEMBLY, LEFT
8	2	175–6013	TUBE STOP
7	2	175–6012	HIP PIVOT PIN
6	2	175–6011	SPACER RING
5	1	175–6010	ILIAC WING ASSEMBLY, LEFT
4	1	175–6006	PUBIC SYMPHYSIS STRUCTURAL REPLACEMENT
3	2	175–6005	TRANSDUCER SPACER
2	1	175–6002	ILIAC WING ASSEMBLY, RIGHT
1	2	175–6001	TRANSDUCER BUSHING

PART LIST

UNITS ARE millimeters

TOLERANCES ARE: *

DECIMALS:
X ±0.5
.X ±0.1
.XX ±0.05

ANGLES: ±0.5°

MACHINED: 63

* unless otherwise noted

MATERIAL

SCALE 0.750

APPROVALS	DATE
DRAWN	
CHECKED	
ENGINEER	

NATIONAL HIGHWAY TRAFFIC SAFETY ADMINISTRATION

PELVIS ASSEMBLY

SIZE	SHEET	DRAWING NUMBER	REV.
A1	1 OF 1	175–6000	A

REVISION RECORD			
REV.	DESCRIPTION	DATE	BY
A	NHTSA PART 575 NPRM RELEASE	7/30/04	DW

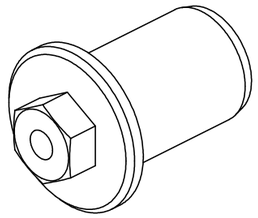

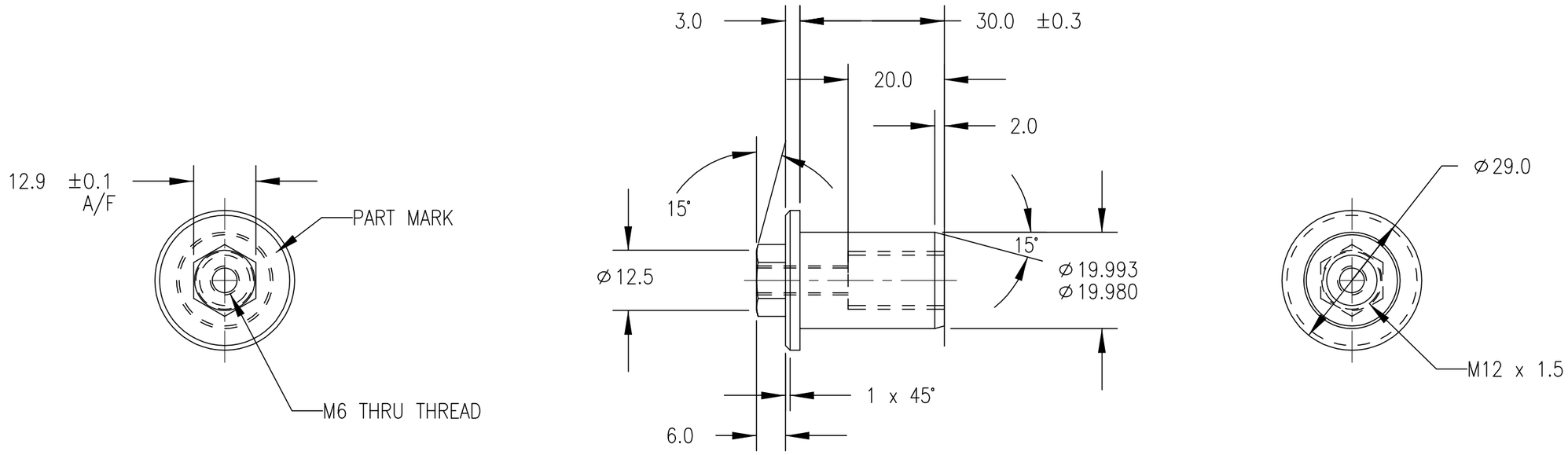

NOTES:

1. REMOVE ALL SHARP EDGES AND BURRS PRIOR TO ANODISING.
2. SURFACE FINISH TO BE 0.8 ✓ OR BETTER ALL OVER.
3. SILVER ANODISE TO BS1615, AA10, HOT WATER SEAL
4. PART MARK WITH INDELIBLE PEN '175-6001' FOLLOWED BY SERIAL No WHERE SHOWN

ITEM NO.	QTY	PART NO.	DESCRIPTION

PART LIST

UNITS ARE millimeters

TOLERANCES ARE: *

DECIMALS:
X ±0.5
.X ±0.1
.XX ±0.05

ANGLES: ±0.5°

MACHINED: 63 ✓

* unless otherwise noted

MATERIAL: 6082 (HE30) ALUMINUM

SCALE: 1.000

APPROVALS	DATE
DRAWN	
CHECKED	
ENGINEER	

NATIONAL HIGHWAY TRAFFIC SAFETY ADMINISTRATION

TRANSDUCER BUSHING

SIZE	SHEET	DRAWING NUMBER	REV.
A3	1 OF 1	175-6001	A

REVISION RECORD			
REV.	DESCRIPTION	DATE	BY
A	NHTSA PART 575 NPRM RELEASE	7/30/04	DW

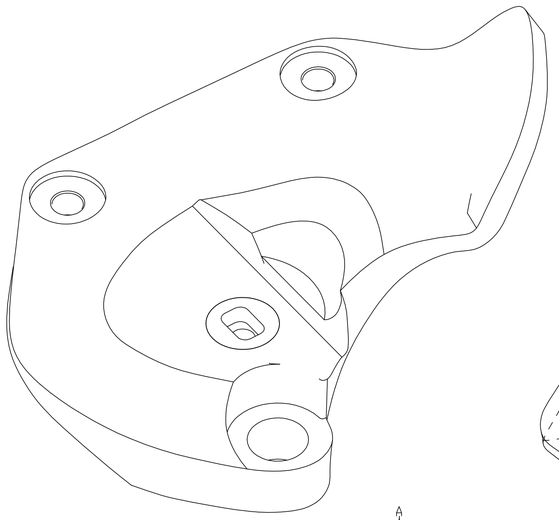

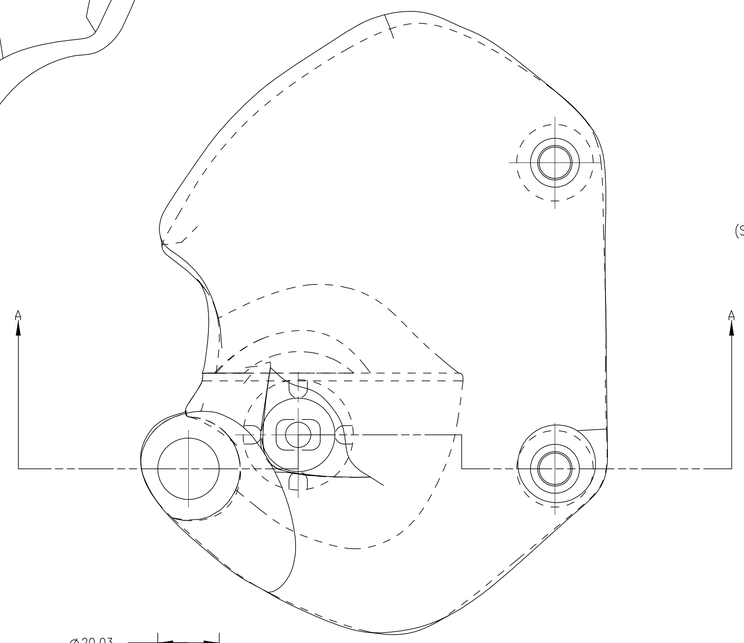

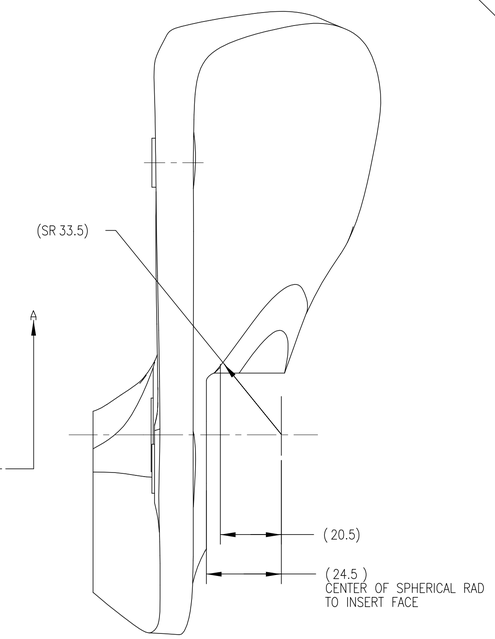

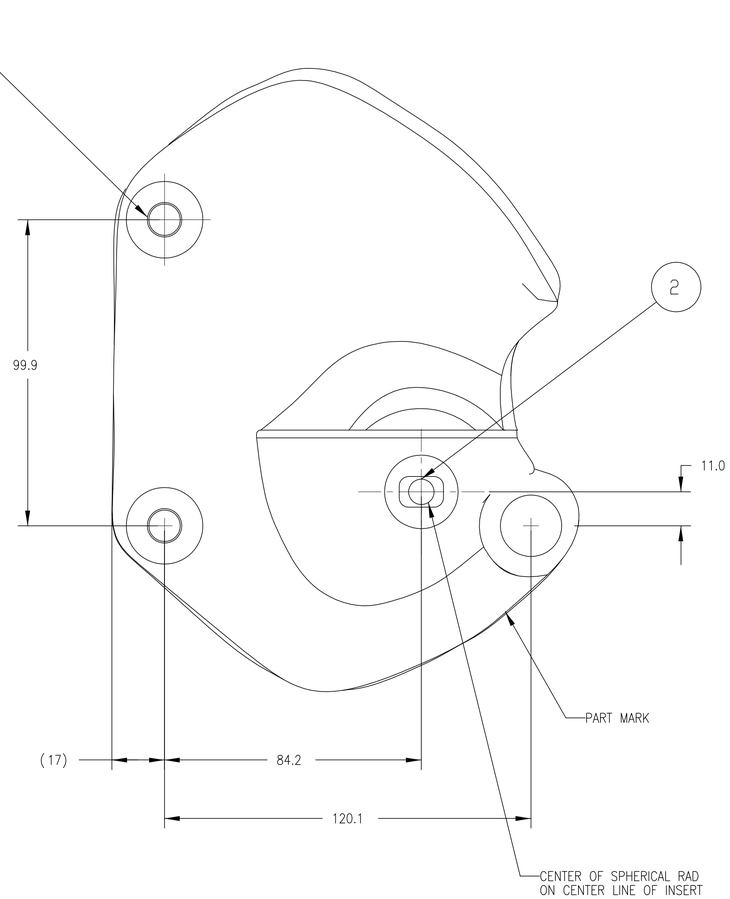

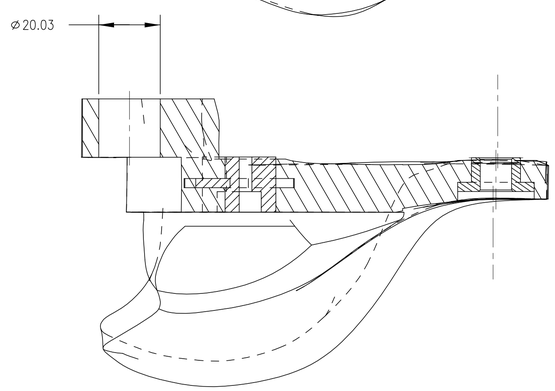

SECTION A-A

NOTES:

1. DEBURR.
2. PART MARK WITH INDELIBLE PEN '175-6002' FOLLOWED BY SERIAL NO. WHERE SHOWN.
3. ALL TOLERANCES OTHER THAN HOLE CENTERS ±1mm.

ITEM NO.	QTY	PART NO.	DESCRIPTION
2	1	175-6004	ILIAC WING INSERT
1	2	175-6003	ILIAC WING INSERT (TOP HAT)

PART LIST

UNITS ARE millimeters

TOLERANCES ARE: *

DECIMALS:
X ±0.5
.X ±0.1
.XX ±0.05

ANGLES: ±0.5°

MACHINED: 63

* unless otherwise noted

MATERIAL: PU RESIN

SCALE: 1.000

APPROVALS	DATE
DRAWN	
CHECKED	
ENGINEER	

NATIONAL HIGHWAY TRAFFIC SAFETY ADMINISTRATION

ILIAC WING ASSEMBLY, RIGHT

SIZE: A1 | SHEET: 1 OF 1 | DRAWING NUMBER: 175-6002 | REV.: A

REVISION RECORD			
REV.	DESCRIPTION	DATE	BY
A	NHTSA PART 575 NPRM RELEASE	7/30/04	DW

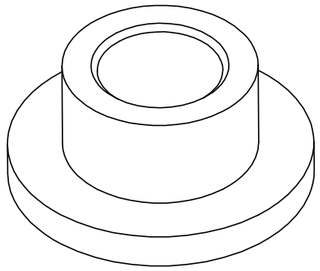

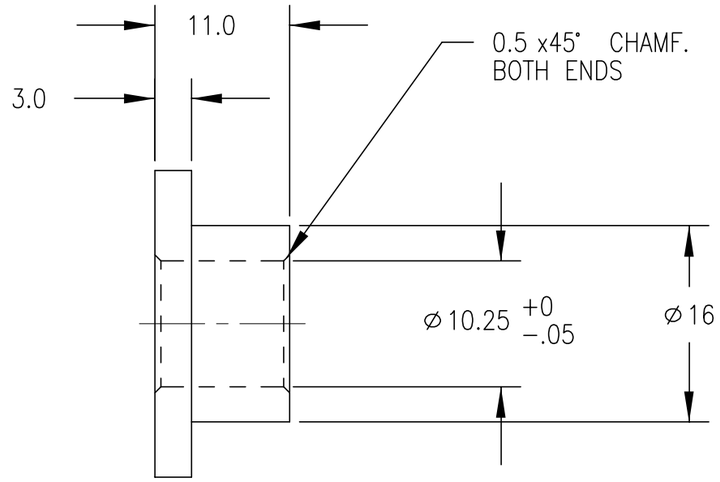

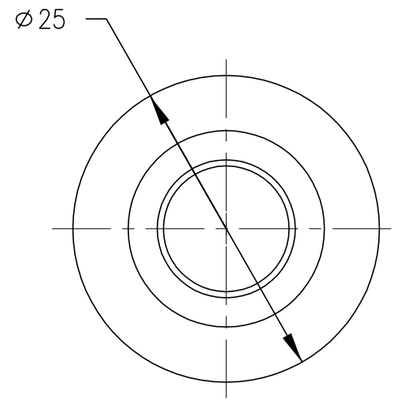

NOTES:

1. SURFACE FINISH TO BE 0.8 OR BETTER ALL OVER UNLESS OTHERWISE STATED.
2. REMOVE ALL BURRS AND BREAK SHARP EDGES.
3. FINISH: CHEMI–BLACK

ITEM NO.	QTY	PART NO.	DESCRIPTION

PART LIST

UNITS ARE millimeters

TOLERANCES ARE: *

DECIMALS:
X ±0.5
.X ±0.1
.XX ±0.05

ANGLES: ±0.5°

MACHINED: 63

* unless otherwise noted

MATERIAL: 080M40 STEEL (EN8)

SCALE: 2.000

APPROVALS	DATE
DRAWN	
CHECKED	
ENGINEER	

NATIONAL HIGHWAY TRAFFIC SAFETY ADMINISTRATION

ILIAC WING INSERT (TOP HAT)

SIZE	SHEET	DRAWING NUMBER	REV.
A3	1 OF 1	175–6003	A

REVISION RECORD			
REV.	DESCRIPTION	DATE	BY
A	NHTSA PART 575 NPRM RELEASE	7/30/04	DW

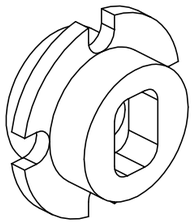

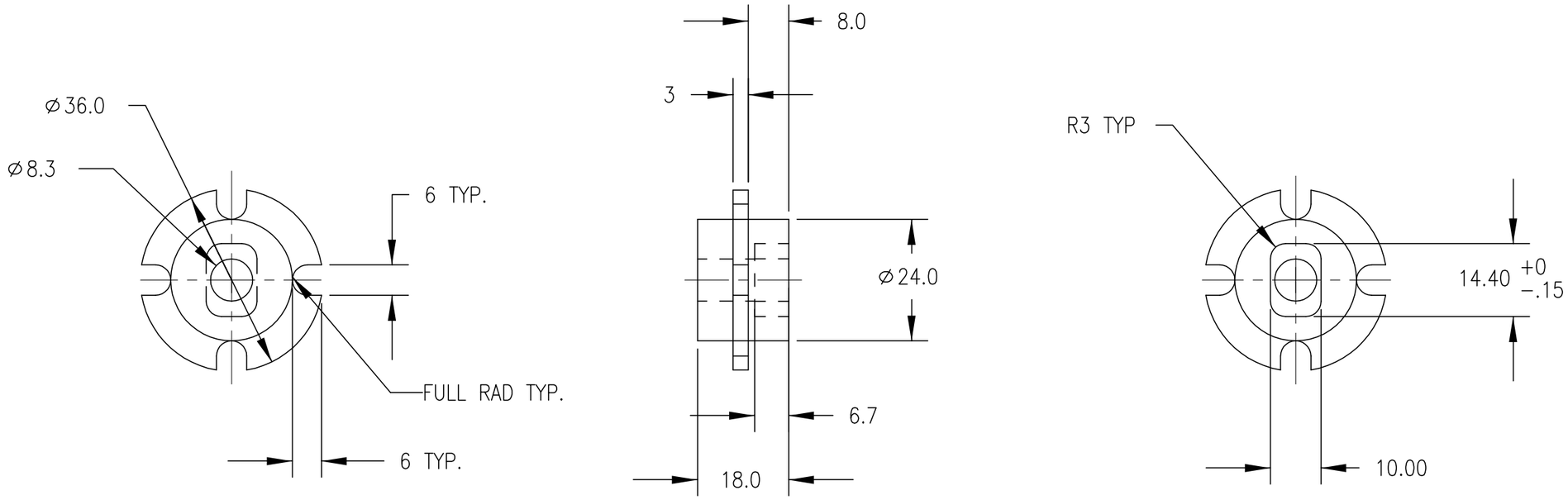

NOTES:

1. SURFACE FINISH TO BE 1.2 OR BETTER ALL OVER UNLESS OTHERWISE STATED.
2. REMOVE ALL BURRS AND BREAK SHARP EDGES.
3. FINISH: CHEMI–BLACK

ITEM NO.	QTY	PART NO.	DESCRIPTION

PART LIST

UNITS ARE millimeters

TOLERANCES ARE: *

DECIMALS:
X ±0.5
.X ±0.1
.XX ±0.05

ANGLES: ±0.5°

MACHINED: 63

* unless otherwise noted

MATERIAL: 080M40 STEEL (EN8)

SCALE: 1.000

APPROVALS	DATE
DRAWN	
CHECKED	
ENGINEER	

NATIONAL HIGHWAY TRAFFIC SAFETY ADMINISTRATION

ILIAC WING INSERT

SIZE	SHEET	DRAWING NUMBER	REV.
A3	1 OF 1	175–6004	A

REVISION RECORD			
REV.	DESCRIPTION	DATE	BY
A	NHTSA PART 575 NPRM RELEASE	7/30/04	DW

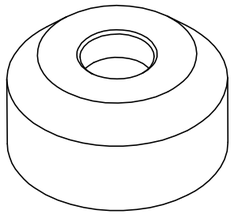

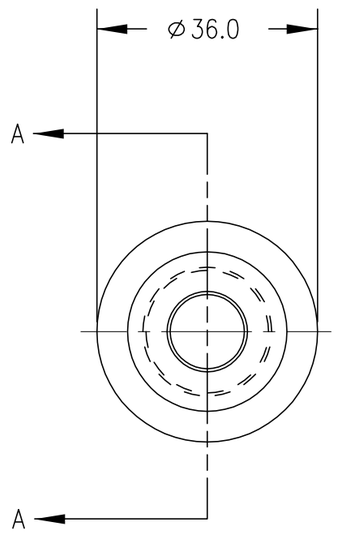

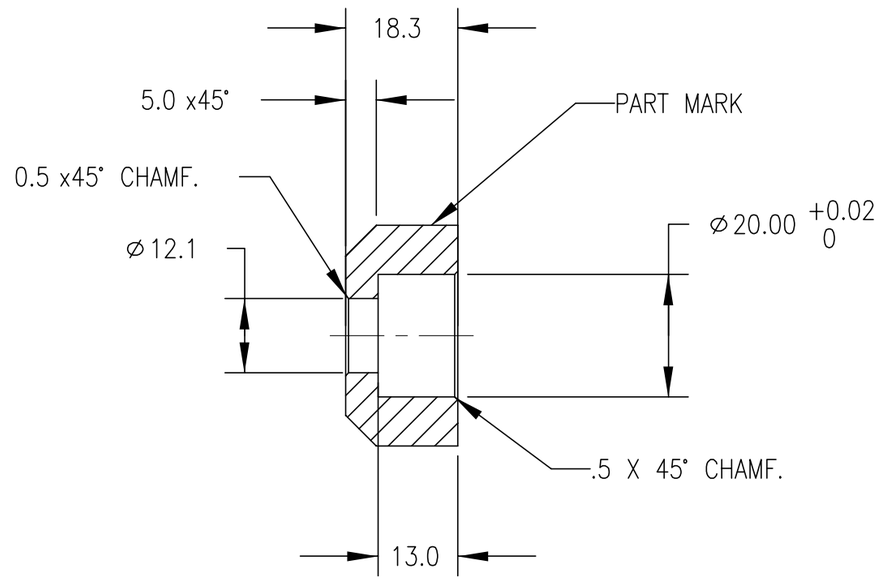

SECTION A–A

NOTES:

1. REMOVE ALL SHARP EDGES AND BURRS PRIOR TO ANODIZING.
2. SURFACE FINISH TO BE 0.8 OR BETTER ALL OVER.
3. SILVER ANODISE TO BS1615, AA10, HOT WATER SEAL
4. PART MARK WITH INDELIBLE PEN '175–6005' FOLLOWED BY SERIAL No WHERE SHOWN

ITEM NO.	QTY	PART NO.	DESCRIPTION

PART LIST

UNITS ARE millimeters

TOLERANCES ARE: *

DECIMALS:
X ±0.5
.X ±0.1
.XX ±0.05

ANGLES: ±0.5°

MACHINED: 63

* unless otherwise noted

MATERIAL: 6082 (HE30) ALUMINUM

SCALE: 1.000

APPROVALS	DATE
DRAWN	
CHECKED	
ENGINEER	

NATIONAL HIGHWAY TRAFFIC SAFETY ADMINISTRATION

TRANSDUCER SPACER

SIZE	SHEET	DRAWING NUMBER	REV.
A3	1 OF 1	175–6005	A

REVISION RECORD			
REV.	DESCRIPTION	DATE	BY
A	NHTSA PART 575 NPRM RELEASE	7/30/04	DW

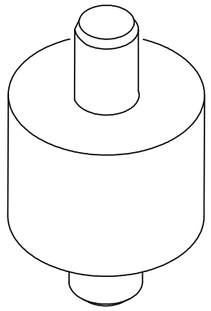

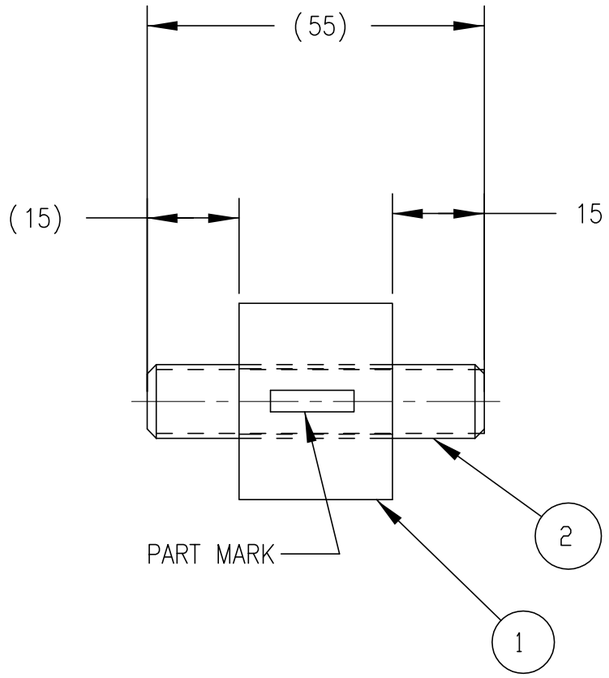

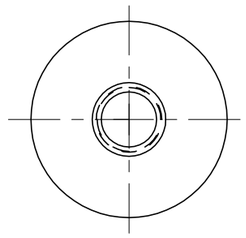

NOTES:

1. BOND ITEM #1 AND ITEM #2 USING LOCTITE 601 STUD LOCK.
2. PART MARK WITH INDELIBLE PEN '175-6006' FOLLOWED BY SERIAL NO. WHERE SHOWN.

ITEM NO.	QTY	PART NO.	DESCRIPTION
2	1	175-6008	STUD, STRUCTURAL REPLACEMENT
1	1	175-6007	SPACER, STRUCTURAL REPLACEMENT

PART LIST

UNITS ARE millimeters

TOLERANCES ARE: *

DECIMALS:
X ±0.5
.X ±0.1
.XX ±0.05

ANGLES: ±0.5°

MACHINED: 63

* unless otherwise noted

MATERIAL		
SCALE 1.000		
APPROVALS	DATE	
DRAWN		
CHECKED		
ENGINEER		

NATIONAL HIGHWAY TRAFFIC SAFETY ADMINISTRATION

PUBIC SYMPHYSIS

STRUCTURAL REPLACEMENT

SIZE	SHEET	DRAWING NUMBER	REV.
A3	1 OF 1	175-6006	A

REVISION RECORD			
REV.	DESCRIPTION	DATE	BY
A	NHTSA PART 575 NPRM RELEASE	7/30/04	DW

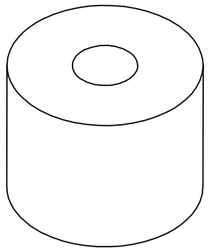

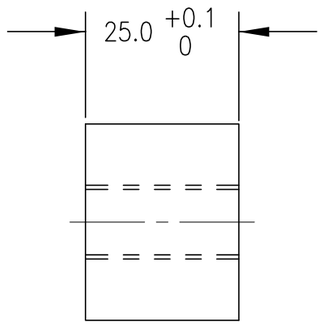

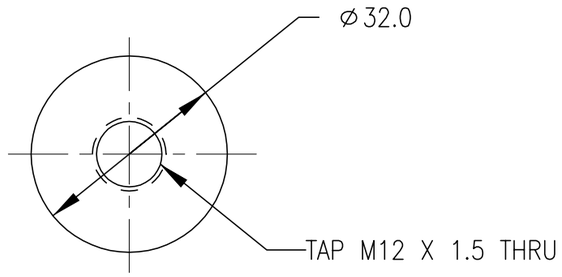

NOTES:

1. MATERIAL: 6082 (HE30TF) ALUM. ALLOY.
2. ALL THREADS TO CONFORM TO BS3643.
3. SURFACE FINISH TO BE 0.8 OR BETTER.
4. REMOVE ALL SHARP EDGES AND BURRS.
5. SILVER ANODISED TO BS1615, AA10, HOT WATER SEAL PRIOR TO ASSEMBLY.

ITEM NO.	QTY	PART NO.	DESCRIPTION

PART LIST

UNITS ARE millimeters

TOLERANCES ARE: *

DECIMALS:
X ±0.5
.X ±0.1
.XX ±0.05

ANGLES: ±0.5°

MACHINED: 63

* unless otherwise noted

		APPROVALS	DATE
MATERIAL	SEE NOTE		
SCALE	1.000		
DRAWN			
CHECKED			
ENGINEER			

NATIONAL HIGHWAY TRAFFIC SAFETY ADMINISTRATION

SPACER, STRUCTURAL REPLACEMENT

SIZE	SHEET	DRAWING NUMBER	REV.
A3	1 OF 1	175-6007	A

REVISION RECORD			
REV.	DESCRIPTION	DATE	BY
A	NHTSA PART 575 NPRM RELEASE	7/30/04	DW

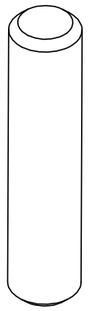

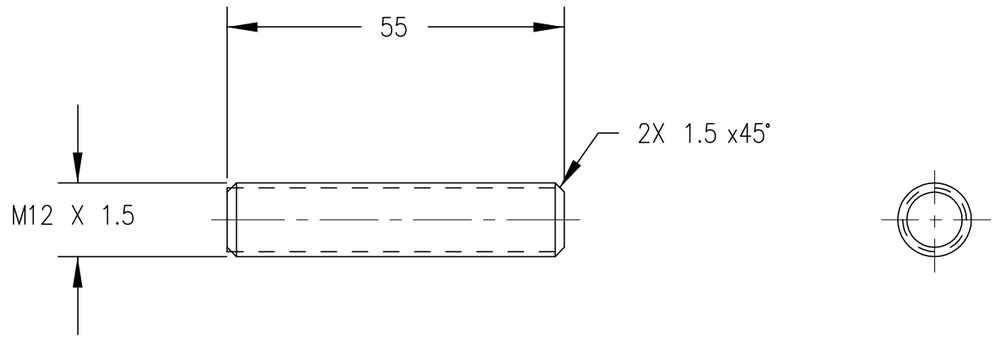

NOTES:

1. MATERIAL: M12 X 1.5 X 55 LG STAINLESS STEEL STUD.
2. ALL THREADS TO CONFORM TO BS3643.

ITEM NO.	QTY	PART NO.	DESCRIPTION

PART LIST

UNITS ARE millimeters

TOLERANCES ARE: *

DECIMALS:
X ±0.5
.X ±0.1
.XX ±0.05

ANGLES: ±0.5°

MACHINED: 63

* unless otherwise noted

MATERIAL	SEE NOTES
SCALE	1.000
APPROVALS	DATE
DRAWN	
CHECKED	
ENGINEER	

NATIONAL HIGHWAY TRAFFIC SAFETY ADMINISTRATION

STUD, STRUCTURAL REPLACEMENT

SIZE	SHEET	DRAWING NUMBER	REV.
A3	1 OF 1	175-6008	A

REVISION RECORD			
REV.	DESCRIPTION	DATE	BY
A	NHTSA PART 575 NPRM RELEASE	7/30/04	DW

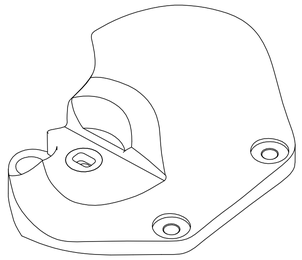

SCALE 0.500

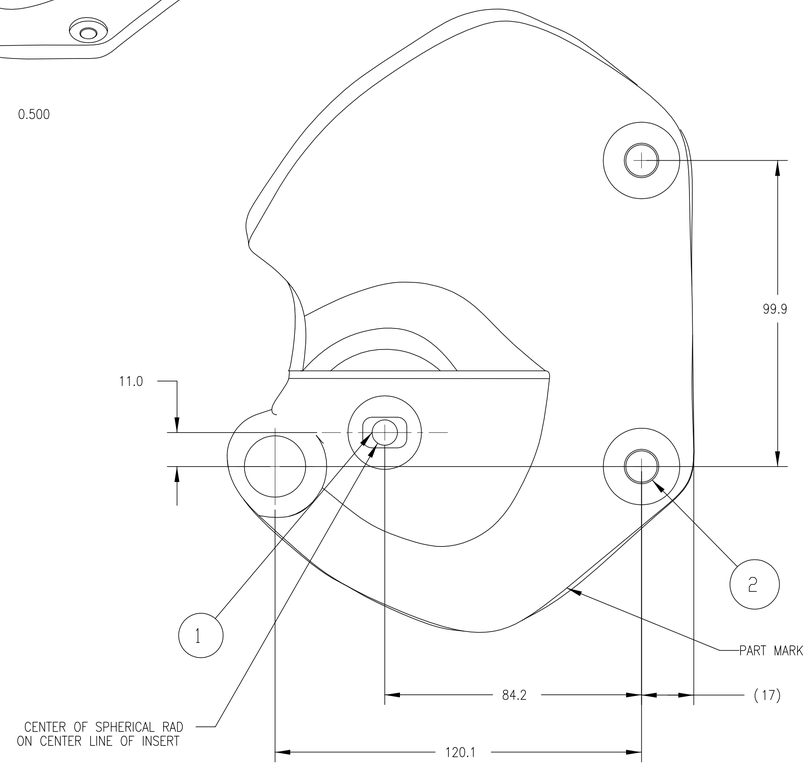

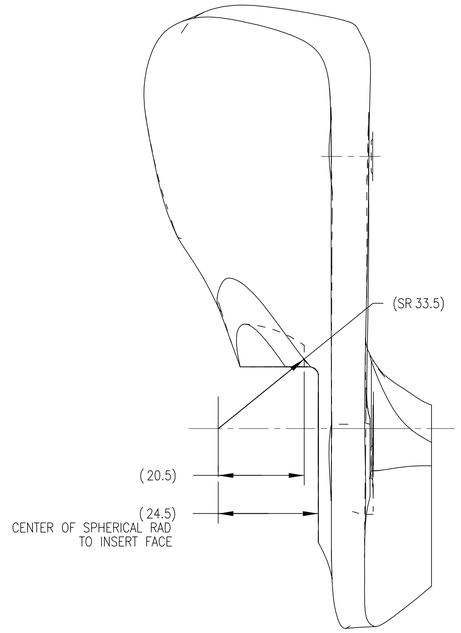

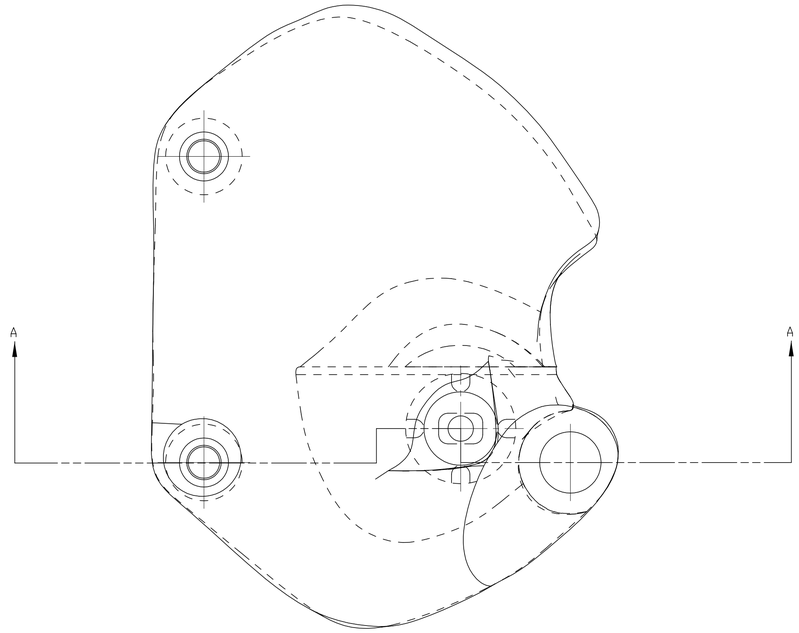

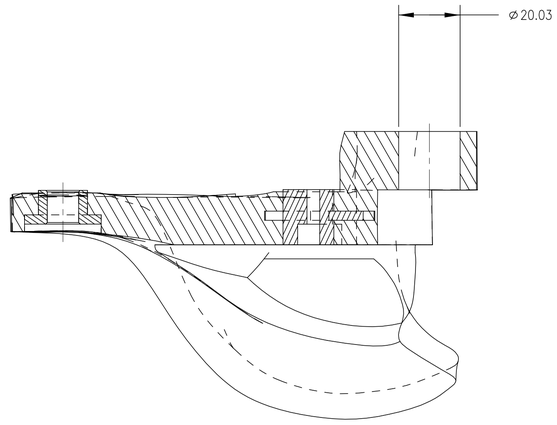

SECTION A-A

NOTES:

1. DEBURR.
2. PART MARK WITH INDELIBLE PEN '175-6010' FOLLOWED BY SERIAL NO. WHERE SHOWN.
3. ALL TOLERANCES OTHER THAN HOLE CENTERS ±1mm.

ITEM NO.	QTY	PART NO.	DESCRIPTION
2	2	175-6003	ILIAC WING INSERT (TOP HAT)
1	1	175-6004	ILIAC WING INSERT

PART LIST

UNITS ARE millimeters

TOLERANCES ARE: *
DECIMALS:
.X ±0.5
.X ±0.1
.XX ±0.05
ANGLES: ±0.5°
MACHINED: 63
* unless otherwise noted

MATERIAL
SCALE 1.000
APPROVALS | DATE
DRAWN
CHECKED
ENGINEER

NATIONAL HIGHWAY TRAFFIC SAFETY ADMINISTRATION

ILIAC WING ASSEMBLY, LEFT

SIZE A1 | SHEET 1 OF 1 | DRAWING NUMBER 175-6010 | REV. A

REVISION RECORD			
REV.	DESCRIPTION	DATE	BY
A	NHTSA PART 575 NPRM RELEASE	7/30/04	DW

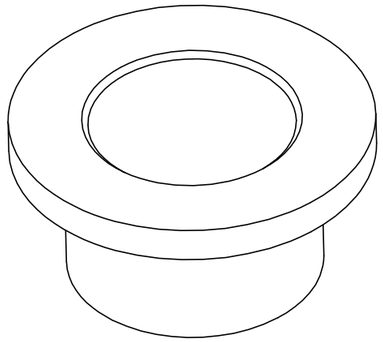

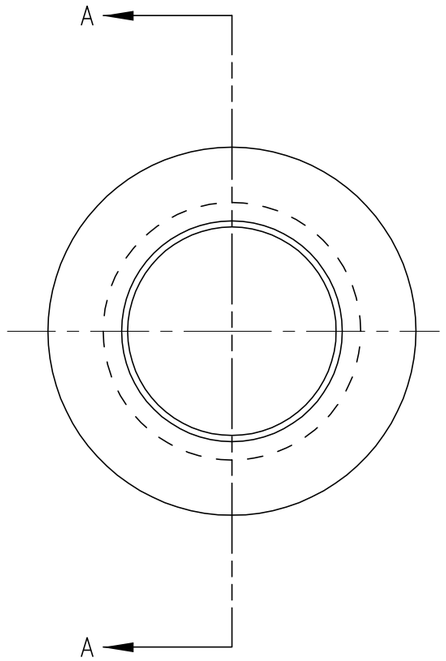

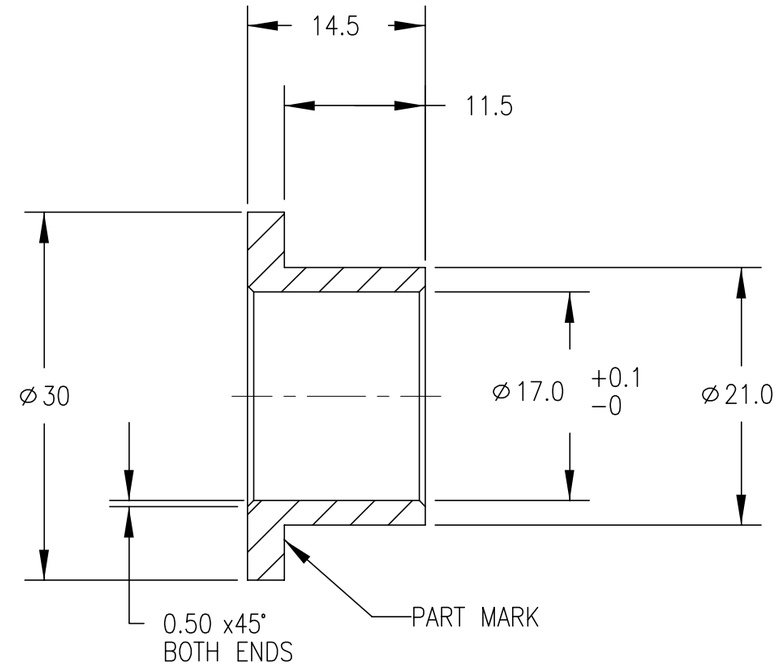

SECTION A–A

NOTES

1. SURFACE FINISH TO BE 0.8
2. REMOVE ALL SHARP EDGES AND BURRS
3. VIBRO ETCH '175–6011' FOLLOWED BY SERIAL No WHERE SHOWN
4. FINISH: CHEMI–BLACK

ITEM NO.	QTY	PART NO.	DESCRIPTION

PART LIST

UNITS ARE millimeters

TOLERANCES ARE: *

DECIMALS:
X ±0.5
.X ±0.1
.XX ±0.05

ANGLES: ±0.5°

MACHINED: 63

* unless otherwise noted

MATERIAL: 080M40 STEEL (EN8)

SCALE: 2.000

APPROVALS	DATE
DRAWN	
CHECKED	
ENGINEER	

NATIONAL HIGHWAY TRAFFIC SAFETY ADMINISTRATION

SPACER RING

SIZE	SHEET	DRAWING NUMBER	REV.
A3	1 OF 1	175–6011	A

REVISION RECORD			
REV.	DESCRIPTION	DATE	BY
A	NHTSA PART 575 NPRM RELEASE	7/30/04	DW

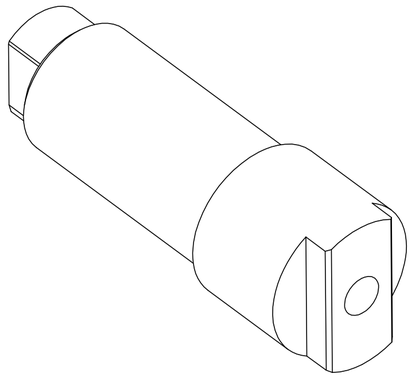

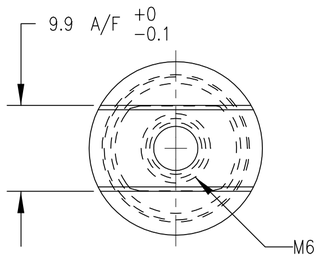

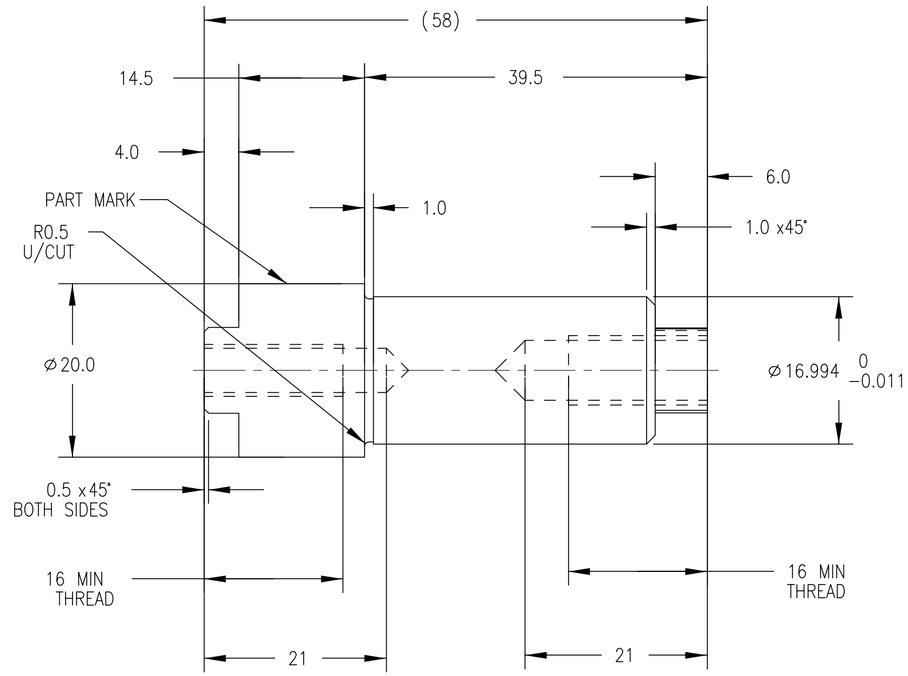

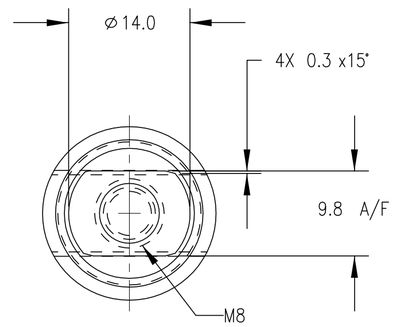

NOTES:

1. SURFACE FINISH TO BE 0.8
2. REMOVE ALL SHARP EDGES AND BURRS
3. ALL THREADS TO CONFORM TO BS3643 AND BE CLEAR AND FREE RUNNING
4. LIGHTLY VIBRO ETCH '175-6012' FOLLOWED BY SERIAL No WHERE SHOWN
5. FINISH: CHEMI-BLACK

ITEM NO.	QTY	PART NO.	DESCRIPTION

PART LIST

UNITS ARE millimeters

TOLERANCES ARE: *

DECIMALS:
X ±0.5
.X ±0.1
.XX ±0.05

ANGLES: ±0.5°

MACHINED: 63

* unless otherwise noted

MATERIAL: 080M40 STEEL (EN8)

SCALE: 2.000

APPROVALS	DATE
DRAWN	
CHECKED	
ENGINEER	

NATIONAL HIGHWAY TRAFFIC SAFETY ADMINISTRATION

HIP PIVOT PIN

SIZE	SHEET	DRAWING NUMBER	REV.
A2	1 OF 1	175-6012	A

REVISION RECORD			
REV.	DESCRIPTION	DATE	BY
A	NHTSA PART 575 NPRM RELEASE	7/30/04	DW

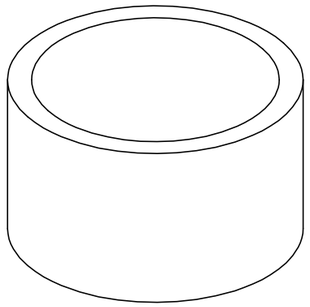

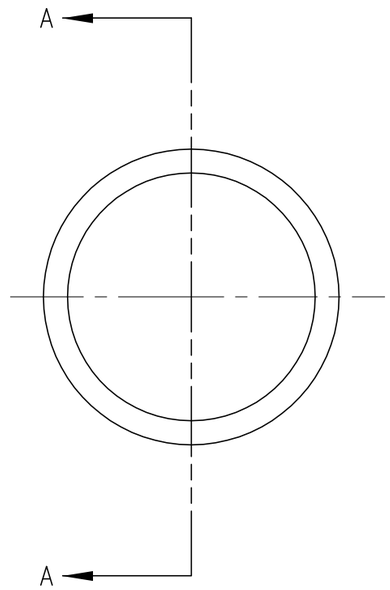

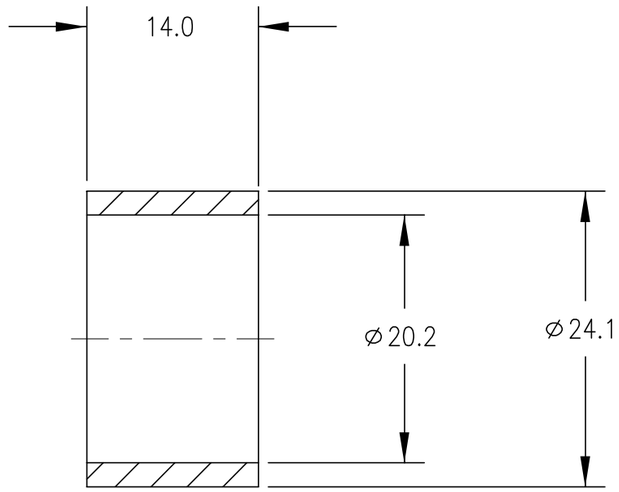

SECTION A–A

NOTES
1. SURFACE FINISH TO BE 0.8
2. REMOVE ALL SHARP EDGES AND BURRS

ITEM NO.	QTY	PART NO.	DESCRIPTION

PART LIST

UNITS ARE millimeters

TOLERANCES ARE: *

DECIMALS:
X ±0.5
.X ±0.1
.XX ±0.05

ANGLES: ±0.5°

MACHINED: 63

* unless otherwise noted

		APPROVALS	DATE
MATERIAL	NYLON 66		
SCALE	2.000		
DRAWN			
CHECKED			
ENGINEER			

NATIONAL HIGHWAY TRAFFIC SAFETY ADMINISTRATION

TUBE STOP

SIZE	SHEET	DRAWING NUMBER	REV.
A3	1 OF 1	175–6013	A

REVISION RECORD			
REV.	DESCRIPTION	DATE	BY
A	NHTSA PART 575 NPRM RELEASE	7/30/04	DW

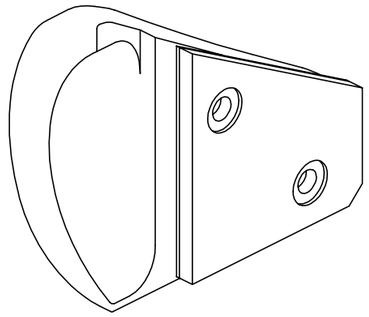

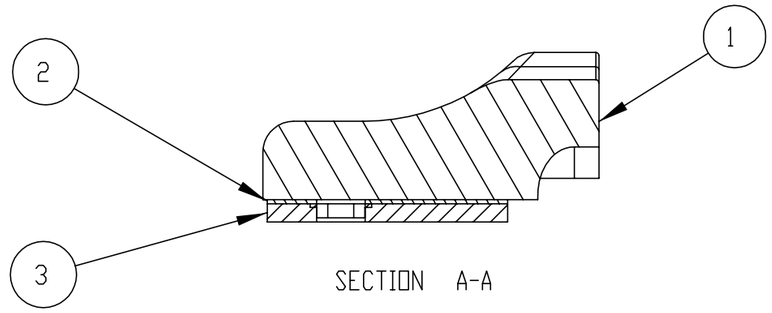

SECTION A-A

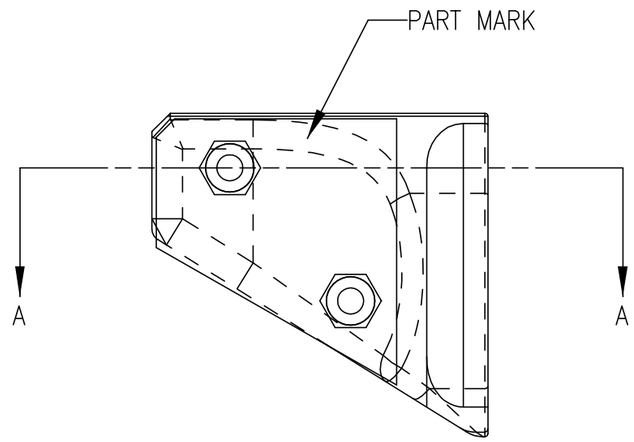

NOTES:

1. SURFACES TO BE BONDED MUST BE DEGREASED WITH 3M VHB SURFACE CLEANER.

2. PART MARK WITH INDELIBLE PEN '175-6015' FOLLOWED BY SERIAL NO. WHERE SHOWN.

ITEM NO.	QTY	PART NO.	DESCRIPTION
3	1	175-6017	FEMUR BUFFER PLATE ASSEMBLY, LEFT
2	1	9002373	TAPE, ACRYLIC, DOUBLE SIDED
1	1	175-6016	BUFFER, UPPER FEMUR, LEFT

PART LIST

UNITS ARE millimeters

TOLERANCES ARE: *

DECIMALS:
X ±0.5
.X ±0.1
.XX ±0.05

ANGLES: ±0.5°

MACHINED: 63

* unless otherwise noted

MATERIAL

SCALE 1.000

APPROVALS	DATE
DRAWN	
CHECKED	
ENGINEER	

NATIONAL HIGHWAY TRAFFIC SAFETY ADMINISTRATION

FEMUR BUFFER ASSEMBLY, LEFT

SIZE	SHEET	DRAWING NUMBER	REV.
A3	1 OF 1	175-6015	A

REVISION RECORD			
REV.	DESCRIPTION	DATE	BY
A	NHTSA PART 575 NPRM RELEASE	7/30/04	DW

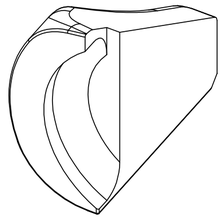

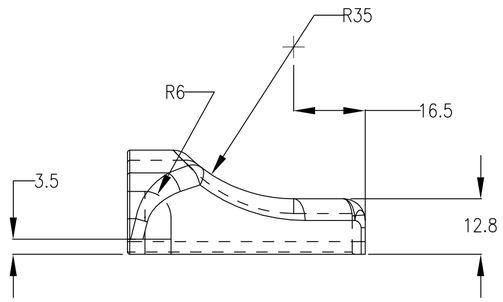

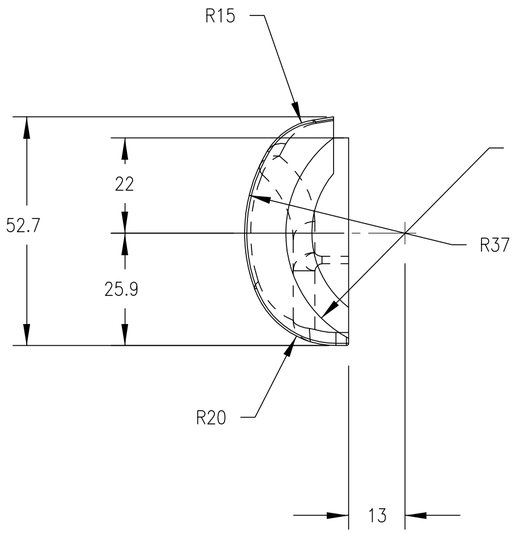

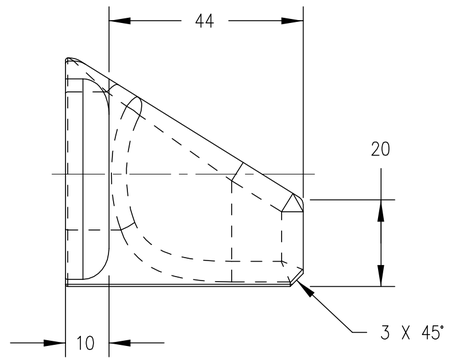

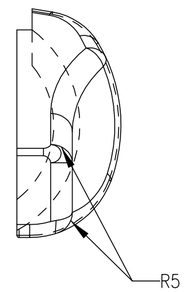

NOTES:

1. HARDNESS: 73±3 SHORE 00
2. THIS IS A MOLDED PART. DIMENSIONS SHOWN ARE REFERENCE ONLY.
3. TOLERANCE OF ±2 MM APPLIED TO ALL DIMENSIONS

ITEM NO.	QTY	PART NO.	DESCRIPTION

PART LIST

UNITS ARE millimeters

TOLERANCES ARE: *

DECIMALS:
X ±0.5
.X ±0.1
.XX ±0.05

ANGLES: ±0.5°

MACHINED: 63

* unless otherwise noted

MATERIAL: POLYURETHANE ELASTOMER

SCALE: 1.000

APPROVALS	DATE
DRAWN	
CHECKED	
ENGINEER	

NATIONAL HIGHWAY TRAFFIC SAFETY ADMINISTRATION

BUFFER, UPPER FEMUR, LEFT

SIZE	SHEET	DRAWING NUMBER	REV.
A2	1 OF 1	175-6016	A

REVISION RECORD			
REV.	DESCRIPTION	DATE	BY
A	NHTSA PART 575 NPRM RELEASE	7/30/04	DW

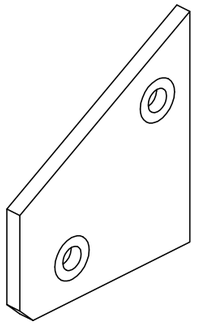

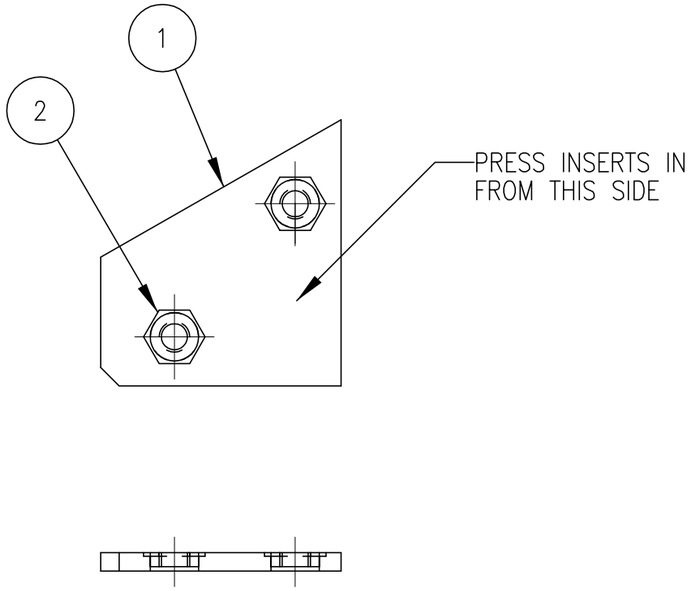

ITEM NO.	QTY	PART NO.	DESCRIPTION
2	2	5000113	PEM FLUSH NUT, M5 X 0.8
1	1	175-6018	PLATE, FEMUR BUFFER

PART LIST

UNITS ARE millimeters

TOLERANCES ARE: *

DECIMALS:
X ±0.5
.X ±0.1
.XX ±0.05

ANGLES: ±0.5°

MACHINED: 63

* unless otherwise noted

MATERIAL		
SCALE 1.000		
APPROVALS	DATE	
DRAWN		
CHECKED		
ENGINEER		

NATIONAL HIGHWAY TRAFFIC SAFETY ADMINISTRATION

FEMUR BUFFER PLATE ASSEMBLY, LEFT

SIZE	SHEET	DRAWING NUMBER	REV.
A3	1 OF 1	175-6017	A

REVISION RECORD			
REV.	DESCRIPTION	DATE	BY
A	NHTSA PART 575 NPRM RELEASE	7/30/04	DW

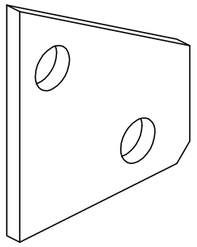

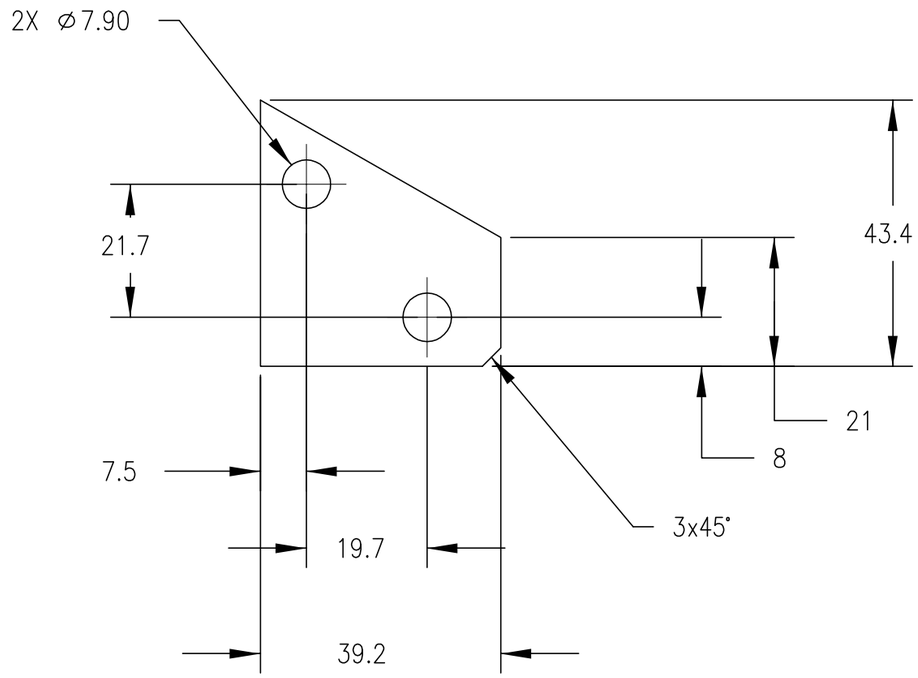

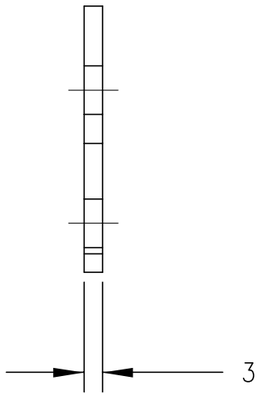

NOTES:

1. MAKE FROM STOCK SHEET.
2. SURFACE FINISH TO 0.8
3. REMOVE ALL BURRS AND BREAK SHARP EDGES.

ITEM NO.	QTY	PART NO.	DESCRIPTION

PART LIST

UNITS ARE millimeters

TOLERANCES ARE: *

DECIMALS:
X ±0.5
.X ±0.1
.XX ±0.05

ANGLES: ±0.5°

MACHINED: 63

* unless otherwise noted

MATERIAL: 6082 (HE30) ALUMINUM

SCALE: 1.000

APPROVALS	DATE
DRAWN	
CHECKED	
ENGINEER	

NATIONAL HIGHWAY TRAFFIC SAFETY ADMINISTRATION

PLATE, FEMUR BUFFER

SIZE	SHEET	DRAWING NUMBER	REV.
A3	1 OF 1	175-6018	A

REVISION RECORD			
REV.	DESCRIPTION	DATE	BY
A	NHTSA PART 575 NPRM RELEASE	7/30/04	DW

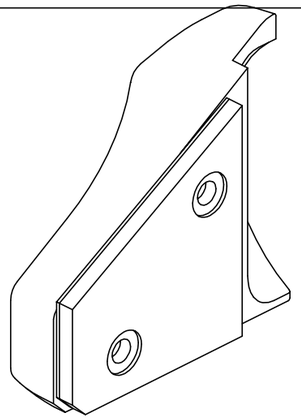

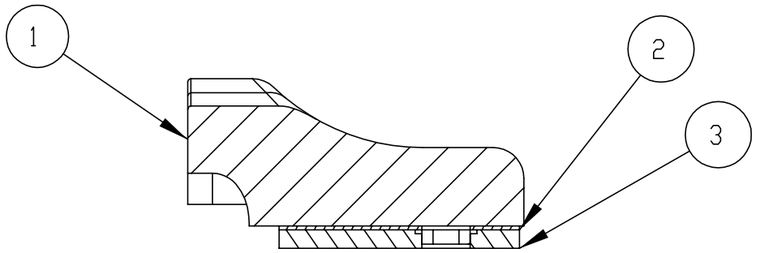

SECTION A-A

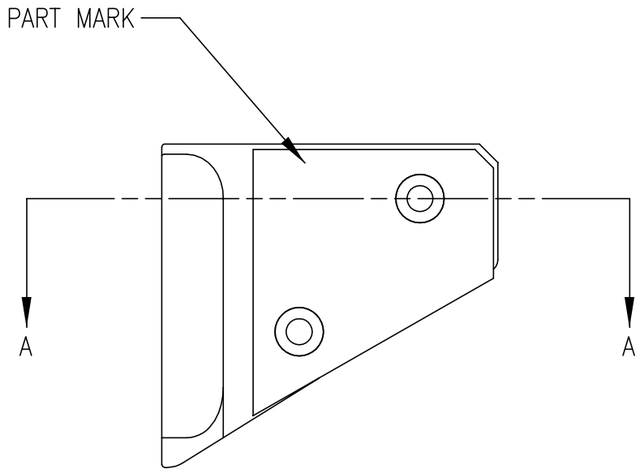

NOTES:

1. SURFACES TO BE BONDED MUST BE DEGREASED WITH 3M VHB SURFACE CLEANER.

2. PART MARK WITH INDELIBLE PEN '175-6020' FOLLOWED BY SERIAL NO. WHERE SHOWN.

ITEM NO.	QTY	PART NO.	DESCRIPTION
3	1	175-6022	FEMUR BUFFER PLATE ASSEMBLY, RIGHT
2	1	9002373	TAPE, ACRYLIC, DOUBLE SIDED
1	1	175-6021	BUFFER, UPPER FEMUR, RIGHT

PART LIST

UNITS ARE millimeters

TOLERANCES ARE: *

DECIMALS:
X ±0.5
.X ±0.1
.XX ±0.05

ANGLES: ±0.5°

MACHINED: 63

* unless otherwise noted

MATERIAL

SCALE 1.000

APPROVALS	DATE
DRAWN	
CHECKED	
ENGINEER	

NATIONAL HIGHWAY TRAFFIC SAFETY ADMINISTRATION

FEMUR BUFFER ASSEMBLY, RIGHT

SIZE	SHEET	DRAWING NUMBER	REV.
A3	1 OF 1	175-6020	A

REVISION RECORD			
REV.	DESCRIPTION	DATE	BY
A	NHTSA PART 575 NPRM RELEASE	7/30/04	DW

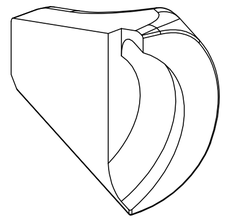

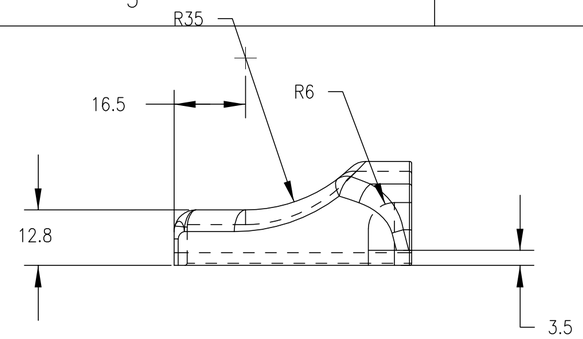

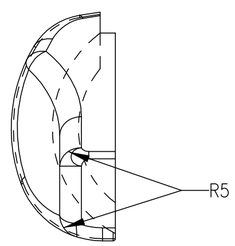

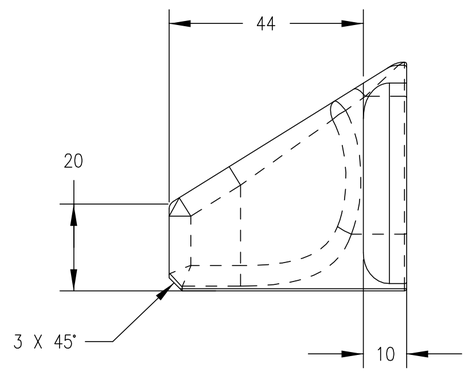

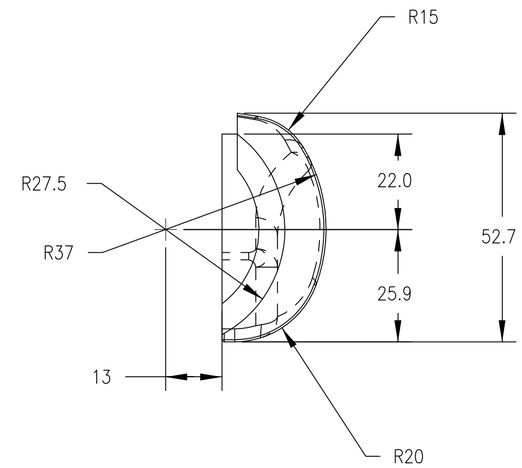

NOTES:

1. HARDNESS: 73±3 SHORE 00
2. THIS IS A MOLDED PART. DIMENSIONS SHOWN ARE FOR REFERENCE ONLY.
3. TOLERANCE OF ±2 MM APPLIED TO ALL DIMENSIONS

ITEM NO.	QTY	PART NO.	DESCRIPTION

PART LIST

UNITS ARE millimeters

TOLERANCES ARE: *

DECIMALS:
X ±0.5
.X ±0.1
.XX ±0.05

ANGLES: ±0.5°

MACHINED: 63

* unless otherwise noted

MATERIAL: POLYURETHANE ELASTOMER

SCALE: 1.000

APPROVALS	DATE
DRAWN	
CHECKED	
ENGINEER	

NATIONAL HIGHWAY TRAFFIC SAFETY ADMINISTRATION

BUFFER, UPPER FEMUR, RIGHT

SIZE	SHEET	DRAWING NUMBER	REV.
A2	1 OF 1	175-6021	A

REVISION RECORD			
REV.	DESCRIPTION	DATE	BY
A	NHTSA PART 575 NPRM RELEASE	7/30/04	DW

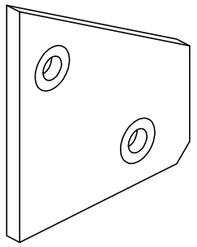

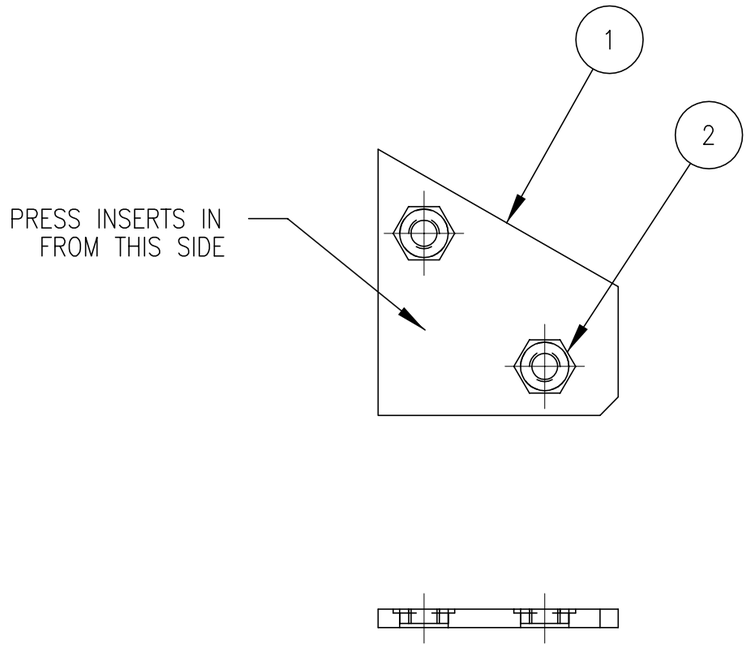

ITEM NO.	QTY	PART NO.	DESCRIPTION
2	2	5000113	PEM FLUSH NUT, M5 X 0.8
1	1	175-6018	PLATE, FEMUR BUFFER

PART LIST

UNITS ARE millimeters

TOLERANCES ARE: *

DECIMALS:
X ±0.5
.X ±0.1
.XX ±0.05

ANGLES: ±0.5°

MACHINED: 63

* unless otherwise noted

MATERIAL		
SCALE 1.000		
APPROVALS	DATE	
DRAWN		
CHECKED		
ENGINEER		

NATIONAL HIGHWAY TRAFFIC SAFETY ADMINISTRATION

FEMUR BUFFER PLATE ASSEMBLY, RIGHT

SIZE	SHEET	DRAWING NUMBER	REV.
A3	1 OF 1	175-6022	A

REVISION RECORD			
REV.	DESCRIPTION	DATE	BY
A	NHTSA PART 575 NPRM RELEASE	7/30/04	DW

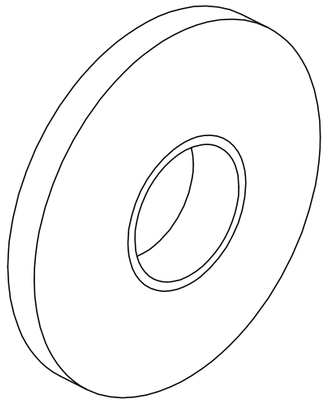

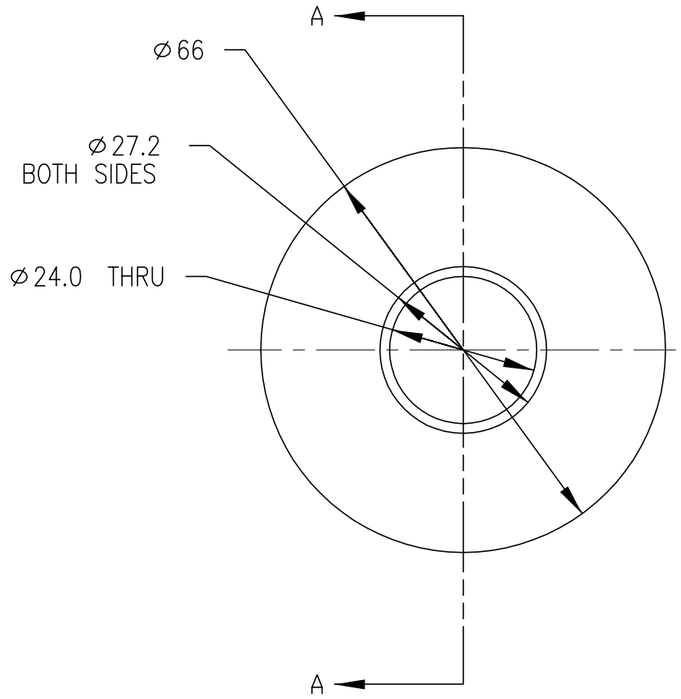

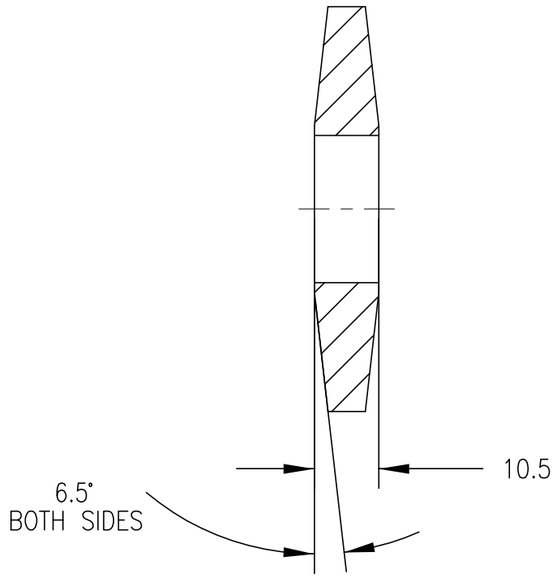

SECTION A-A

NOTES:

1. MATERIAL: 67.5±2.5 SHORE 'A'.
2. TOLERANCE OF ±1 MM APPLIED TO ALL DIMENSIONS.

ITEM NO.	QTY	PART NO.	DESCRIPTION

PART LIST

UNITS ARE millimeters

TOLERANCES ARE: *

DECIMALS:
X ±0.5
.X ±0.1
.XX ±0.05

ANGLES: ±0.5°

MACHINED: 63

* unless otherwise noted

MATERIAL: BUTYL RUBBER (BLACK)

SCALE: 1.000

APPROVALS	DATE
DRAWN	
CHECKED	
ENGINEER	

NATIONAL HIGHWAY TRAFFIC SAFETY ADMINISTRATION

BACK PLATE BUFFER

SIZE	SHEET	DRAWING NUMBER	REV.
A3	1 OF 1	175-6025	A

REVISION RECORD			
REV.	DESCRIPTION	DATE	BY
A	NHTSA PART 575 NPRM RELEASE	7/30/04	DW

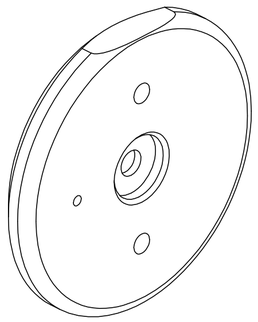

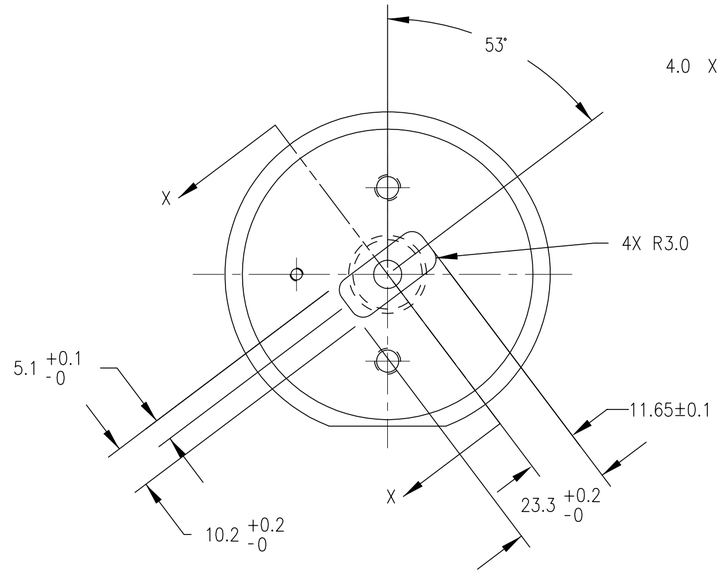

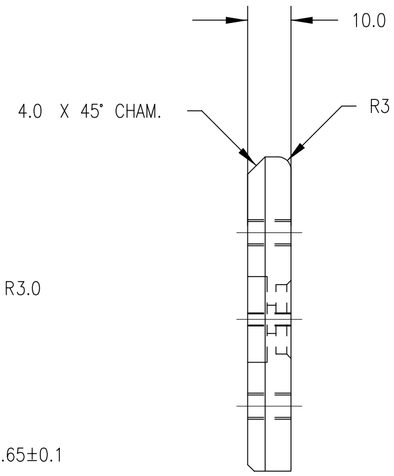

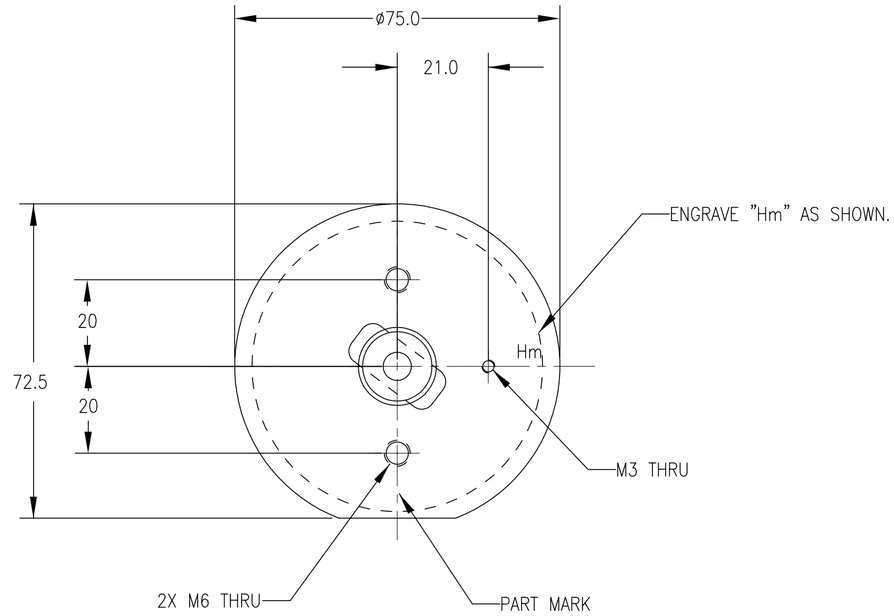

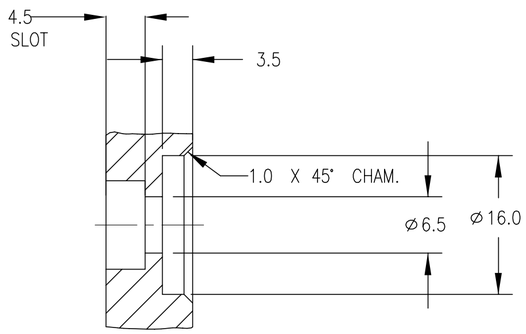

SCRAP SECTION X-X
SCALE 2.00

NOTES

1. SURFACE FINISH TO BE 0.8 OR BETTER ALL OVER UNLESS OTHERWISE STATED.
2. REMOVE ALL SHARP EDGES AND BURRS PRIOR TO PLATING.
3. FINISH: ZINC PLATE AND COLOR PASSIVATE.
4. VIBRO ETCH '175-6026' FOLLOWED BY SERIAL No WHERE SHOWN

ITEM NO.	QTY	PART NO.	DESCRIPTION

PART LIST

UNITS ARE millimeters

TOLERANCES ARE: *

DECIMALS:
X ±0.5
.X ±0.1
.XX ±0.05

ANGLES: ±0.5°

MACHINED: 63

* unless otherwise noted

MATERIAL: 080M40 STEEL (EN8)

SCALE: 1.000

APPROVALS	DATE
DRAWN	
CHECKED	
ENGINEER	

NATIONAL HIGHWAY TRAFFIC SAFETY ADMINISTRATION

BACK PLATE, LEFT

SIZE	SHEET	DRAWING NUMBER	REV.
A2	1 OF 1	175-6026	A

REVISION RECORD			
REV.	DESCRIPTION	DATE	BY
A	NHTSA PART 575 NPRM RELEASE	7/30/04	DW

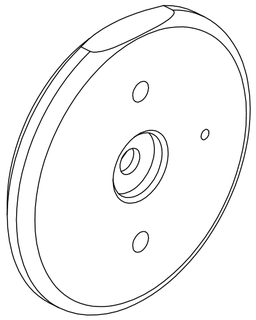

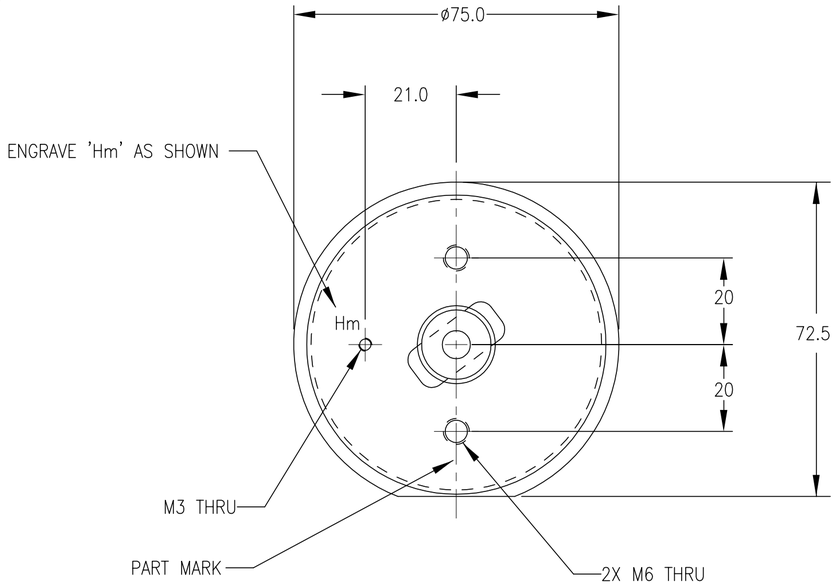

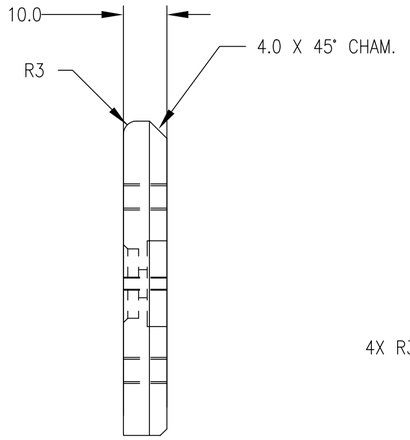

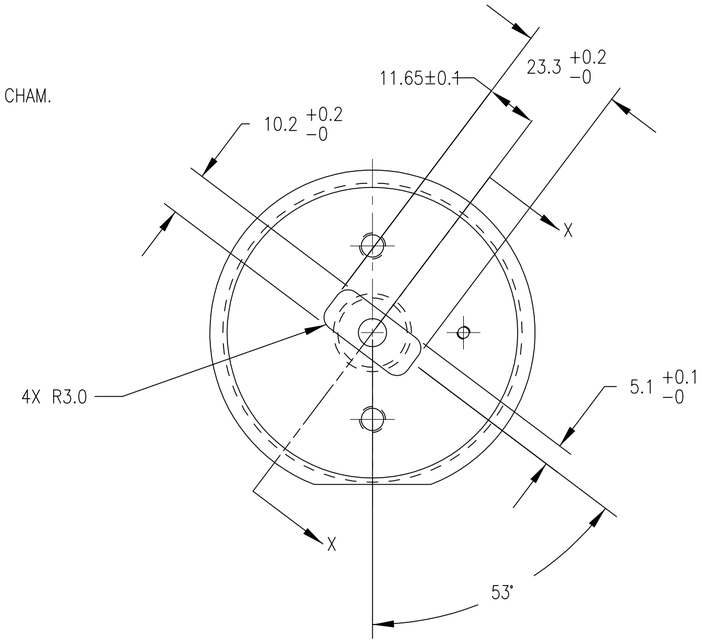

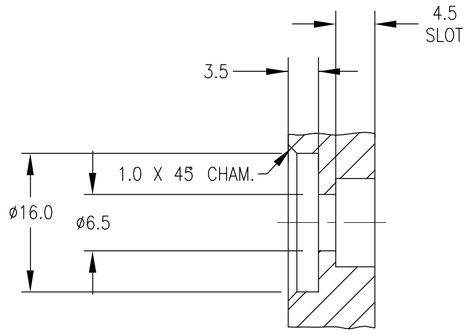

SCRAP SECTION X-X
SCALE 2.00

NOTES

1. SURFACE FINISH TO BE 0.8 OR BETTER ALL OVER UNLESS OTHERWISE STATED.
2. REMOVE ALL SHARP EDGES AND BURRS PRIOR TO PLATING.
3. FINISH: ZINC PLATE AND COLOR PASSIVATE.
4. VIBRO ETCH '175-6027' FOLLOWED BY SERIAL No WHERE SHOWN.

ITEM NO.	QTY	PART NO.	DESCRIPTION

PART LIST

UNITS ARE millimeters

TOLERANCES ARE: *

DECIMALS:
X ±0.5
.X ±0.1
.XX ±0.05

ANGLES: ±0.5°

MACHINED: 63

* unless otherwise noted

MATERIAL: 080M40 STEEL (EN8)

SCALE: 1.000

APPROVALS	DATE
DRAWN	
CHECKED	
ENGINEER	

NATIONAL HIGHWAY TRAFFIC SAFETY ADMINISTRATION

BACK PLATE, RIGHT

SIZE	SHEET	DRAWING NUMBER	REV.
A2	1 OF 1	175-6027	A

REVISION RECORD			
REV.	DESCRIPTION	DATE	BY
A	NHTSA PART 575 NPRM RELEASE	7/30/04	DW

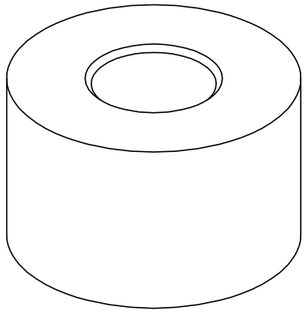

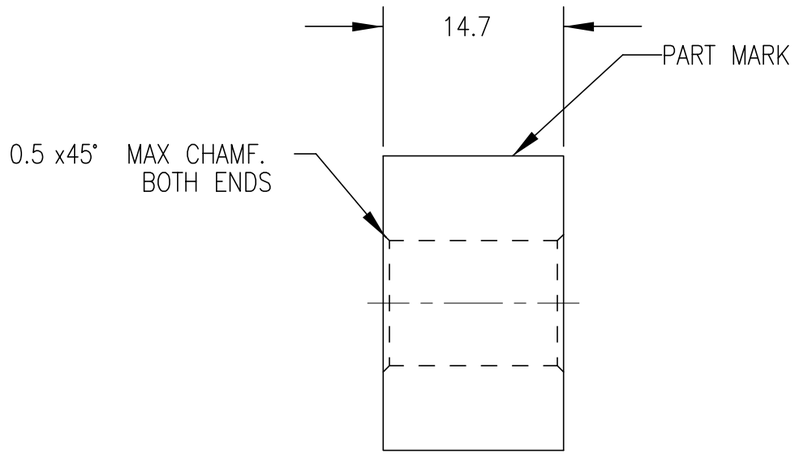

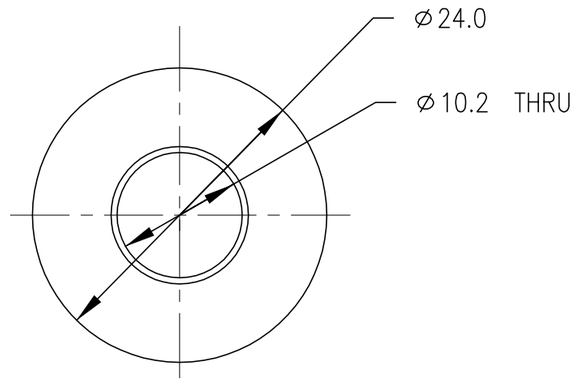

NOTES:

1. SURFACE FINISH TO BE 0.8 OR BETTER ALL OVER UNLESS OTHERWISE STATED.
2. REMOVE ALL BURRS AND BREAK SHARP EDGES PRIOR TO ANODIZING.
3. SILVER ANODIZE TO BS1615, AA10, HOT WATER SEAL.
4. PART MARK WITH INDELIBLE PEN '175-6030' FOLLOWED BY SERIAL NO. WHERE SHOWN.

ITEM NO.	QTY	PART NO.	DESCRIPTION

PART LIST

UNITS ARE millimeters

TOLERANCES ARE: *

DECIMALS:
X ±0.5
.X ±0.1
.XX ±0.05

ANGLES: ±0.5°

MACHINED: 63

* unless otherwise noted

MATERIAL: 6082 (HE30) ALUMINUM

SCALE: 2.000

APPROVALS	DATE
DRAWN	
CHECKED	
ENGINEER	

NATIONAL HIGHWAY TRAFFIC SAFETY ADMINISTRATION

SACRUM SPACER

SIZE	SHEET	DRAWING NUMBER	REV.
A3	1 OF 1	175-6030	A

REVISION RECORD			
REV.	DESCRIPTION	DATE	BY
A	NHTSA PART 575 NPRM RELEASE	7/30/04	DW

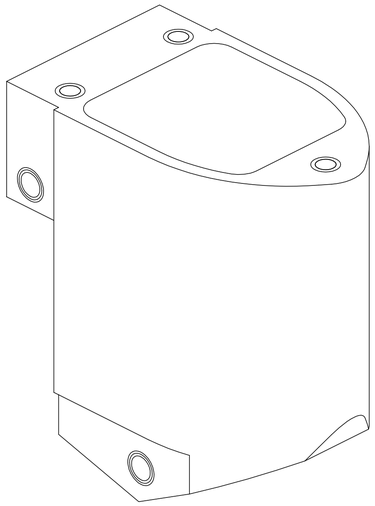

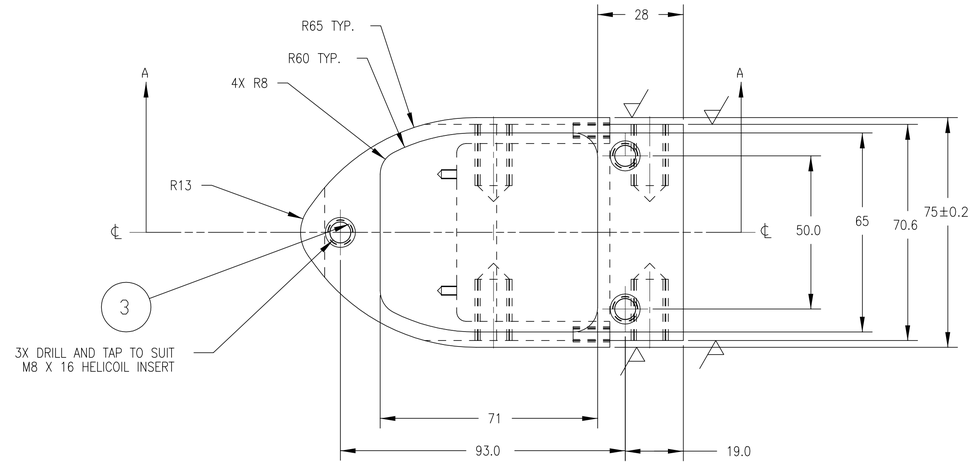

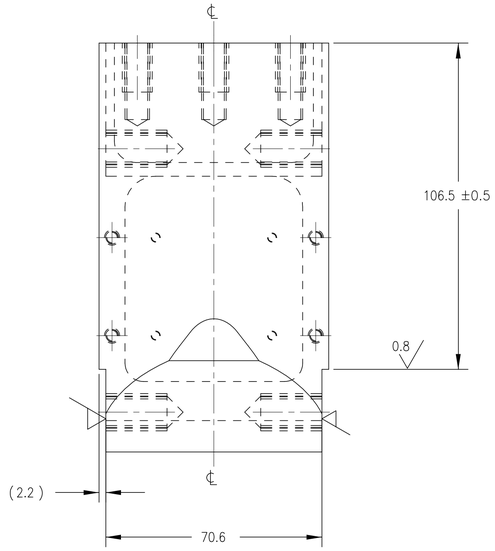

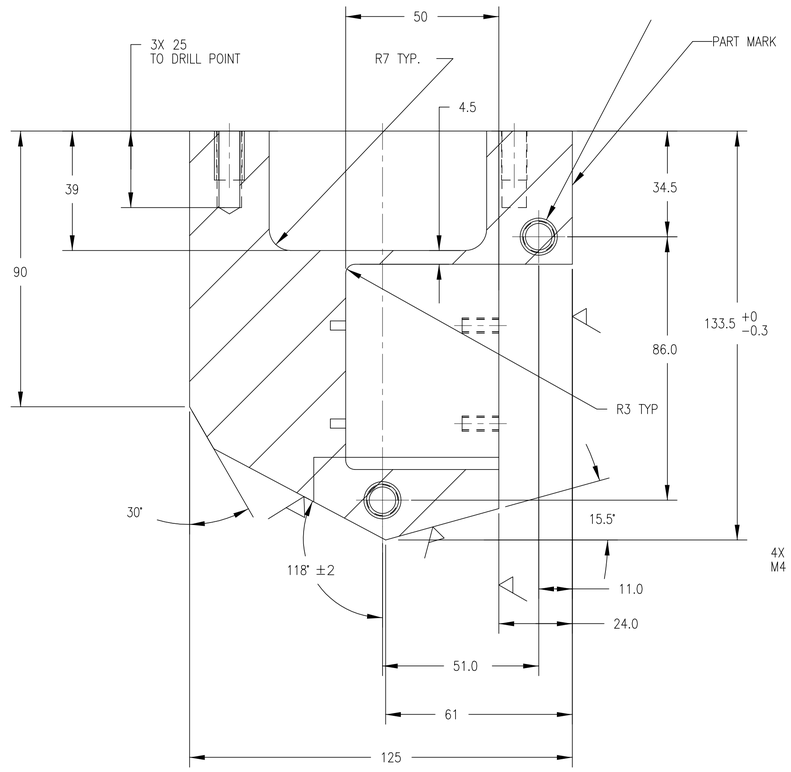

SECTION A-A

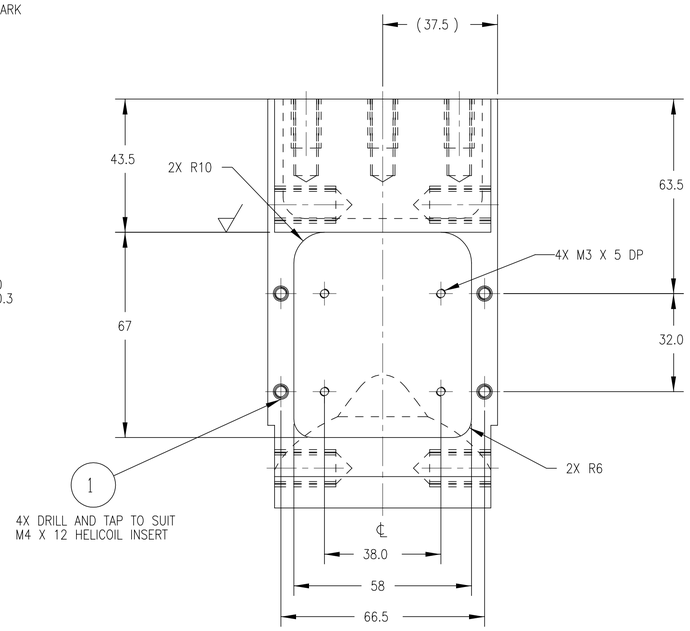

NOTES:

1. 1.5MM MATERIAL TO BE LEFT ON FACES REQUIRING MACHINING.
2. DRAFT ANGLE 1°.
3. HEAT TREAT TO LM25 TF CONDITION BEFORE MACHINING.
4. REMOVE ALL BURRS AND BREAK SHARP EDGES.
5. ALL THREADS TO CONFORM TO BS3643,
6. ALL THREADS TO BE CLEAR & FREE RUNNING.
7. ALL MACHINED SURFACES TO BE STRAIGHT GRAINED.
8. AFTER MACHINING FILL UPPER CAVITY WITH LEAD TO MAKE WHOLE ASS'Y MASS 3KG±10G THEN SEAL WITH PU ELASTOMER.
9. PART MARK WITH INDELIBLE PEN '175-6040' FOLLOWED BY SERIAL NO. WHERE SHOWN.
10. MACHINED SURFACE FINISH TO BE 0.8
11. DIMENSIONS ABOUT CENTER LINE ARE SYMMETRICAL.
12. FINISH: BEAD BLAST.

ITEM NO.	QTY	PART NO.	DESCRIPTION
3	3	5000345	HELICOIL, M8 X 1.25 X 16
2	4	5000044	HELICOIL, M10 X 1.5 X 20
1	4	5000051	HELICOIL, M4 X .7 X 12

PART LIST

UNITS ARE millimeters

TOLERANCES ARE: *

DECIMALS: X ±0.5, .X ±0.1, .XX ±0.05

ANGLES: ±0.5°

MACHINED: 63

* unless otherwise noted

MATERIAL: CAST ALUMINUM

SCALE: 1.000

APPROVALS	DATE
DRAWN	
CHECKED	
ENGINEER	

NATIONAL HIGHWAY TRAFFIC SAFETY ADMINISTRATION

SACRUM BLOCK

SIZE: A1 | SHEET: 1 OF 1 | DRAWING NUMBER: 175-6040 | REV.: A

REVISION RECORD			
REV.	DESCRIPTION	DATE	BY
A	NHTSA PART 575 NPRM RELEASE	7/30/04	DW

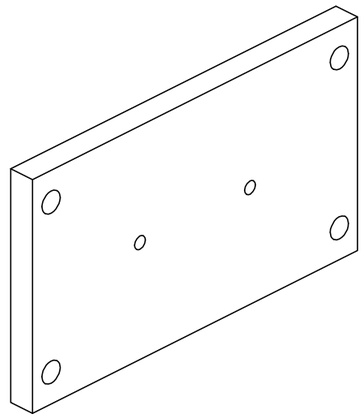

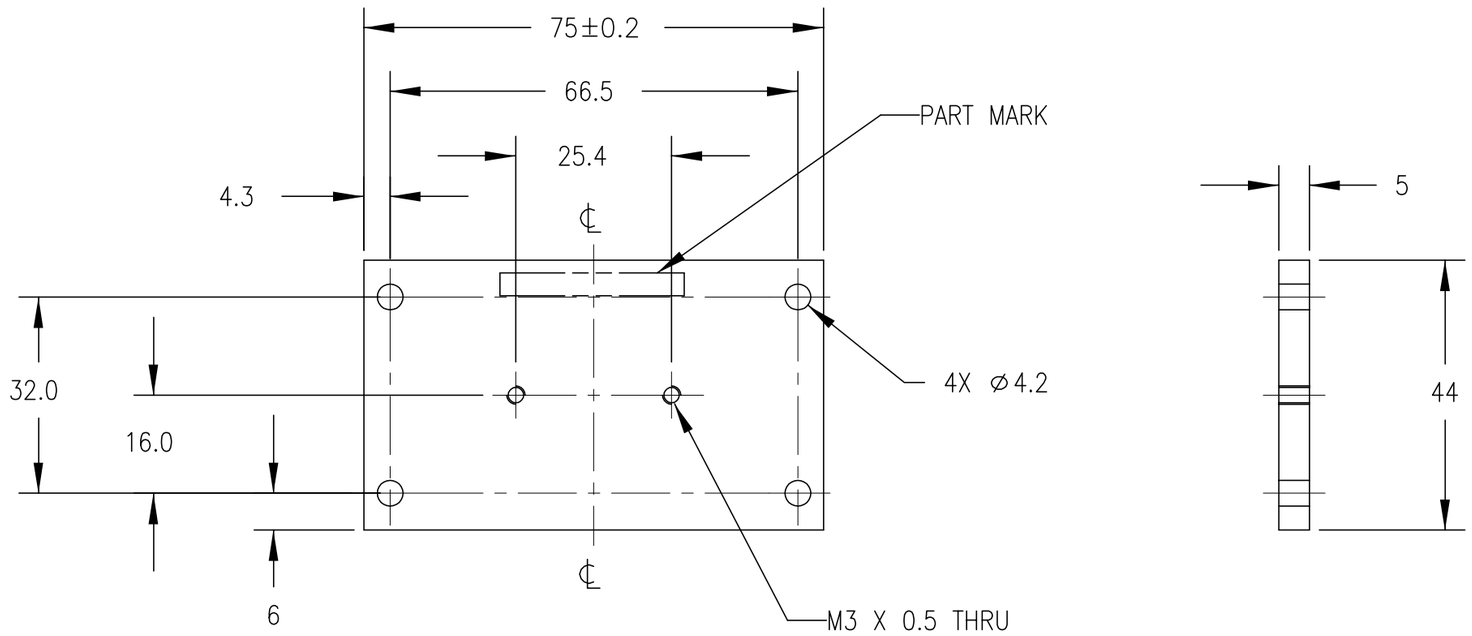

NOTES:

1. SURFACE FINISH TO BE STRAIGHT GRAINED TO OR BETTER ALL OVER UNLESS OTHERWISE STATED. 0.8
2. REMOVE ALL BURRS AND BREAK SHARP EDGES
3. SILVER ANODIZE TO BS1615, AA10, HOT WATER SEAL.
4. PART MARK WITH INDELIBLE PEN '175-6041' FOLLOWED BY SERIAL NO. WHERE SHOWN.

ITEM NO.	QTY	PART NO.	DESCRIPTION

PART LIST

UNITS ARE millimeters

TOLERANCES ARE: *

DECIMALS:
X ±0.5
.X ±0.1
.XX ±0.05

ANGLES: ±0.5°

MACHINED: 63

* unless otherwise noted

MATERIAL: 6082 (HE30) ALUMINUM

SCALE: 1.000

APPROVALS	DATE
DRAWN	
CHECKED	
ENGINEER	

NATIONAL HIGHWAY TRAFFIC SAFETY ADMINISTRATION

SACRUM COVER PLATE

SIZE	SHEET	DRAWING NUMBER	REV.
A3	1 OF 1	175-6041	A

REVISION RECORD			
REV.	DESCRIPTION	DATE	BY
A	NHTSA PART 575 NPRM RELEASE	7/30/04	DW

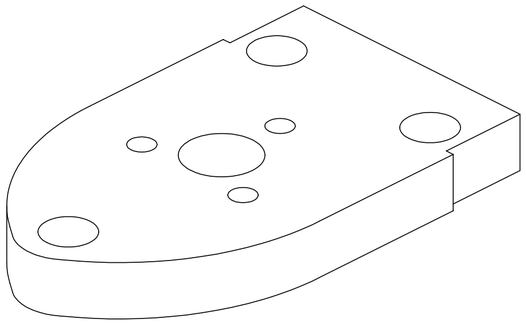

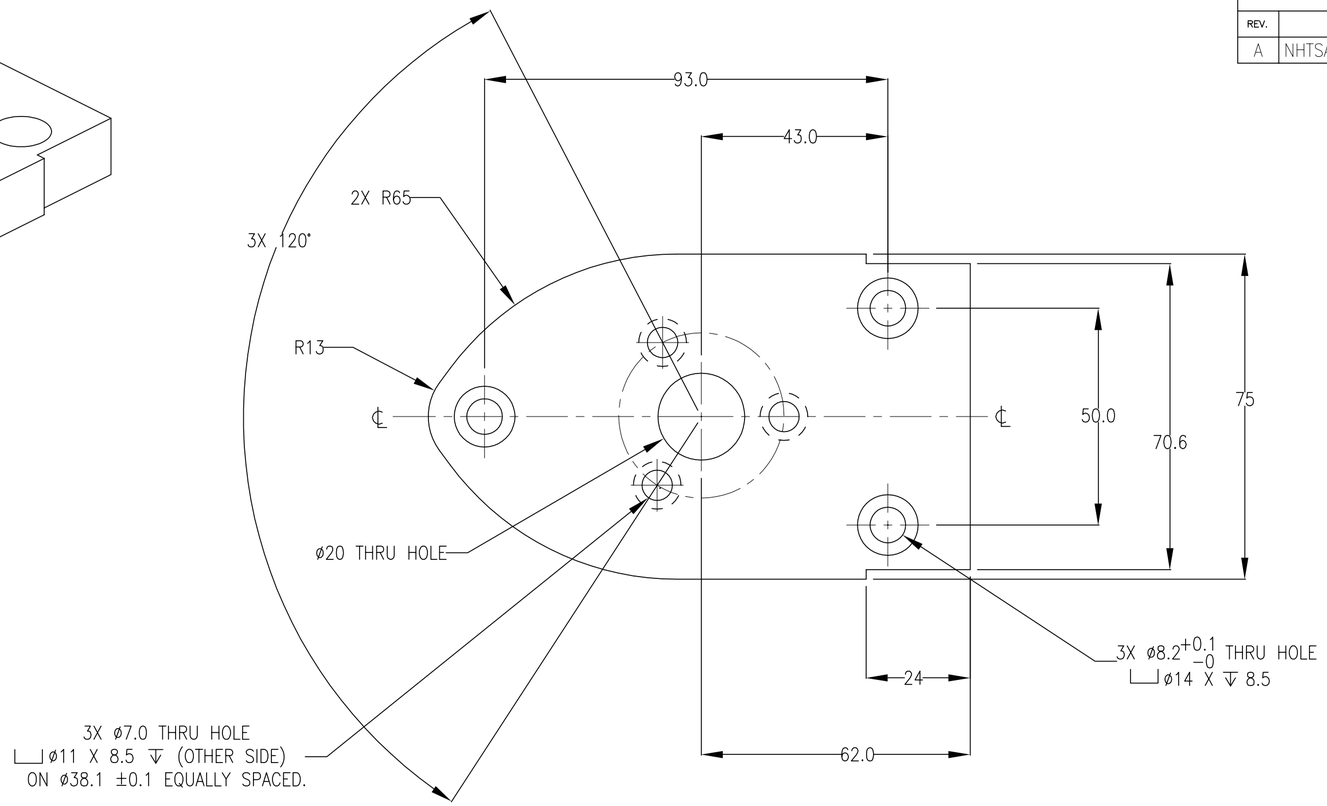

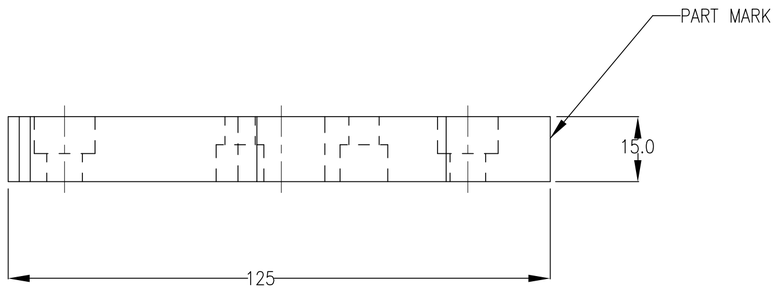

NOTES:

1. SURFACE FINISH TO BE STRAIGHT GRAINED TO 0.8 OR BETTER, ALL OVER UNLESS OTHERWISE STATED.
2. REMOVE ALL BURRS AND BREAK SHARP EDGES PRIOR TO ANODISING.
3. SILVER ANODISE TO BS1615, AA10, HOT WATER SEAL.
4. PART MARK WITH INDELIBLE PEN '175-6045' FOLLOWED BY SERIAL NO. WHERE SHOWN.

ITEM NO.	QTY	PART NO.	DESCRIPTION

PART LIST

UNITS ARE millimeters

TOLERANCES ARE: *

DECIMALS:
X ±0.5
.X ±0.1
.XX ±0.05

ANGLES: ±0.5°

MACHINED: 63

* unless otherwise noted

MATERIAL: 6082 (HE30) ALUMINUM

SCALE: 1.000

APPROVALS	DATE
DRAWN	
CHECKED	
ENGINEER	

NATIONAL HIGHWAY TRAFFIC SAFETY ADMINISTRATION

LUMBAR MOUNTING PLATE

SIZE	SHEET	DRAWING NUMBER	REV.
A2	1 OF 1	175-6045	A

REVISION RECORD			
REV.	DESCRIPTION	DATE	BY
A	NHTSA PART 575 NPRM RELEASE	7/30/04	DW

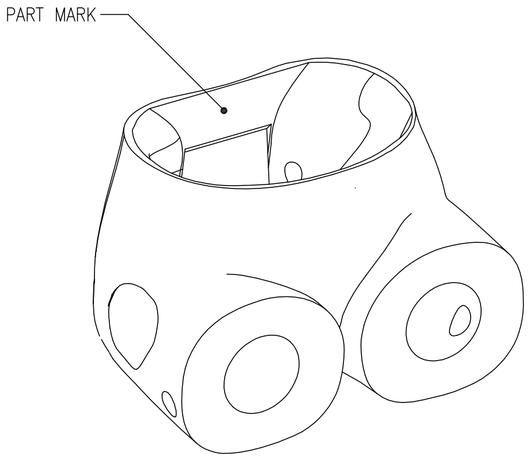

SCALE 0.250

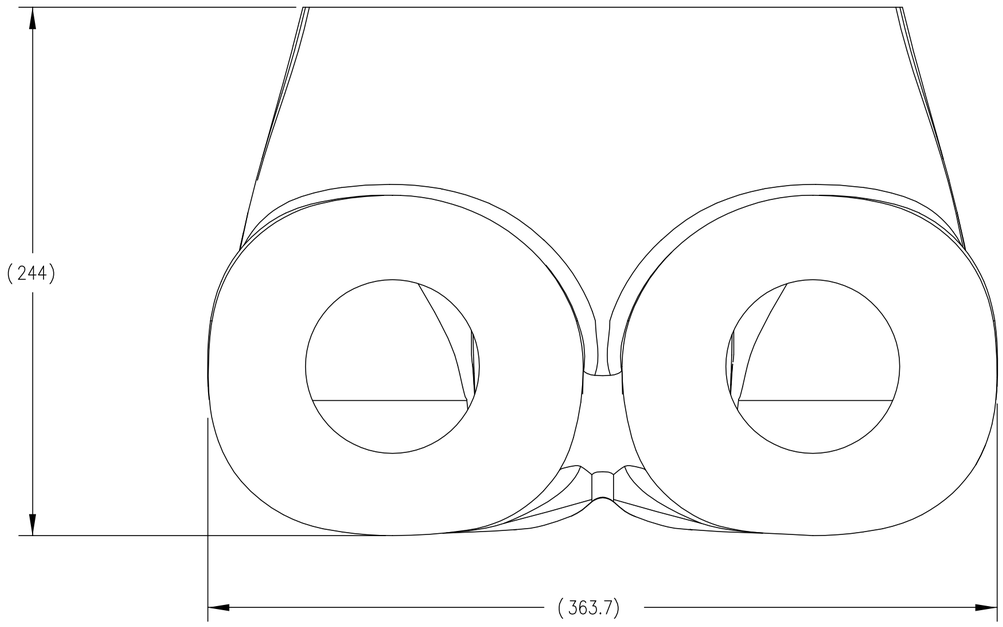

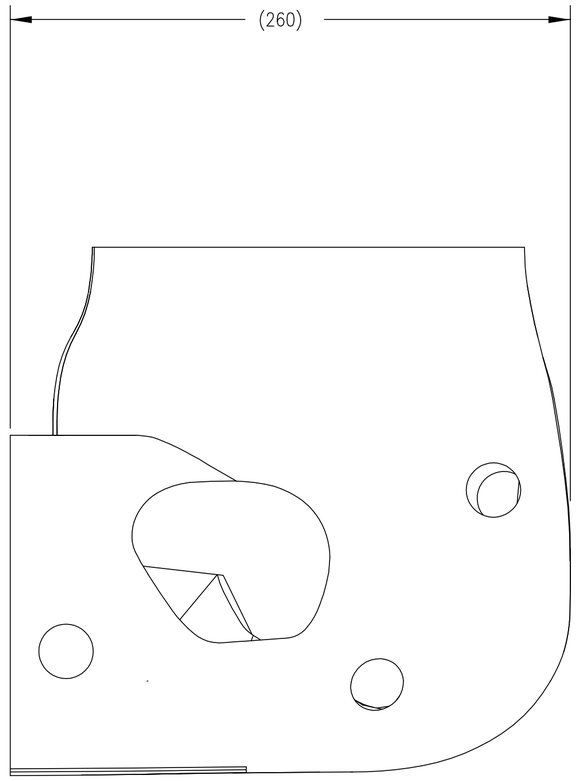

NOTES:

1. EUROSID PELVIS MOLDED TESTED AND CERTIFIED TO LATEST EUROSID-2 SPECIFICATION.
2. MARK WITH INDELIBLE PEN '175-6050' FOLLOWED BY SERIAL NUMBER.
3. UNLESS OTHERWISE SPECIFIED, ALL DIMENSIONS ARE ± 3MM.

ITEM NO.	QTY	PART NO.	DESCRIPTION

PART LIST

UNITS ARE millimeters

TOLERANCES ARE: *

DECIMALS:
X ±0.5
.X ±0.1
.XX ±0.05

ANGLES: ±0.5°

MACHINED: 63

* unless otherwise noted

MATERIAL: PVC/PU FOAM

SCALE: 0.500

APPROVALS	DATE
DRAWN	
CHECKED	
ENGINEER	

NATIONAL HIGHWAY TRAFFIC SAFETY ADMINISTRATION

PELVIS MOLDED, CERTIFIED

SIZE	SHEET	DRAWING NUMBER	REV.
A2	1 OF 1	175-6050	A

REVISION RECORD			
REV.	DESCRIPTION	DATE	BY
A	NHTSA PART 575 NPRM RELEASE	7/30/04	DW

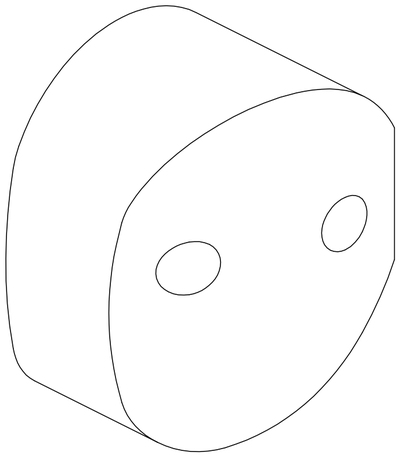

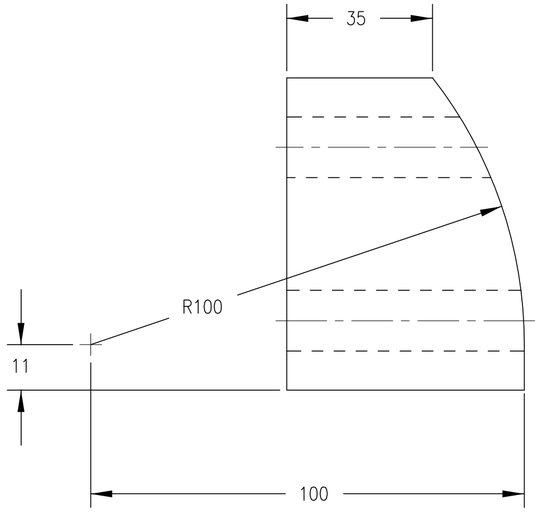

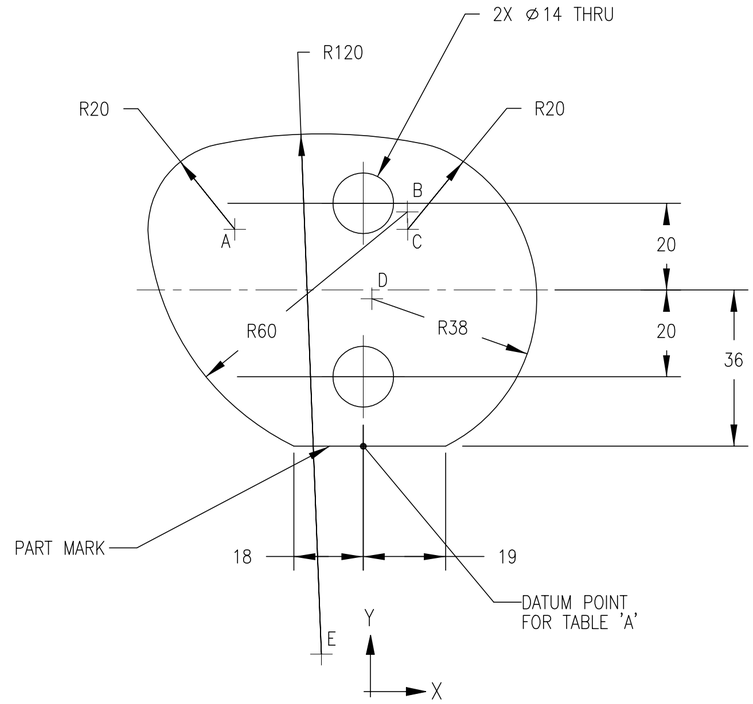

CENTER	X →	Y ↑
A	−30	50
B	10	54
C	10	50
D	2	34
E	−10	−48

TABLE 'A'
CO- ORDINATES OF
RADIUS CENTERS

NOTES:

1. INSIDE OF HOLES ARE NOT TO BE PAINTED.
2. PART MARK '175-6055' FOLLOWED BY SERIAL NO. USING A BLACK INDELIBLE PEN WHERE SHOWN.
3. DIMENSIONS SHOWN ARE TEMPLATE CUTTING DIMENSIONS. ON PART THESE ARE REFERENCE DIMENSIONS DUE TO CUTTING TOLERANCE AND PAINTING.
4. TOLERANCE OF ±2 MM APPLIED TO ALL DIMENSIONS
5. FINISH: PVC PAINT BROWN

ITEM NO.	QTY	PART NO.	DESCRIPTION

PART LIST

UNITS ARE millimeters

TOLERANCES ARE: *

DECIMALS:
X ±0.5
.X ±0.1
.XX ±0.05

ANGLES: ±0.5°

MACHINED: 63

* unless otherwise noted

MATERIAL: CONFOR FOAM CF42

SCALE: 1.000

APPROVALS	DATE
DRAWN	
CHECKED	
ENGINEER	

NATIONAL HIGHWAY TRAFFIC SAFETY ADMINISTRATION

H-POINT FOAM BLOCK, LEFT

SIZE	SHEET	DRAWING NUMBER	REV.
A2	1 OF 1	175-6055	A

REVISION RECORD			
REV.	DESCRIPTION	DATE	BY
A	NHTSA PART 575 NPRM RELEASE	7/30/04	DW

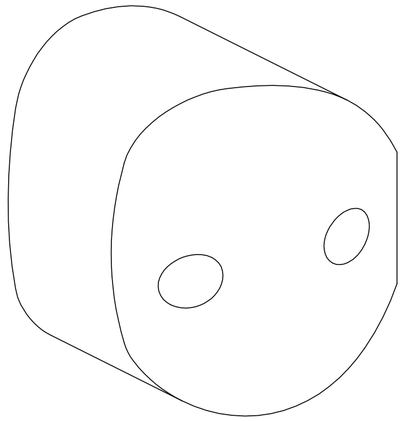

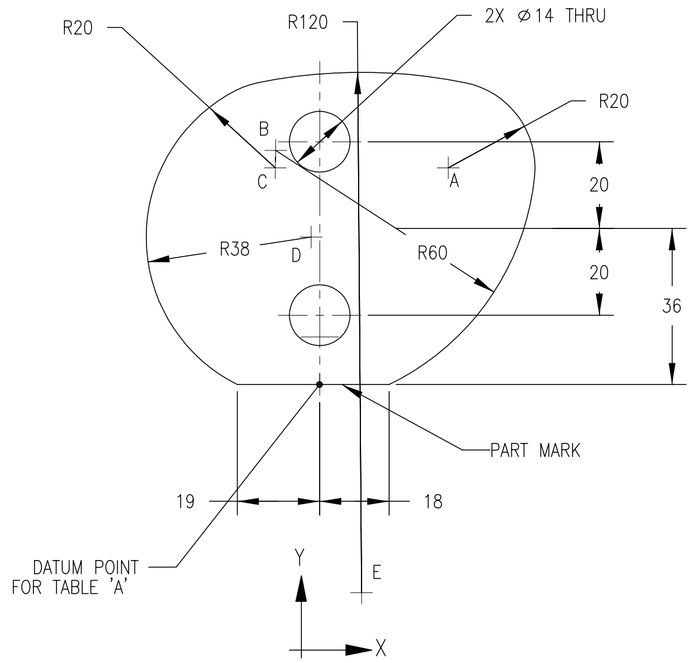

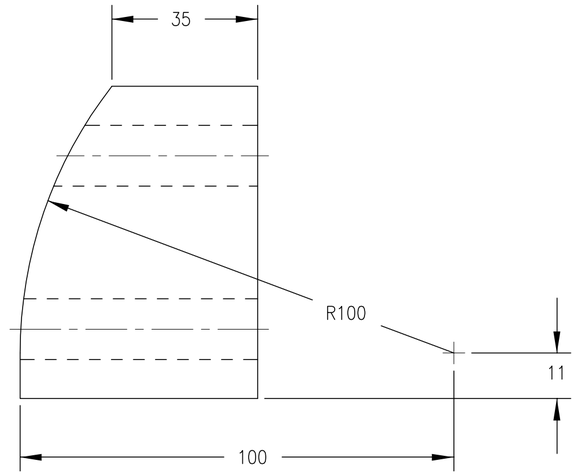

CENTER	X →	Y ↑
A	30	50
B	−10	54
C	−10	50
D	−2	34
E	10	−48

TABLE 'A'
CO-ORDINATES OF
RADIUS CENTERS

NOTES:

1. INSIDE OF HOLES ARE NOT TO BE PAINTED.
2. PART MARK '175-6056' FOLLOWED BY SERIAL NO. A BLACK INDELIBLE PEN WHERE SHOWN.
3. DIMENSIONS SHOWN ARE TEMPLATE CUTTING DIMENSIONS. ON PART THESE ARE REFERENCE DIMENSIONS DUE TO CUTTING TOLERANCE AND PAINTING.
4. TOLERANCE OF ±2 MM APPLIED TO ALL DIMENSIONS
5. FINISH: PVC PAINT BROWN

ITEM NO.	QTY	PART NO.	DESCRIPTION

PART LIST

UNITS ARE millimeters

TOLERANCES ARE: *

DECIMALS:
X ±0.5
.X ±0.1
.XX ±0.05

ANGLES: ±0.5°

MACHINED: 63

* unless otherwise noted

MATERIAL: CONFOR FOAM CF42

SCALE: 1.000

APPROVALS	DATE
DRAWN	
CHECKED	
ENGINEER	

NATIONAL HIGHWAY TRAFFIC SAFETY ADMINISTRATION

H-POINT FOAM BLOCK, RIGHT

SIZE	SHEET	DRAWING NUMBER	REV.
A2	1 OF 1	175-6056	A

REVISION RECORD			
REV.	DESCRIPTION	DATE	BY
A	NHTSA PART 575 NPRM RELEASE	7/30/04	DW

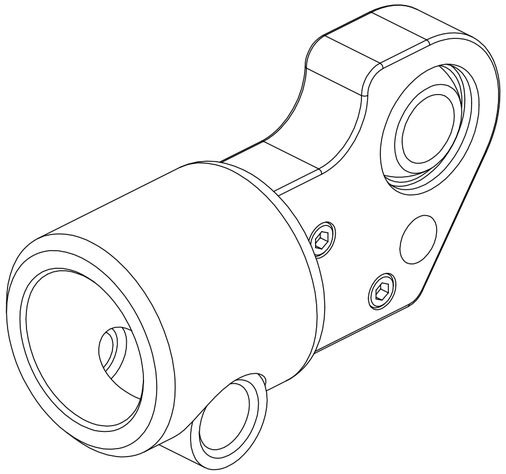

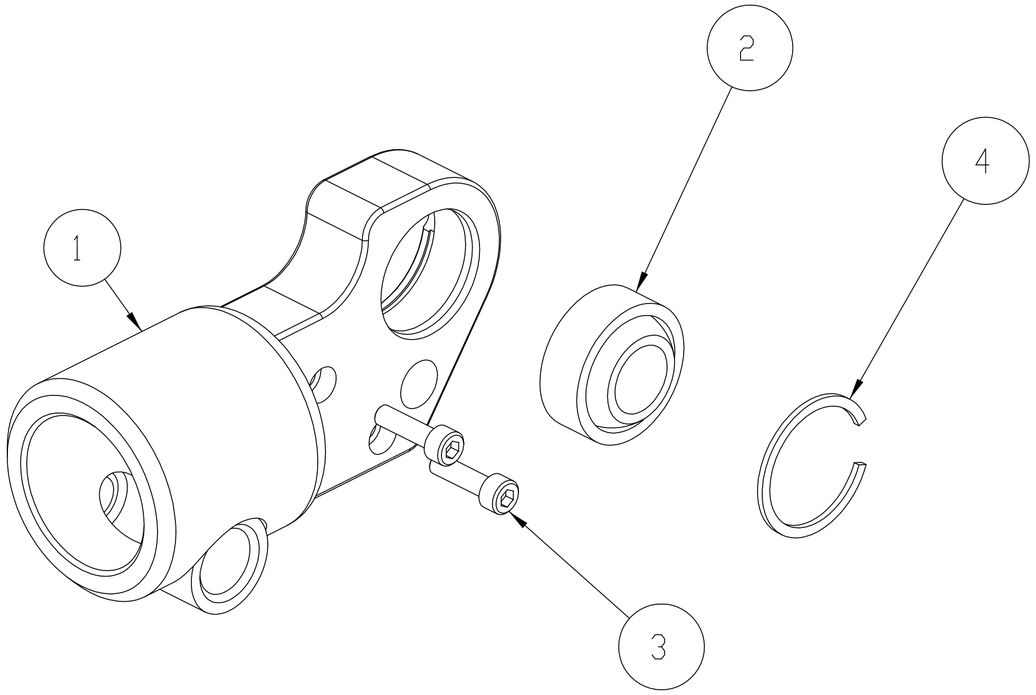

ITEM NO.	QTY	PART NO.	DESCRIPTION
4	1	5000111	BR35 BEARING SNAP CLIP
3	2	5000297	SCREW, LHCS M5 X 18
2	1	5000110	BEARING, SPHERICAL, 17mm ID
1	1	175-6061	UPPER FEMUR WELDMENT, LEFT

PART LIST

UNITS ARE millimeters

TOLERANCES ARE: *

DECIMALS:
X ±0.5
.X ±0.1
.XX ±0.05

ANGLES: ±0.5°

MACHINED: 63

* unless otherwise noted

MATERIAL

SCALE 1.000

APPROVALS	DATE
DRAWN	
CHECKED	
ENGINEER	

NATIONAL HIGHWAY TRAFFIC SAFETY ADMINISTRATION

UPPER FEMUR LH INCLUDE BEARING

SIZE	SHEET	DRAWING NUMBER	REV.
A2	1 OF 1	175-6060	A

REVISION RECORD			
REV.	DESCRIPTION	DATE	BY
A	NHTSA PART 575 NPRM RELEASE	7/30/04	DW

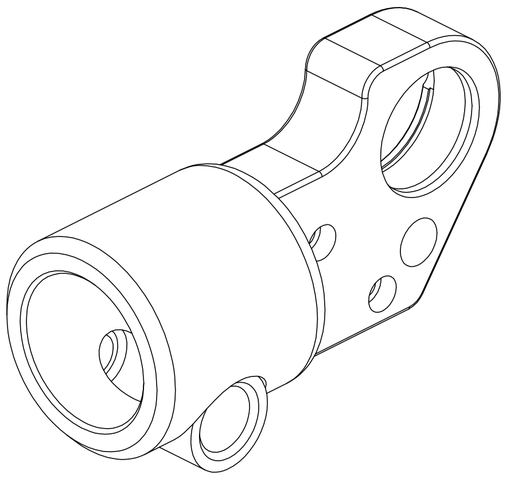

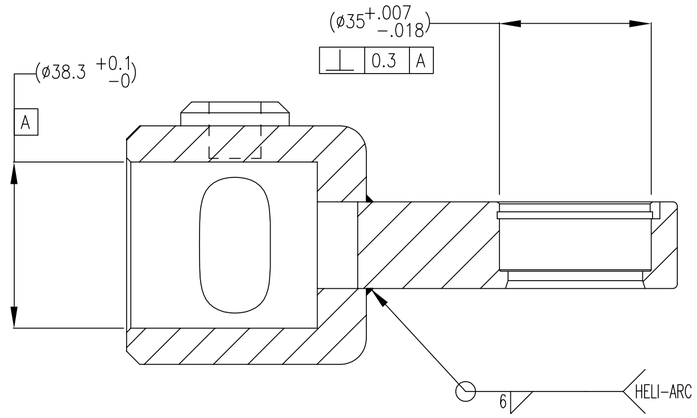

SECTION A-A

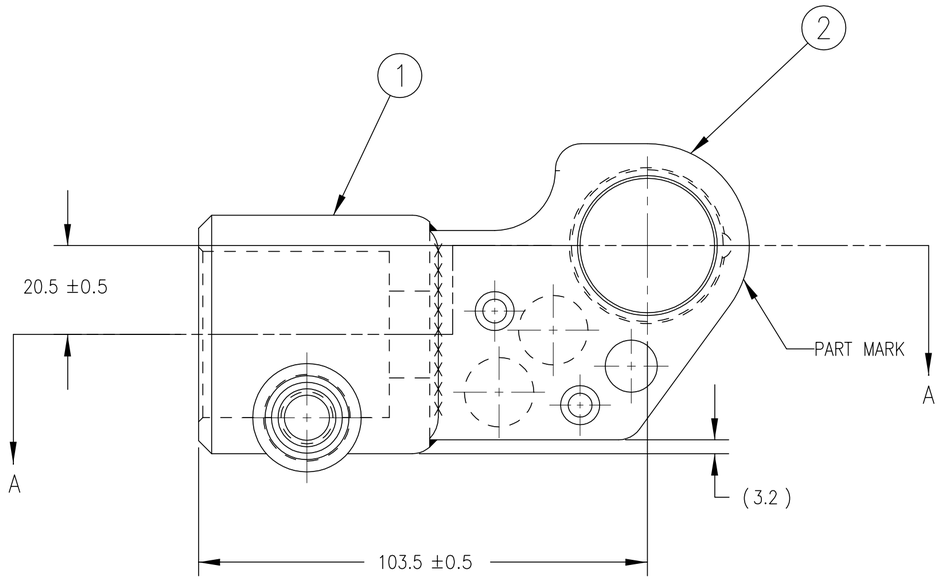

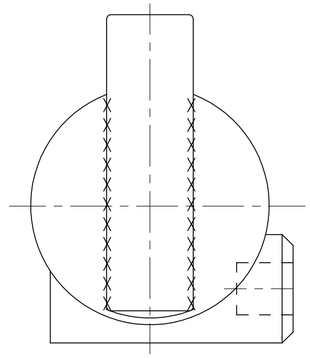

NOTES:

1. CHECK BORE DIMENSIONS SHOWN TO ENSURE THERE HAS BEEN NO DISTORTION ON WELDING
2. VIBRO ETCH '175-6061' FOLLOWED BY SERIAL No WHERE SHOWN
3. FINISH: CHEMI-BLACK

ITEM NO.	QTY	PART NO.	DESCRIPTION
2	1	175-6063	FEMUR BEARING PLATE, LEFT
1	1	175-6062	FEMUR SPIGOT, LEFT

PART LIST

UNITS ARE millimeters

TOLERANCES ARE: *

DECIMALS:
X ±0.5
.X ±0.1
.XX ±0.05

ANGLES: ±0.5°

MACHINED: 63

* unless otherwise noted

MATERIAL

SCALE 1.000

APPROVALS	DATE
DRAWN	
CHECKED	
ENGINEER	

NATIONAL HIGHWAY TRAFFIC SAFETY ADMINISTRATION

UPPER FEMUR WELDMENT, LEFT

SIZE	SHEET	DRAWING NUMBER	REV.
A2	1 OF 1	175-6061	A

REVISION RECORD			
REV.	DESCRIPTION	DATE	BY
A	NHTSA PART 575 NPRM RELEASE	7/30/04	DW

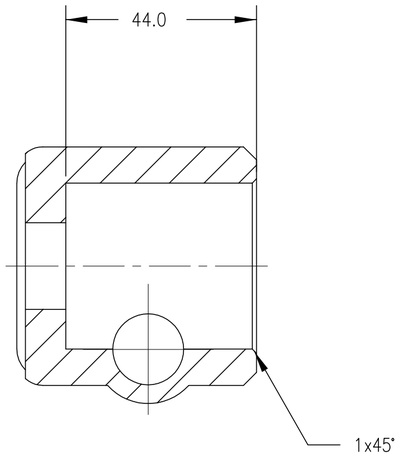

SECTION A-A

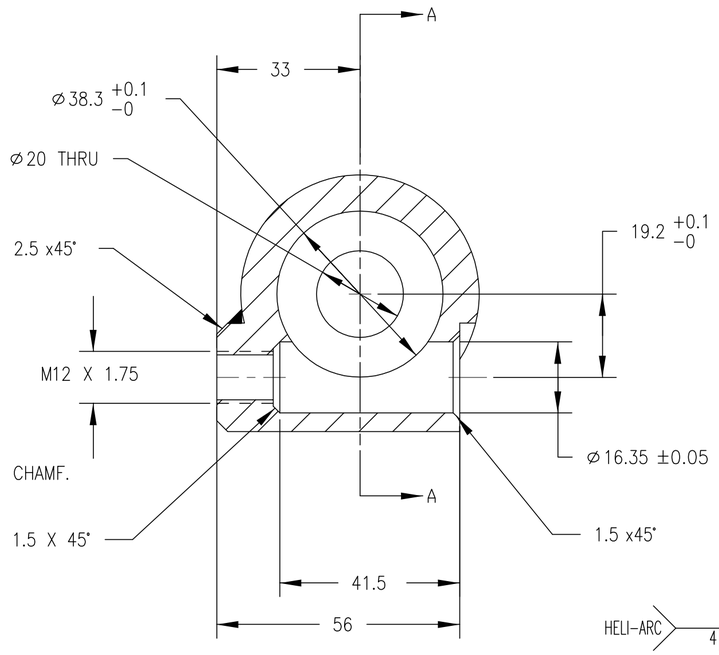

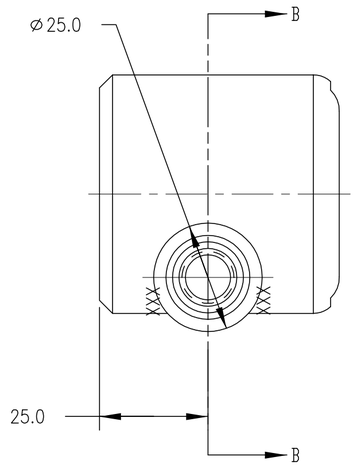

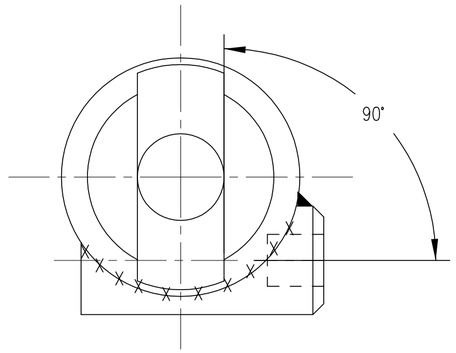

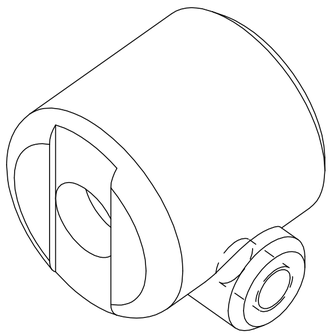

SECTION B-B

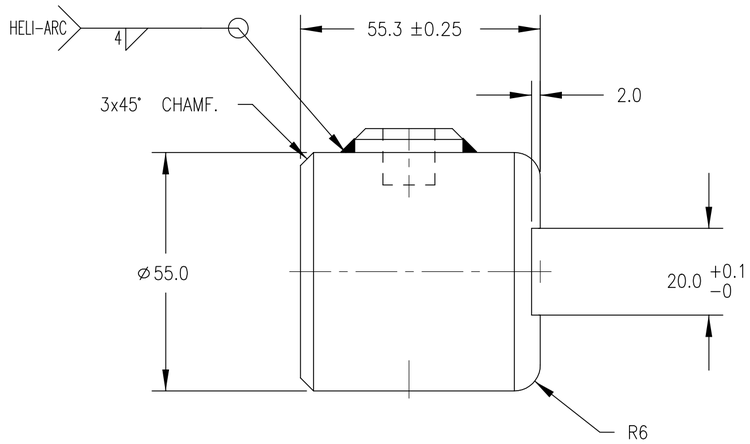

NOTES:
1. WELDS TO CONFORM TO BS499.
2. THREAD TO CONFORM TO BS3643 AND BE CLEAR RUNNING.
3. REMOVE ALL BURRS AND BREAK ALL SHARP EDGES.

ITEM NO.	QTY	PART NO.	DESCRIPTION

PART LIST

UNITS ARE millimeters

TOLERANCES ARE: *

DECIMALS:
X ±0.5
.X ±0.1
.XX ±0.05

ANGLES: ±0.5°

MACHINED: 63

* unless otherwise noted

MATERIAL: 080M40 STEEL (EN8)

SCALE: 1.000

APPROVALS	DATE
DRAWN	
CHECKED	
ENGINEER	

NATIONAL HIGHWAY TRAFFIC SAFETY ADMINISTRATION

FEMUR SPIGOT, LEFT

SIZE	SHEET	DRAWING NUMBER	REV.
A2	1 OF 1	175-6062	A

REVISION RECORD			
REV.	DESCRIPTION	DATE	BY
A	NHTSA PART 575 NPRM RELEASE	7/30/04	DW

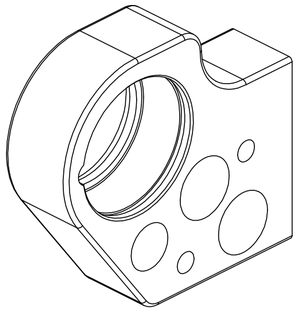

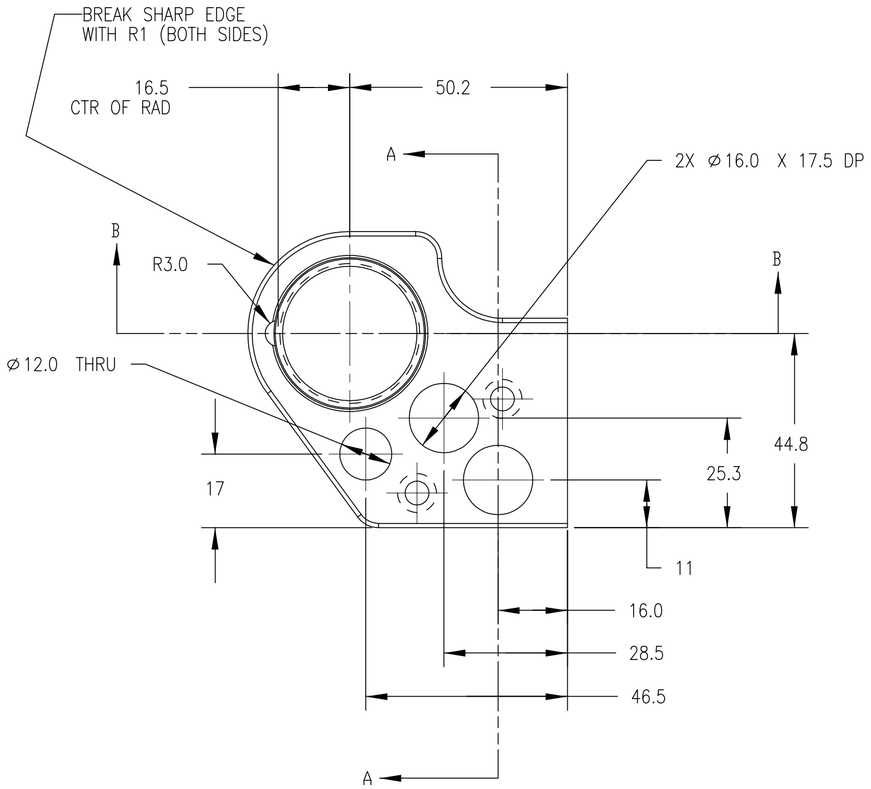

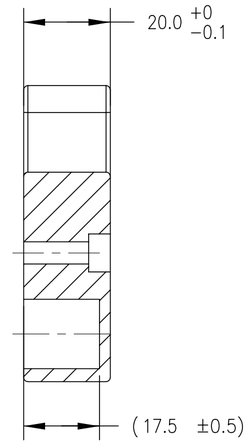

SECTION A–A

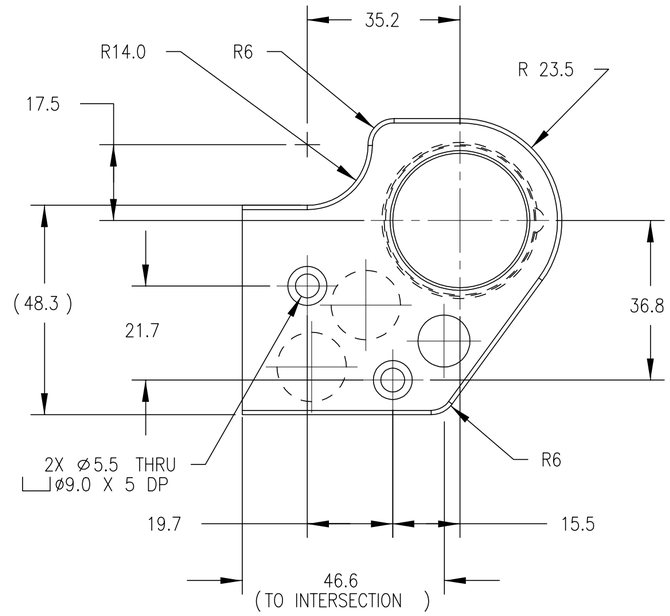

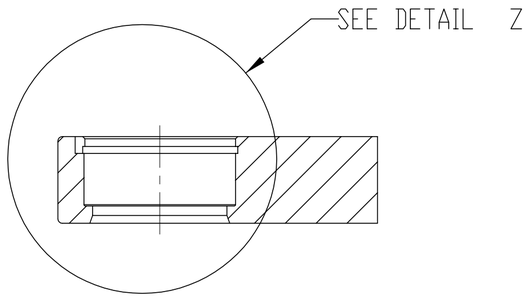

SECTION B-B

DETAIL Z
SCALE 2.00

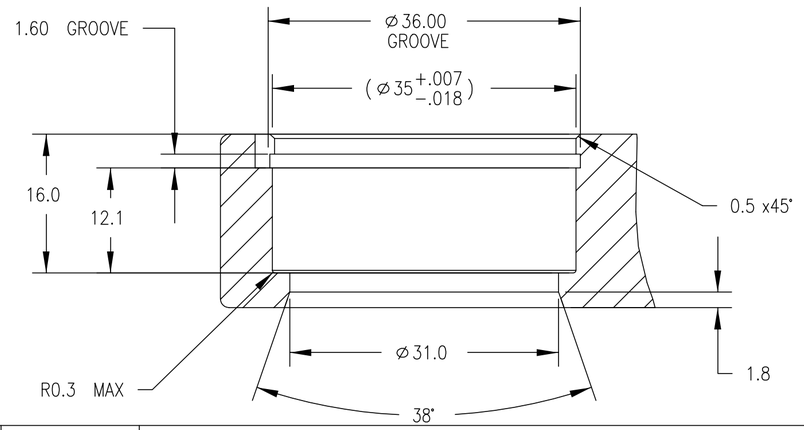

NOTES:

1. REMOVE ALL BURRS AND BREAK SHARP EDGES.

ITEM NO.	QTY	PART NO.	DESCRIPTION

PART LIST

UNITS ARE millimeters

TOLERANCES ARE: *

DECIMALS:
X ±0.5
.X ±0.1
.XX ±0.05

ANGLES: ±0.5°

MACHINED: 63

* unless otherwise noted

MATERIAL: 080M40 STEEL (EN8)

SCALE: 1.000

APPROVALS	DATE
DRAWN	
CHECKED	
ENGINEER	

NATIONAL HIGHWAY TRAFFIC SAFETY ADMINISTRATION

FEMUR BEARING PLATE, LEFT

SIZE	SHEET	DRAWING NUMBER	REV.
A2	1 OF 1	175-6063	A

REVISION RECORD			
REV.	DESCRIPTION	DATE	BY
A	NHTSA PART 575 NPRM RELEASE	7/30/04	DW

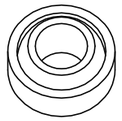

SCALE 0.500

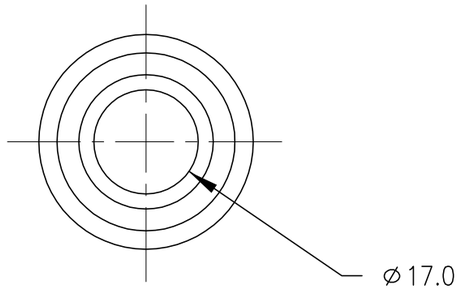

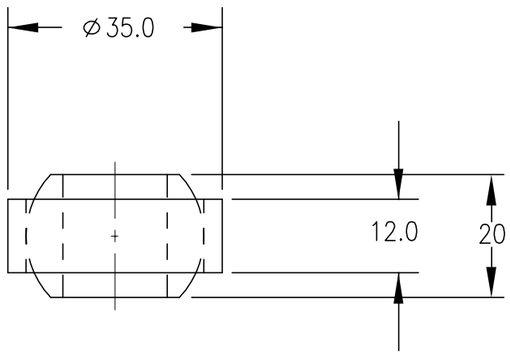

ITEM NO.	QTY	PART NO.	DESCRIPTION

PART LIST

UNITS ARE millimeters

TOLERANCES ARE: *

DECIMALS:
X ±0.5
.X ±0.1
.XX ±0.05

ANGLES: ±0.5°

MACHINED: 63

* unless otherwise noted

MATERIAL	STEEL		
SCALE	1.000		
APPROVALS		DATE	
DRAWN			
CHECKED			
ENGINEER			

NATIONAL HIGHWAY TRAFFIC SAFETY ADMINISTRATION

BEARING, SPHERICAL, 17 ID

SIZE	SHEET	DRAWING NUMBER	REV.
A3	1 OF 1	5000110	A

REVISION RECORD			
REV.	DESCRIPTION	DATE	BY
A	NHTSA PART 575 NPRM RELEASE	7/30/04	DW

SCALE 0.500

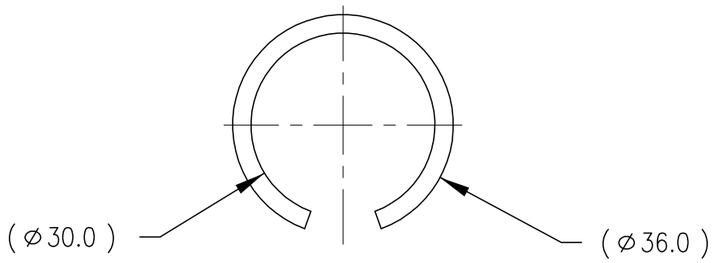

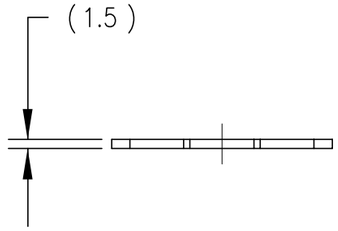

ITEM NO.	QTY	PART NO.	DESCRIPTION

PART LIST

UNITS ARE millimeters

TOLERANCES ARE: *

DECIMALS:
X ±0.5
.X ±0.1
.XX ±0.05

ANGLES: ±0.5°

MACHINED: 63

* unless otherwise noted

MATERIAL	STEEL		
SCALE	1.000		
APPROVALS		DATE	
DRAWN			
CHECKED			
ENGINEER			

NATIONAL HIGHWAY TRAFFIC SAFETY ADMINISTRATION

BEARING SNAP RING

SIZE	SHEET	DRAWING NUMBER	REV.
A3	1 OF 1	5000111	A

REVISION RECORD			
REV.	DESCRIPTION	DATE	BY
A	NHTSA PART 575 NPRM RELEASE	7/30/04	DW

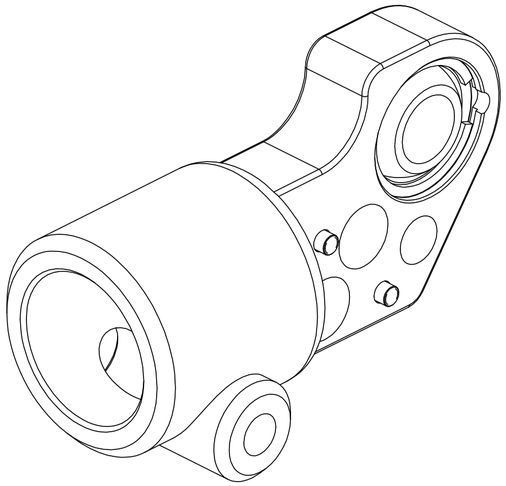

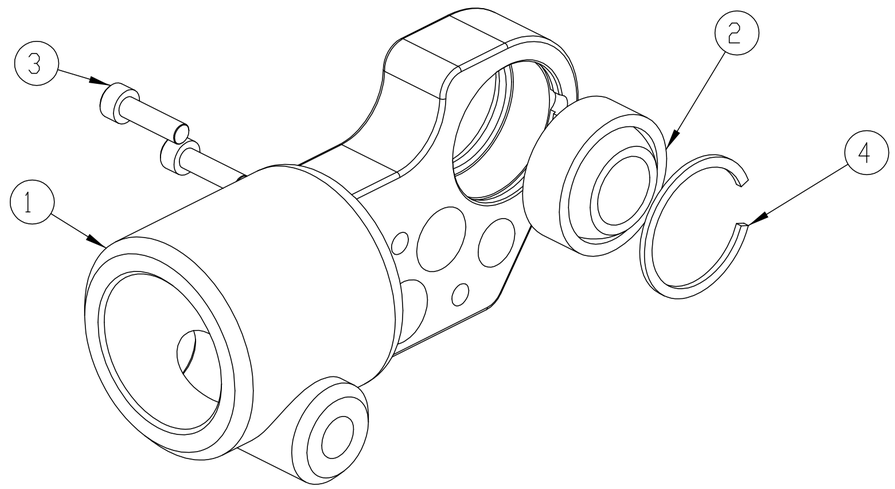

ITEM NO.	QTY	PART NO.	DESCRIPTION
4	1	5000111	BR35 BEARING SNAP CLILP
3	2	5000297	SCREW, LHCS M5 X 18
2	1	5000110	BEARING, SPHERICAL, 17mm ID
1	1	175-6066	UPPER FEMUR WELDMENT, RIGHT

PART LIST

UNITS ARE millimeters

TOLERANCES ARE: *

DECIMALS:
X ±0.5
.X ±0.1
.XX ±0.05

ANGLES: ±0.5°

MACHINED: 63

* unless otherwise noted

MATERIAL

SCALE 1.000

APPROVALS	DATE
DRAWN	
CHECKED	
ENGINEER	

NATIONAL HIGHWAY TRAFFIC SAFETY ADMINISTRATION

UPPER FEMUR RH INCLUDE BEARING

SIZE	SHEET	DRAWING NUMBER	REV.
A2	1 OF 1	175-6065	A

REVISION RECORD			
REV.	DESCRIPTION	DATE	BY
A	NHTSA PART 575 NPRM RELEASE	7/30/04	DW

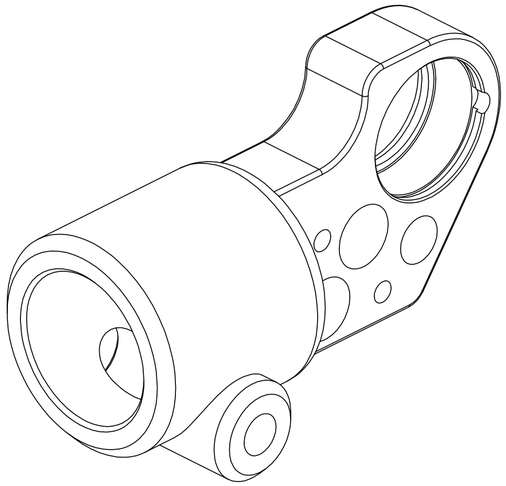

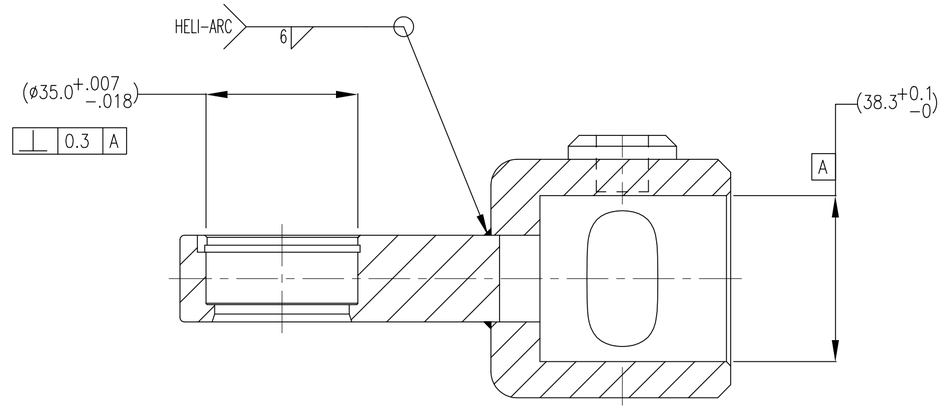

SECTION A-A

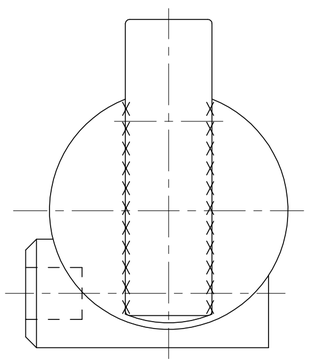

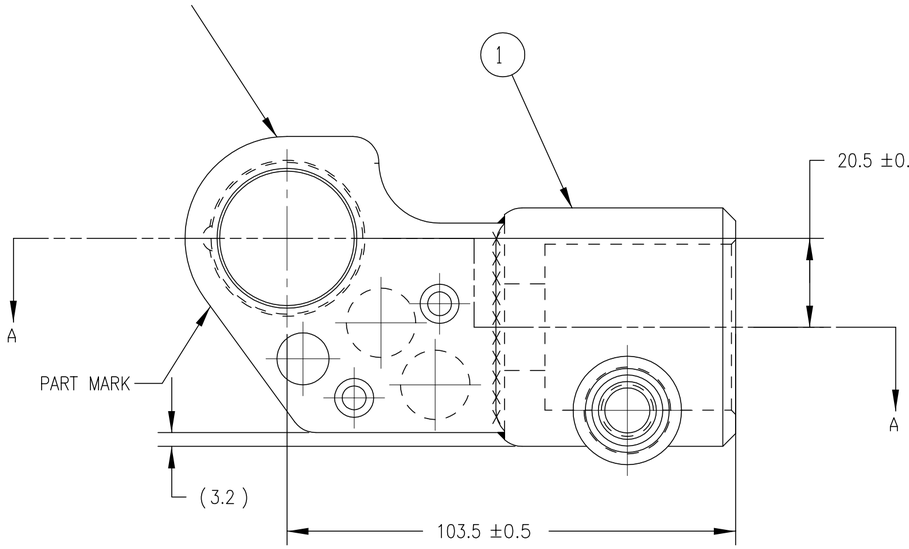

NOTES:

1. CHECK BORE DIMENSIONS SHOWN TO ENSURE THERE HAS BEEN NO DISTORTION ON WELDING
2. VIBRO ETCH '175-6066' FOLLOWED BY SERIAL No WHERE SHOWN
3. FINISH: CHEMI-BLACK

ITEM NO.	QTY	PART NO.	DESCRIPTION
2	1	175-6068	FEMUR BEARING PLATE, RIGHT
1	1	175-6067	FEMUR SPIGOT, RIGHT

PART LIST

UNITS ARE millimeters

TOLERANCES ARE: *

DECIMALS:
X ±0.5
.X ±0.1
.XX ±0.05

ANGLES: ±0.5°

MACHINED: 63

* unless otherwise noted

MATERIAL

SCALE 1.000

APPROVALS	DATE
DRAWN	
CHECKED	
ENGINEER	

NATIONAL HIGHWAY TRAFFIC SAFETY ADMINISTRATION

UPPER FEMUR WELDMENT, RIGHT

SIZE	SHEET	DRAWING NUMBER	REV.
A2	1 OF 1	175-6066	A

REVISION RECORD			
REV.	DESCRIPTION	DATE	BY
A	NHTSA PART 575 NPRM RELEASE	7/30/04	DW

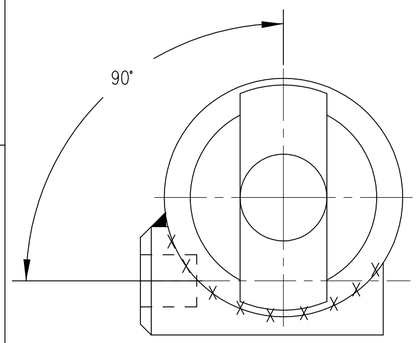

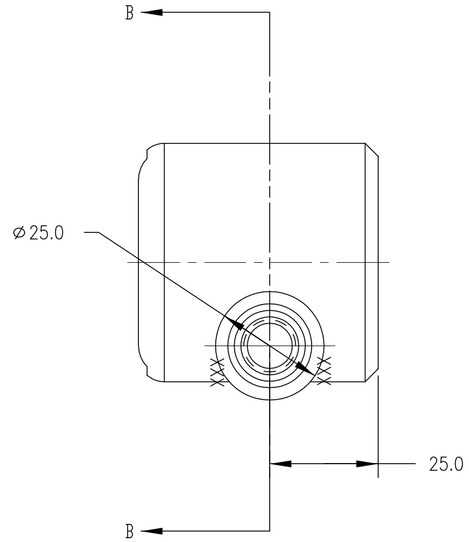

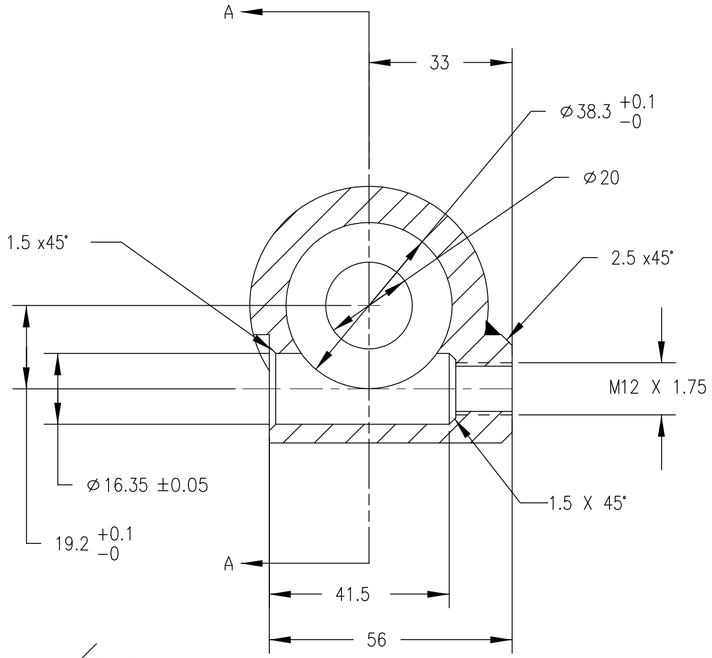

SECTION B-B

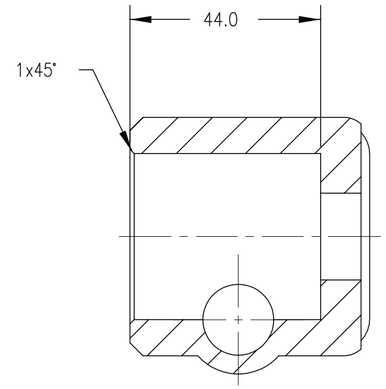

SECTION A-A

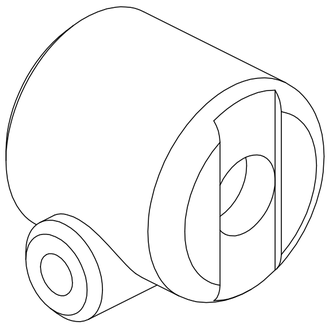

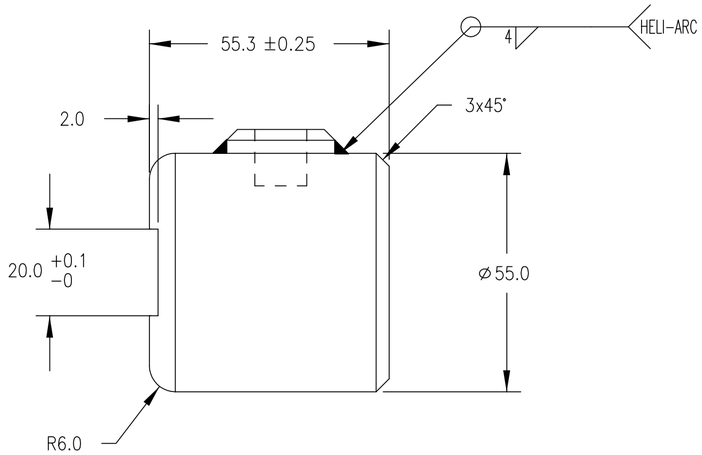

NOTES:

1. WELDS TO CONFORM TO BS499.
2. REMOVE ALL BURRS AND BREAK SHARP EDGES.

ITEM NO.	QTY	PART NO.	DESCRIPTION

PART LIST

UNITS ARE millimeters

TOLERANCES ARE: *

DECIMALS:
X ±0.5
.X ±0.1
.XX ±0.05

ANGLES: ±0.5°

MACHINED: 63

* unless otherwise noted

MATERIAL: 080M40 STEEL (EN8)

SCALE: 1.000

APPROVALS	DATE
DRAWN	
CHECKED	
ENGINEER	

NATIONAL HIGHWAY TRAFFIC SAFETY ADMINISTRATION

FEMUR SPIGOT, RIGHT

SIZE	SHEET	DRAWING NUMBER	REV.
A2	1 OF 1	175-6067	A

REVISION RECORD			
REV.	DESCRIPTION	DATE	BY
A	NHTSA PART 575 NPRM RELEASE	7/30/04	DW

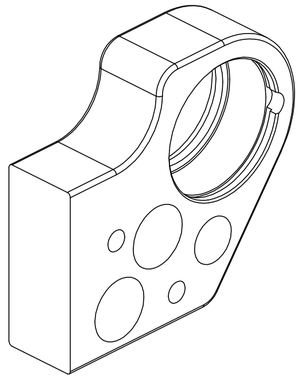

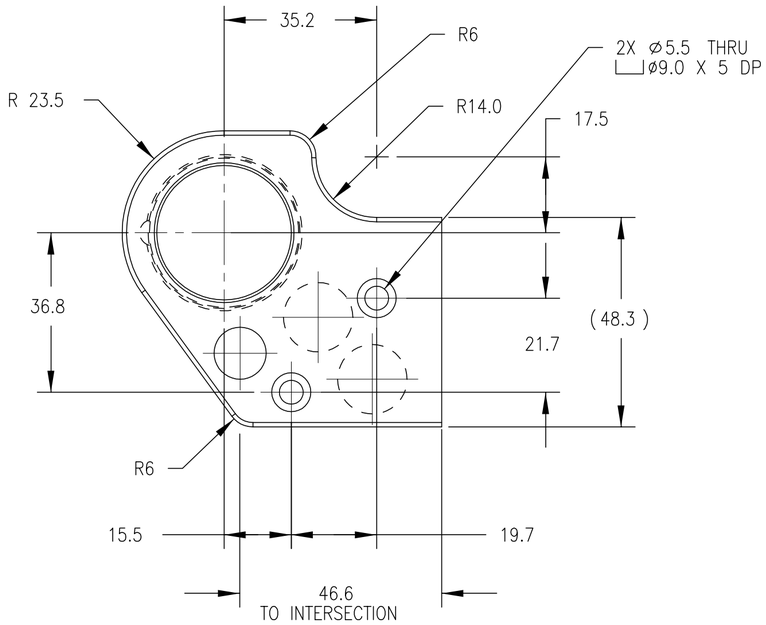

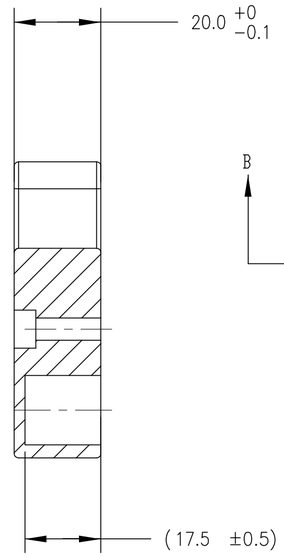

SECTION A-A

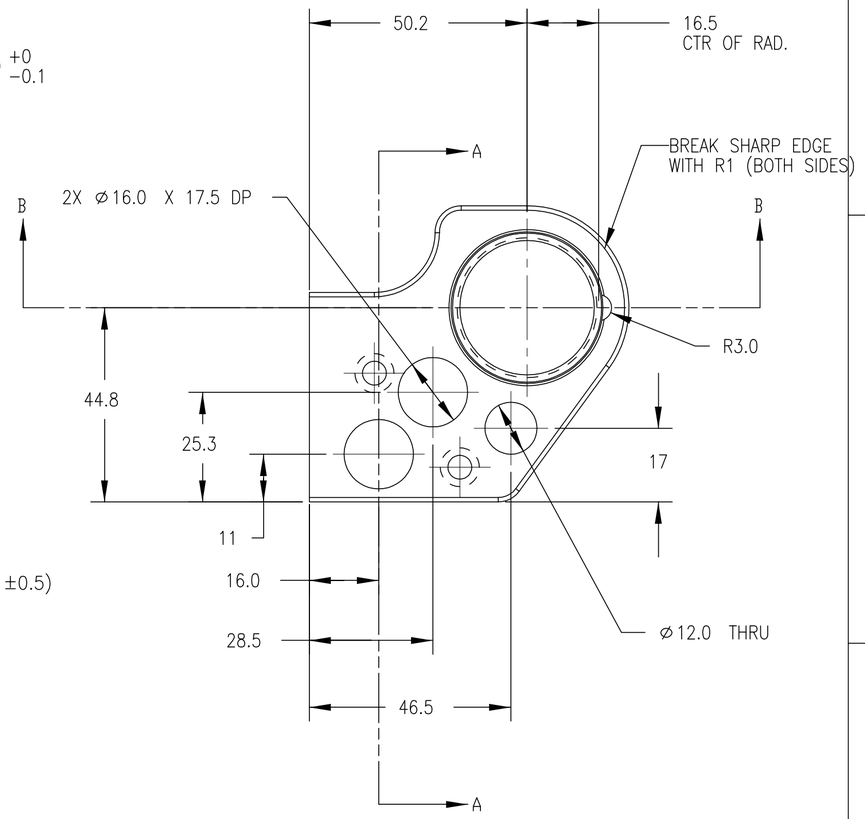

SEE DETAIL Z

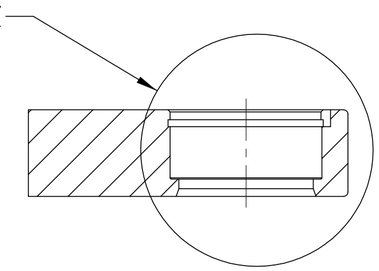

SECTION B-B

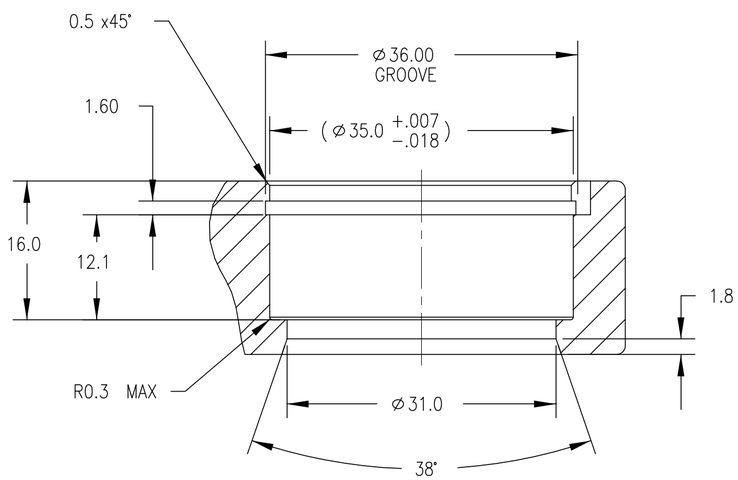

DETAIL Z
SCALE 2.00

NOTES:

1. REMOVE ALL BURRS AND BREAK SHARP EDGES.

ITEM NO.	QTY	PART NO.	DESCRIPTION

PART LIST

UNITS ARE millimeters

TOLERANCES ARE: *

DECIMALS:
X ±0.5
.X ±0.1
.XX ±0.05

ANGLES: ±0.5°

MACHINED: 63

* unless otherwise noted

MATERIAL: 080M40 STEEL (EN8)

SCALE: 1.000

APPROVALS	DATE
DRAWN	
CHECKED	
ENGINEER	

NATIONAL HIGHWAY TRAFFIC SAFETY ADMINISTRATION

FEMUR BEARING PLATE, RIGHT

SIZE	SHEET	DRAWING NUMBER	REV.
A2	1 OF 1	175-6068	A