Will Publish July 31, 2003 in Part 3 of the Federal Register.

[4910-13]

DEPARTMENT OF TRANSPORTATION

Federal Aviation Administration

14 CFR Parts 25, 91, 121, 125, and 135

[Docket No. FAA-2000-7909; Amdt. Nos. 25-110, 91-275, 121-289, 125-43, 135-85]

RIN 2120-AG91

Improved Flammability Standards for Thermal/Acoustic Insulation Materials Used in Transport Category Airplanes

AGENCY: Federal Aviation Administration (FAA), DOT.

ACTION: Final rule.

SUMMARY: The FAA is adopting upgraded flammability standards for thermal and acoustic insulation materials used in transport category airplanes. These standards include new flammability tests and criteria that address flame propagation and entry of an external fire into the airplane. This action is necessary because the current standards do not realistically address situations in which thermal or acoustic insulation materials may contribute to the propagation of a fire. This action is intended to enhance safety by reducing the incidence and severity of cabin fires, particularly those in inaccessible areas where thermal and acoustic insulation materials are installed, and providing additional time for evacuation by delaying the entry of post-crash fires into the cabin.

DATES: This final rule is effective on [~~INSERT DATE 30 DAYS AFTER DATE OF PUBLICATION IN THE FEDERAL REGISTER~~] September 2, 2003. JMA 7/25/03

FOR FURTHER INFORMATION CONTACT: Jeff Gardlin, FAA Airframe and Cabin Safety Branch, ANM-115, Transport Airplane Directorate, Aircraft Certification

Service, 1601 Lind Avenue SW., Renton, Washington 98055-4056; telephone (425) 227-2136, facsimile (425) 227-1149, e-mail: jeff.gardlin@faa.gov.

SUPPLEMENTARY INFORMATION:

Availability of Rulemaking Documents

You can get an electronic copy of this final rule using the Internet by:

(1) Searching the Department of Transportation's electronic Docket Management System (DMS) web page (http://dms.dot.gov/search);

(2) Visiting the Office of Rulemaking's web page at http://www.faa.gov/avr/arm/index.cfm; or

(3) Accessing the Federal Register's web page at http://www.access.gpo.gov/su_docs/aces/aces140.html.

You can also get a copy by submitting a request to the Federal Aviation Administration, Office of Rulemaking, ARM-1, 800 Independence Avenue S.W., Washington, DC 20591, or by calling (202) 267-9680. Make sure to identify the amendment number or docket number of this rulemaking.

Small Business Regulatory Enforcement Fairness Act

The Small Business Regulatory Enforcement Fairness Act (SBREFA) of 1996 requires FAA to comply with small entity requests for information or advice about compliance with statutes and regulations within its jurisdiction. Therefore, any small entity that has a question regarding this document may contact their local FAA official, or the person listed under FOR FURTHER INFORMATION CONTACT. You can find out more about SBREFA on the Internet at our site, http://www.faa.gov/avr/arm/sbrefa.htm. For more information on SBREFA, e-mail us at 9-AWA-SBREFA@faa.gov.

Background

On September 20, 2000, the FAA published a Notice of Proposed Rulemaking (NPRM) in which we proposed to adopt upgraded flammability standards for thermal and acoustic insulation materials used in transport category airplanes. See 65 FR 56992. The NPRM included the following:

- A test to measure the propensity of the insulation to spread a fire; and
- A test to measure the fire penetration resistance of the insulation.

Readers should refer to the NPRM for information about the background of this rulemaking, including descriptions of the following:

- The types of insulation materials used in airplanes;
- Other FAA regulations relating to insulation materials;
- Past incidents involving insulation materials; and
- Fire safety research activities and findings.

The background material in the NPRM also contains the basis and rationale for these requirements and, except where we have specifically expanded on the background elsewhere in this preamble, supports this final rule as if it were contained here. That is, any future discussions regarding the intent of the requirements may refer to the background in the NPRM as though it was in the final rule itself. It is therefore not necessary to repeat the background in this document.

The comment period on the NPRM extended 120 days and closed on January 18, 2001. We received comments on the NPRM from twenty-six commenters, including aircraft manufacturers, insulation manufacturers, aviation industry associations, a labor union, and individuals. None of the commenters disagree with the objectives of

the proposal. Ten of the commenters expressed explicit support for the objectives of the NPRM or for the NPRM in general. We discuss specific, substantive comments in the "Discussion of the Final Rule" section later in this preamble.

Legal Basis for the Final Rule

The FAA's authorizing legislation gives the agency general authority to take actions necessary to carry out the law, including prescribing regulations (49 U.S.C. 40113). The FAA is responsible for promoting safety in civil aviation and, in carrying out that responsibility, has the authority to prescribe minimum standards for the design, material, and construction of aircraft, among other things (49 U.S.C. 44701).

The regulations we are adopting today are intended to enhance the safety of civil aviation by reducing the possibility that insulation materials used in airplanes will contribute to either the spread of fire within airplanes or the penetration of external fire into airplanes. This final rule requires new airplane type designs to include insulation that passes improved flammability tests. It also requires manufacturers of new airplanes that enter service after a phase-in period to equip them with insulation that passes improved flammability tests. Finally, it requires air carriers, operating under part 121, to use insulation meeting the new flame propagation requirements when they replace insulation.

The flammability tests we are adopting today will not eliminate all damage to, or losses of, airplanes by fire, nor prevent all injuries or deaths from airplanes fires. The improved tests will, however, ensure that insulation used in airplanes will resist the propagation of fire and thereby reduce the severity of fires or the speed with which fires spread. They will also ensure that insulation will delay the penetration of the airplanes by

fire from outside. These effects will give flight crews additional time to safely land or taxi, as well as giving both passengers and crew more time to safely evacuate airplanes.

This final rule is focused on the goal of enhancing the safety of civil aviation. The regulations adopted today have their origin in incidents described in the NPRM where insulation that met our previous flammability standards may have contributed to airplane fires. Since we published the NPRM, there have been two more incidents where in-flight fires occurred that involved thermal or acoustic insulation. The flammability tests and criteria adopted today represent the outcome of research conducted by our technical center in cooperation with acknowledged experts in the field. We believe these tests and criteria are the minimum necessary for future designs to provide an adequate level of civil aviation safety.

This final rule enhances safety while at the same time considering the impact on the aviation industry. For example, we are adopting regulations that become effective for existing type designs after a phase-in period. This phase-in period gives manufacturers time to plan for changes in designs, manufacturing processes, and sources of supply. The flammability test criteria we are adopting are reasonable, as shown by research and development and the availability of materials that meet the new standards. The flammability test requirements we are adopting are flexible. Both the flame propagation test and the burnthrough test requirements allow for the development and use of approved equivalent tests.

We acknowledge that this final rule has cost implications for airplane manufacturers. There are costs associated with testing, obtaining, and installing upgraded insulation. Our analysis of the costs and benefits of this final rule shows that the benefits

(in the form of reduced property damage, injury, and loss of life) outweigh the costs. For more information on costs and benefits, see the "Economic Evaluation" section of this preamble and the Regulatory Evaluation for this final rule, which we have placed in the docket for this rulemaking. Based on our analysis of the issues involved, taking into account our responsibility for civil aviation safety, and the administrative record for this rulemaking, including the comments we received on the NPRM, this final rule is a proper and reasonable means of carrying out our responsibility to enhance civil aviation safety.

Discussion of the Final Rule

This part of the preamble describes in general terms some of the major features of the final rule. A reader who is interested in a quick overview of the final rule may find this part useful. If you are looking for a detailed description of the final rule, you should look at the section-by-section analysis, which appears later in this preamble, or the regulatory text itself, which appears at the end of this document.

This final rule requires thermal/acoustic insulation material installed in the fuselage of transport category airplanes to pass a flame propagation test. The test involves exposing samples of thermal/acoustic insulation to a radiant heat source and a propane burner flame for 15 seconds. The tested insulation must not propagate flame more than 2 inches away from the burner. The flame time after removal of the burner must not exceed 3 seconds on any specimen. See final part VI of Appendix F to Part 25 for more details.

For airplanes with a passenger capacity of 20 or greater, this final rule also requires insulation materials installed in the lower half of the airplane to pass a test of resistance to flame penetration. The test involves exposing samples of thermal/acoustic

insulation blankets mounted in a test frame to a burner for four minutes. The insulation blankets must prevent flame penetration for at least four minutes and must limit the amount of heat that passes through the blanket during the test. See final part VII of Appendix F to Part 25 for more details.

This final rule requires all transport category airplanes manufactured more than two years after the effective date of this final rule to comply with the new flame propagation test. This applies to airplanes operating under parts 91, 121, 125, and 135. This means that manufacturers have two years after the effective date of the final rule to begin installing more flame resistant insulation materials in new airplanes. This final rule requires all transport category airplanes with a passenger capacity of 20 or greater manufactured more than four years after the effective date of this final rule to comply with the new test of resistance to flame penetration. This applies to airplanes operating under part 121.

Airplanes must also comply with the new flame propagation test when thermal/acoustic insulation materials installed in the fuselage are replaced more than two years after the effective date of this final rule. This requirement applies only to the materials that are replaced.

Both-service history and laboratory testing demonstrate that the current flammability requirements applicable to thermal/acoustic insulation materials may not be providing the intended protection against the spread of fires. Additionally, we consider that increased protection against external fire penetrating the fuselage can be provided by proper selection of the same material. We consider that the new test methods described earlier will not only provide for increased in-flight fire safety, by reducing the

flammability of thermal/acoustic insulation blankets, but will also provide increased time for evacuation during externally fed, post-crash fires by increasing fuselage burnthrough resistance.

Section-by-Section Analysis

Proposed §§ 25.853(a) and 25.855(d)

Existing § 25.853(a) requires that materials in airplane compartment interiors meet the flammability test prescribed in part I of Appendix F to Part 25. Existing § 25.855(d) requires materials used in construction of cargo or baggage compartments meet the same test. In the NPRM, we proposed to add specific exceptions to these provisions for "thermal/acoustic insulation materials." The intent of this proposal was to make it clear that thermal acoustic insulation was not required to meet the requirements of Appendix F, part I, in addition to the requirements of Appendix F, parts VI and VII. However, as discussed below, this action might have confused the issue of whether or not "small parts" required testing. We have therefore decided not to adopt these proposed changes. As proposed in the NPRM, we are deleting language from part I of Appendix F to Part 25 that addresses thermal/acoustic insulation materials. This action has the same effect as the two proposed additions would have had.

Section 25.856 Thermal/acoustic insulation materials.

Final § 25.856(a) requires thermal/acoustic insulation material installed in the fuselage to meet the flame propagation test requirements of part VI of Appendix F to Part 25, or other approved equivalent test requirements. This requirement does not apply to "small parts," as defined in part I of Appendix F to Part 25.

The current flammability requirements focus almost exclusively on materials located in occupied compartments (§ 25.853) and cargo compartments (§ 25.855). The potential for an in-flight fire is not limited to those specific compartments. Thermal/acoustic insulation is installed throughout the fuselage in other areas, such as electrical/electronic compartments or surrounding air ducts, where the potential exists for materials to spread fire as well. The final rule accounts for insulation installed in areas that might not otherwise be considered within a specific compartment. Final § 25.856(a) is applicable to all transport category airplanes, regardless of size or passenger capacity, since the consequences of an in-flight fire are not related to these factors. We are developing advisory material to describe test sample configurations to address design details such as tapes and hook-and-loop fasteners.

One commenter recommended that we exclude "small parts," as defined in part I of Appendix F to Part 25, from the requirement that insulation materials pass the upgraded flame propagation test. The commenter pointed out that there is a "small parts" exception to the flammability test in part I of Appendix F to Part 25.

The FAA agrees that "small parts" would not be practical to test in the flame propagation test apparatus specified in part VI of Appendix F to Part 25. In response, we have added to final § 25.856(a) an exception for "small parts" from the requirement to pass the upgraded flame propagation test. Under paragraph I(a)(v) of Appendix F to Part 25, the FAA considers "small parts" to be things that would not contribute significantly to a fire, including knobs, handles, rollers, fasteners, clips, grommets, rub strips, pulleys, and small electrical parts. In addition, "small parts" should not be installed in proximity

to each other. As a result of this change, "small parts" will continue to be governed by existing §§ 25.853 and 25.855 and part I of Appendix F to Part 25.

One commenter suggested that, based on the language of proposed § 25.856, thermal/acoustic insulation not installed in the fuselage might also have to pass the upgraded flame propagation test.

The FAA agrees that the proposed language could allow this unintended interpretation. For this reason, we changed final § 25.856(a) to specify that thermal/acoustic insulation installed in the fuselage must meet the flame propagation test requirements.

A commenter stated that certain interior panels perform both thermal and acoustic attenuation functions to some extent and might therefore be categorized as thermal/acoustic insulation in the absence of a more precise definition.

The FAA does not intend to require interior panels to comply with final § 25.856. These panels are subject to existing heat release and smoke emissions requirements in parts IV and V of Appendix F to Part 25, which are more relevant to the role of interior panels in fire safety. This final rule is aimed at ensuring that thermal/acoustic insulation materials, which are usually installed in inaccessible areas, do not propagate fire. Their inaccessibility is what creates the hazard, especially with regard to in-flight fires. Interior panels are accessible and are clearly not exposed to the same threat. Thus, we do not apply the final rule to them.

A commenter stated that certain interior panels often receive acoustic damping treatments which, by virtue of their function, could be interpreted as requiring compliance

under the proposal. The commenter recommended that these treatments be required to comply.

The FAA agrees in part. To the extent that acoustic damping treatments applied to the inaccessible sides of interior panels could permit fire propagation, they are required to pass the flame propagation test. On the other hand, it is clear that the many possible combinations of treatments and panels could result in large amounts of testing. We intend to investigate whether compliance for such treatments can be substantiated by tests on a generic panel, or whether testing of the actual panel is necessary. Up to now, we have not evaluated acoustical damping treatments in the context of the NPRM. Based on comments, it appears that they are typically aluminum based, so the adhesive used to bond the treatment to the panel is probably the component of concern. We will evaluate any treatments provided for review to develop guidance. As proposed in the NPRM, however, this final rule requires that thermal/acoustic insulation installed in the fuselage pass the flame propagation test. This includes material installed on the pressure shell, ducts, floor panels, and within equipment bays.

Final § 25.856(b) requires, for airplanes with a passenger capacity of 20 or greater, thermal/acoustic insulation materials (including the means of fastening the materials to the fuselage) installed in the lower half of the airplane fuselage to meet the flame penetration resistance test requirements of part VII of appendix F of Part 25, or other approved equivalent test requirements.

Final § 25.856(b) applies only to airplanes with a passenger capacity of 20 or greater. This effectively excludes the smaller transport category airplanes, as well as airplanes operating in an all-cargo mode. The primary reason for this is that airplanes

with small passenger capacities are not expected to realize a significant benefit from enhanced burnthrough protection owing to their very rapid evacuation capability. That is, they have a favorable exit-to-passenger ratio. Since enhanced burnthrough protection will impose additional cost, there must be a commensurate benefit to justify the requirement. We do not consider that such benefits are substantial for airplanes with low passenger capacities. We chose the 20-passenger threshold to be consistent with other occupant safety regulations, such as those for interior materials and cabin aisle width. The enhanced burnthrough protection provided by this final rule will increase the evacuation capability of airplanes with 20 or more passengers, regardless of the exit arrangement.

Final § 25.856(b) applies to insulation materials installed in the lower half of the fuselage because that area is most susceptible to burnthrough from an external fuel fire. Flames from an external fuel fire typically impinge on the fuselage from below. Therefore, the lower half of the fuselage derives the most benefit from enhanced burnthrough protection. We chose this approach based on full-scale fire test data, as documented in the reports referenced in the NPRM, and the potential for an airplane to be off its landing gear. When the landing gear collapse, an airplane can roll significantly, and the area most susceptible to burnthrough can be correspondingly higher on the fuselage than when the airplane is on its gear. By providing burnthrough protection for the lower half of the fuselage (as opposed to just the underside), the final rule takes this situation into account.

This final rule establishes a standard for the ability of thermal/acoustic insulation to resist penetration by an external flame, rather than a standard for fuselage burnthrough *per se*. This distinction is important, since fuselage burnthrough is a complex process,

dependent on many variables. For example, the ability of the fuselage to resist penetration from an external fuel fire is directly related to the thickness and material of the skin. Skin thickness varies considerably, and essentially means that each airplane type has different burnthrough resistance. In addition, factors internal to the airplane can also affect penetration of an external fire into the occupied areas. For example, differences in the air return grills can influence the time required for an external fire to penetrate the occupied area. Therefore, establishing a minimum standard for fuselage burnthrough resistance and identifying possible means of compliance would be a highly complex undertaking.

This final rule adopts a simple standard that increases the time it takes for a fire to penetrate the airplane beyond what currently exists, regardless of the specific capability that currently exists. Since this increase in time can be achieved by addressing thermal/acoustic insulation material, and this rule revises the standard for insulation to address flame propagation anyway, it is in the public interest to incorporate criteria that enhance the overall level of safety and that can be achieved with reasonable cost. Therefore, this rule addresses two aspects of fire safety related to insulation material.

We intend this final rule to enhance the overall level of safety of the airplane when insulation that meets the upgraded flammability tests is installed. Because of the need to provide a suitable thermal and acoustical environment inside the airplane, we consider it extremely unlikely that insulation would be removed as a means to avoid having to comply with this rule. In fact, we considered requiring the removal of insulation material as an option to address flame propagation issues, but rejected it since it would effectively diminish the burnthrough capability that currently exists. Should

removal of insulation become a common practice, we will revisit the need for a specific fuselage burnthrough standard.

A commenter asserted that the NPRM was ambiguous with regard to whether materials installed in the lower half of the fuselage would have to pass the fire penetration test. The commenter assumed that only those materials installed near the exterior skin of the fuselage would have to comply. Other commenters were concerned that the proposed requirement would apply to any thermal/acoustic insulation installed in the lower half, whether or not it would play a role in burnthrough.

The FAA's intent is that final § 25.856(b) applies to all thermal/acoustic insulation installed in the lower half of the fuselage that contributes to delaying burnthrough. For example, insulation on ducts in the lower half of the fuselage does not have to comply. To clarify this point, we added to final § 25.586(b) a statement that it does not apply to thermal/acoustic insulation installations that the FAA finds would not contribute to fire penetration resistance.

One commenter recommended that the flame penetration test not be limited to airplanes with 20 or more passenger seats. The commenter cited an accident involving an airplane with fewer than 20 seats, where improved insulation might have provided a benefit.

The FAA does not agree with the commenter's assessment of the potential role of insulation materials in the cited accident. The accident involved a non-transport category airplane that does not meet the other safety requirements of part 25. Thus, considering the addition of insulation materials apart from the other requirements of part 25 is not an accurate way to assess potential benefits. As noted in the NPRM, we have assessed the

potential benefits of requiring insulation materials to pass the flame penetration test and have concluded that smaller airplanes, with their greater evacuation capability, would not realize a benefit commensurate with the costs of compliance. Readers should note, however, that this final rule does not preclude manufacturers from installing upgraded insulation materials on smaller airplanes, if they so choose.

Several commenters recommended that the requirement for flame penetration resistance be applied to insulation materials installed in the entire fuselage, not just the lower half. One commenter stated that upgraded insulation materials installed in the entire fuselage would help protect airplanes from events such as lightning strikes, which usually come from above or to the side of the airplane. These commenters noted that the NPRM stated that providing such protection would not result in great cost. Conversely, several other commenters asked that the term "lower half" be better defined, or that the requirement be changed to something related to the airplane design, such as the window line, or the main deck cabin floor.

The FAA has carefully considered whether insulation materials installed in the entire fuselage should have to pass the flame penetration test. As discussed in the preamble to the NPRM, the main issue is that the benefits of such a requirement would be negligible. While a scenario can be envisaged where materials in the upper fuselage would provide a benefit, the conditions would be extremely rare, and were not evident in the benefit study used to develop the proposal. For materials in the upper fuselage to be beneficial, the airplane would have to be rolled an extreme amount (by specifying the lower half, the requirement already accounts for significant roll), and still be intact. While this scenario may not be far-fetched, there must also be post-crash fire for there to

be any benefit from the materials. An accident that causes a combination of severe roll attitude, no fuselage rupture, but with a post-crash fire, is extremely rare if even feasible and is not considered a reasonable basis on which to base a requirement. In addition, while the NPRM characterized the increased costs as "not great," it should be noted that they are also not trivial. Any added weight would effectively be doubled, and the costs of materials would also rise. Since these costs would not be balanced by benefit, it would not be appropriate to mandate that the entire fuselage be fitted with thermal/acoustic insulation that meets the flame penetration requirement. Regarding threats from other in-flight occurrences, such as lightning, the flame propagation test required by final § 25.856(a), which is applicable to all thermal/acoustic insulation installed in the airplane, will provide added protection.

Final § 235.586(b) applies to thermal/acoustic insulation installed in the "lower half of the airplane fuselage." This phrase means the area below a horizontal line that bisects the cross section of the fuselage, as measured with the airplane in a normal attitude on the ground. We have looked at the accident history, as well as research testing, and concluded that benefits will be realized with the lower half of the fuselage protected. Using another measure, such as the window line, or the main cabin floor, would not provide the intended benefit, unless those locations were in the upper half of the fuselage. We realize that thermal/acoustic insulation installations are not typically tied to the upper or lower half of the airplane, so this requirement will probably result in either changes to insulation installation approaches, or use of the complying material over somewhat more than half of the fuselage. Since new installations of insulation materials

will likely be required for compliance anyway, this is not considered to be a significant point.

The FAA has determined that future design possibilities, such as blended wing-body configurations, would have to be addressed specifically, if the concept of the lower half is not appropriate.

As discussed above, final § 25.856(b) applies to thermal/acoustic insulation installed near the outer skin of the lower half of the airplane fuselage. The intent of the rule, however, is to provide a barrier that will delay entry of a post-crash fire into the occupied areas of the airplane. Therefore, if an airplane were to incorporate insulation not on the fuselage shell, but along the underside of the floor, this insulation would be subject to the flame penetration test of final § 25.856(b). In the case where insulation is installed in both places, an applicant may choose which insulation would be subject to the flame penetration test. This will be discussed and illustrated in more depth in a forthcoming Advisory Circular.

Both final 25.856(a) and 25.856(b) include a provision that allows a manufacturer to substitute approved equivalent methods for the tests specified in final parts VI and VII of Appendix F to Part 25. These provisions allow for the incorporation of improvements to the test methods as they are identified, without requiring specific findings of equivalent level of safety under 14 CFR 21.21. Experience has shown that such improvements frequently originate with the International Aircraft Fire Test Working Group (IAMFTWG) and are readily adopted by the industry. The IAMFTWG consists of experts in the materials and fire testing specialties who help refine and support the development of test methods used in aviation, and includes representatives from the

airlines, airframe manufacturers, material suppliers, and regulatory authorities, among others. A representative from the FAA Technical Center chairs this group. The IAMFTWG is a technical peer group that contributes to FAA research, but its activities are not regulatory in nature. Readers should note that final parts VI and VII of Appendix F to Part 25 constitute the basic requirements, and that such equivalent methods that might be developed would have to be adopted in total. It is not acceptable to selectively adopt portions of a modified test method that has been found to be equivalent and not all of the modified method. We will make the determination of an acceptable equivalent method.

In proposed § 25.856, we stated that these equivalent test methods would be "FAA-approved." One commenter suggested that, for the sake of consistency with existing regulations, including § 25.853, this simply read "approved." The FAA agrees that the suggested language is consistent with § 25.853. We believe that specifying "FAA-approved" adds no value. Therefore, we have accepted the suggestion and changed the wording of final § 25.856(a) and (b) to allow for "approved equivalent test requirements." We consider this a non-substantive, editorial change.

Two commenters, representing the major airframe manufacturers in the United States and Europe, urged that the FAA withdraw proposed part VII of appendix F to Part 25 and propose instead a general requirement for fuselage fire penetration resistance. Other commenters stated that the FAA must address areas that currently have no insulation, or areas where insulation might be removed. Some commenters stated that insulation should be required as part of this rule.

The FAA disagrees with the comments. As noted in the NPRM, we elected to propose a standard related to thermal/acoustic insulation, since this approach is known to yield improved fire penetration resistance. A requirement related to protection of the fuselage in general involves many variables and would be much more complicated to define. We recognize that removal of insulation would avoid complying with the requirement. This possibility was discussed in the preamble, and we noted our intent to monitor this possible course of action. We agree that an ideal standard would simply require that the cabin be protected from a post-crash fire of specified intensity for an additional four minutes, and permit the manufacturer to develop his own design approach. At present, we do not have a proposal or test standard to address the overall resistance of the fuselage to fire penetration.

In addition, a proposal of that nature would go beyond the scope of the NPRM, since the NPRM only addressed a material standard for thermal/acoustic insulation. Nonetheless, it appears that industry is considering alternatives that might address the issue more generally, and we do not want to dismiss this possibility. A more general requirement would also address concerns with areas that do not currently have insulation, or where insulation is removed. Nevertheless, we consider that there is a need to adopt a standard that will provide added post-crash fire protection now, and will proceed with adoption of the final rule. Based on the comments, however, we consider it appropriate to review the industry's proposal to approach burnthrough protection as an airplane performance requirement and, if such a standard can be developed, consider it as an alternative means of compliance. Therefore, we are considering assigning the Aviation Rulemaking Advisory Committee (ARAC) the task of developing a recommendation to

the FAA for a fuselage burnthrough standard. In the meantime, this regulation will be in effect, but will not actually require compliance for newly manufactured airplanes until four years after the effective date of the rule. If ARAC is successful in developing an alternative approach, we will consider whether a change to the regulations is appropriate or whether approval as an equivalent level of safety under § 21.21(b)(1) is sufficient. Regardless, under the provisions of § 21.21(b)(1), any applicant that wishes to do so can propose an alternative standard and design features meeting the objectives of the requirement at any time.

As noted in the NPRM, we have no plans to require installation of thermal/acoustic insulation in areas that currently do not have this insulation installed. Our intent is to take advantage of materials that are typically installed to affect a safety improvement, and requiring thermal/acoustic insulation to be installed in such areas would not be consistent with this intent. In fact, this approach would be more consistent with a general requirement for burnthrough protection, as discussed above. Therefore, this issue will necessarily be addressed in the proposed ARAC activity discussed above.

Part VI of Appendix F to Part 25—Flame Propagation Test

Final part VI of Appendix to Part 25 consists of a method of evaluating the flammability and flame propagation characteristics of thermal/acoustic insulation materials when exposed to both a radiant heat source and a flame. The test method we are adopting today includes specific instructions for constructing the test apparatus, calibrating instruments, and conducting the test. It also includes the standards the insulation must meet. The test involves exposing samples of thermal/acoustic insulation to a radiant heat source and a propane burner flame for 15 seconds. The tested insulation

must not propagate flame more than 2 inches away from the burner. The flame time after removal of the burner must not exceed 3 seconds on any specimen.

This test method is based on American Society of Testing and Materials (ASTM) test method E 648, which uses a modest ignition source combined with exposure to radiant heat to determine fire propagation performance. This test method represents a realistic fire threat and imposes realistic success criteria, considering the state of the art of insulation materials. The test method we are adopting today is substantially the same as the one included in the NPRM, with the exception of the burn-length and after-flame standards. We discuss the changes to the standards below in the responses to comments. We have also made minor editorial changes to the language of the test method for clarity. These editorial changes are not substantive.

One commenter questioned the rationale for applying the flame propagation test to all forms of thermal/acoustic insulation, rather than just a thin film-encapsulated batting type of thermal/acoustic insulation.

The FAA's intent is to address thermal/acoustic insulation in general because of its location and quantity in inaccessible areas of the fuselage. The flame propagation test represents a realistic in-flight fire threat, and a method of assessing the tendency for materials to spread fire. We recognize that there may be different material/installation schemes for which the flame propagation test is not well suited. However, up to now, all currently used and prospective materials that we have tested have been accommodated by the flame propagation test, with no obvious incompatibilities. If an applicant identifies an instance where this is not the case, the applicant is free to propose an alternative method

of compliance that shows equivalent level of safety. However, based on the experience gathered to date, this would not seem necessary.

Several commenters addressed specific details of the test apparatus, or the test method itself, that are intended to simplify and improve the reliability of the tests. These range from correcting conversion of measurement units to test sample size to the type of radiant panel used.

The FAA has reviewed the commenters suggested improvements and adopted several of the suggested changes as appropriate; those that are not adopted verbatim are addressed in principle. Since publication of the NPRM, the FAA Technical Center has been working to improve the test methods for determining the flammability and flame propagation characteristics of thermal/acoustic insulation materials. We have revised the test methods in Appendix VI to include these improvements. A copy of the Technical Center's report, which includes a summary of the improvements, is included in the public docket for this rulemaking.

We received several comments on proposed paragraph VI(h)(1), which would have allowed no flaming beyond two inches to the left of the centerline of the point of pilot flame application to the specimen tested. One commenter noted that the designation "to the left" was not clear, and should specify a frame of reference. Other commenters noted that the two-inch limit was not specified as an average, or a not-to-exceed value for a sample. One commenter proposed that it must be an average to be viable. This commenter noted that virtually any material will eventually exhibit a burn length greater than two inches if enough samples are tested.

The FAA does not agree that the flame propagation length should be adjusted. The intent of the proposal (and this final rule) is to require materials that will not propagate a fire. The requirement that the flame not propagate more than two inches along the sample is intended to account for the damage that occurs as a result of the pilot burner, but not to allow any additional flame propagation. We have conducted hundreds of tests since issuance of the NPRM, and determination of propagation distance has not been a problem. The requirement of this rule is not the same as the traditional Bunsen burner requirements for "burn length." For a burn-length determination, no distinction is made between burning caused by the burner itself and self-sustained combustion of the material. The Bunsen burner is oriented in the same (vertical) direction as the burn length determination, and making a distinction would be difficult at best.

For this rule, the issue is propagation of a flame beyond the damage caused by the pilot burner. The pilot burner is oriented at a right angle to the direction of measured flame propagation, making the distinction much clearer. A two-inch limit will adequately account for the damage caused by the burner, and materials that exceed this limit exhibit some tendency to propagate flame. Determination of the extent of propagation requires that a person actually watch the test, however. An after-the-fact determination is not reliable, and would probably result in failure determinations of materials that were, in fact, acceptable. Based on all of the data gathered to date, we are satisfied that the criteria are readily achievable, and that samples that exceed two inches indicate the need for corrective action. Therefore, we are adopting the burn-length standard as proposed.

We received several comments on proposed paragraph VI(h)(2), which would have allowed one of three specimens tested to have an after flame, which could not have

exceeded three seconds in duration. One commenter believed that no sample should be permitted to flame after removal of the pilot burner. Several other commenters stated that the presence of such an "after flame" is highly dependent on the ability of the person conducting the test to remove the pilot flame at precisely 15 seconds, and that slight variation can influence whether there is a short after flame. Several commenters recommended an average after flame for three samples. Some suggested a maximum total after flame time for all samples, with a maximum for any one sample. One commenter stated that an average must be allowed, since a single sample can effectively prohibit a material from use, regardless of how many other samples are tested with satisfactory results.

The FAA agrees that we should adjust the pass/fail standard. We also believe we can adjust the standard without affecting the intent of the requirement, which is to prevent insulation materials from spreading a fire. Based on the comments and a review of the test data acquired to date, we agree that materials that meet the intent of the requirement can sometimes fail the test, as proposed. (The proposed test standard would have required two of the three test samples to have no after flame whatsoever). As noted by commenters, this could be due to operator variations in detailed test procedures, material variability, or a combination of the two. While we have made every effort to remove operator variables from the test method, the stringency of the requirement tends to magnify whatever slight variations exist. Similarly, slight material variations are inevitable, even with the best materials. In light of the above, we have determined that we should adjust the pass/fail standard for after-flame time to account for slight variations. Therefore, we have revised final paragraph VI(h)(2) of appendix F to Part 25

to permit after flame on any sample, but require that none of the three samples have an after flame time of greater than three seconds. This change allows small variability in all of the samples, but retains the intent of the requirement that the material not continue to burn after the pilot flame is removed.

Several commenters addressed the fact that insulation materials frequently consist of more than a film-covered batting material. These commenters point out that tapes and hook-and-loop fastening systems are often used on insulation to perform various functions. Some commenters state that these additional features must be included in the requirement, while others only question how they would be tested if they were to be included.

Final part VI of Appendix F to Part 25 applies to the thermal/acoustic insulation assembly, which includes tapes or hook-and-loop fasteners that are affixed to the film. In addition, research testing has shown that these details can have a pronounced effect on the flame propagation characteristics of the insulation. We are developing advisory material that will explain an acceptable test sample configuration to address those details. We recognize that the use of tapes, for example, is quite variable, and it may not be possible to address each production configuration with a single test sample configuration. We hope to be able to establish a critical case that may be used to qualify other configurations, and plan to outline this approach in the advisory material.

One commenter noted that, for air ducts in particular, the test criteria do not provide sufficient detail as to how they should be tested. The commenter contends that we did not give adequate consideration to ducting when the proposal was developed, since insulation on air ducts is frequently different than that attached to the fuselage.

The FAA agrees that insulation on air ducts has not been addressed to the same extent as other insulation. However, the concerns with fire propagation are the same, and insulation on air ducts should meet the same standard, as noted in the NPRM. We are developing advisory material that will include discussion of insulation on air ducts, and the proper method of configuring test samples. This might require modification to some of the installation practices that are currently employed. For example, complete surface bonding of film to the batting material requires a large amount of adhesive, and adhesives have been shown to be problematic for flame propagation. However, other methods are available that will comply.

The commenter also noted that acoustic treatments are sometimes applied to the interior of ducts, and that this treatment should not be required to comply since it is not exposed.

The FAA agrees that this requirement would not apply to acoustic treatment completely enclosed by ducts. However, we are studying all materials in inaccessible areas, and intend to develop standards for such materials that are consistent with the threat level established to develop the flame propagation test. In that case, it is likely that the duct construction itself would be included.

Under the current requirements, parts too large to be considered "small parts" require testing, and the basic requirements for the test sample construction will be no different under this final rule. The major difference is the size of the test sample. Parts that are smaller than the test sample size could be addressed on a case-by-case basis. We have reduced the sample size from that in proposed paragraph VI(c)(2), based on data

acquired since publication. See final paragraph VI(C)(3). We encourage use of materials and constructions that meet the radiant panel test for all such parts, no matter how small.

Part VII of Appendix F to Part 25—Flame Penetration Test

Final part VII of Appendix to Part 25 consists of a method for evaluating the burnthrough resistance characteristics of aircraft thermal/acoustic insulation materials when exposed to a high-intensity open flame. The test method we are adopting today includes specific instructions for constructing the test apparatus, calibrating instruments, and conducting the test. It also includes the standards the insulation must meet. The test involves use of a kerosene burner apparatus that realistically simulates the thermal characteristics of a post-crash fire. The test stand and specimen are configured to simulate a small section of fuselage frame and stringers with insulation material mounted over them. Fuselage skin is not represented in this test since the delay in burnthrough afforded by the skin is not directly related to the performance of the insulation. The test is intended to measure the performance of the insulation installation itself. The test involves exposing samples of thermal/acoustic insulation blankets mounted in a test frame to a burner for four minutes. The insulation blankets must prevent flame penetration for at least four minutes and must limit the amount of heat that passes through the blanket during the test.

For new designs, the new burnthrough test method is applicable to the insulation as installed on the airplane. Thus, consistent with similar flammability testing of other installed materials, the means intended to be used for fastening the insulation to the fuselage must be accounted for when performing tests. For consistency, the test method imposes a standard methodology for fastening. In addition, we are developing advisory

material concerning the installation of insulation that would enable the installer to avoid a specific test on the fasteners, etc. Although failures of fasteners or seams during this test may not exacerbate flame propagation characteristics, such failures could adversely affect the burnthrough protection capability. Since research has shown practical fastening means are available for ensuring that the insulation material remains in place, we have determined that fastening means must be considered for newly manufactured airplanes.

The test method we are adopting today is substantially the same as the one included in the NPRM. We discuss changes to the test method below in the responses to comments. We have also made minor editorial changes to the language of the test method for clarity. These editorial changes are not substantive.

Some commenters asserted the test method has not been demonstrated to be repeatable.

The FAA has sponsored three round-robin test series to date and has made refinements to the test method and apparatus as a result. One significant problem with the test equipment that has been rectified is the use of various shapes and sizes of airflow vanes (stators) inside the burner draft tube. For reasons unknown, this inconsistency in fabrication developed and significantly contributed to the scatter of data obtained during inter-laboratory comparisons. Since all laboratories now have the identical stators installed, the inter-laboratory test correlation should be much better. All test results are currently displayed on the IAMFTWG web site at http://www.fire.tc.faa.gov. The repeatability of results has improved with each successive round robin, and we are satisfied that the test is sufficiently repeatable for use in the final rule.

One commenter specifically addressed the effects of altitude as not being accounted for in the test method, and proposes that this variable among test facilities must be addressed.

Regarding the potential effects due to altitude of the test facility, the FAA agrees that this is possible. In fact, the test results seen in the round robin tests discussed above strongly suggest that the effects of altitude are responsible for much of the variation. It should be noted that the fuel and airflow prescribed in this test method are meant to reflect an actual pool fire condition in which the fuel/air ratio is typically not stoichiometric. The conditions are representative of a large pool fire with respect to the two main criteria of temperature and heat flux. Therefore, the differences in combustion using the specified airflow and fuel flow values at different altitudes would also not be expected to result in a stoichiometric process. We agree that an altitude correction factor could be implemented in order to obtain more repeatable test results from labs located at various altitudes. An applicant would be free to propose an alternative method, with supporting data. If requested, we will work with an applicant to establish the proper correction.

Several commenters addressed specific details of the test method and test apparatus. One commenter stated that the calibration parameters are too narrowly specified to permit reliable calibration. The commenter proposed tolerances on the fuel flow and air intake. One commenter advised that the combined heat flux/thermocouple calibration rig is not practical and separate rigs should be used. Another commenter requested clarification of the term "assembly processes" for sample fabrication.

The FAA has considered detailed comments on the test apparatus itself, and these have been adopted for the most part. The new apparatus details are specified in final part VII of Appendix F to Part 25, and do not change the scope or intent of the test. As noted above, a significant clarification is the use of a standard stator vane assembly for the burner draft tube.

With respect to the calibration requirements, the test method prescribes the use of a highly dynamic fire source, the characteristics of which are highly transient. Testing has shown that the set-up (configuration) of the test burner plays a major role in the performance of many materials. The parameters with which to control the burner flame, (namely fuel flow rate, air intake velocity, as well as the positioning of the components necessary for firing the fuel/air mix (stators and igniter set)) must be very tightly controlled in order to minimize error between testing facilities. A tolerance of +/- 1 gallon per hour fuel flow rate is well beyond the limit that is necessary to eliminate fluctuation between testing facilities. Similarly, a tolerance of +/- 100 ft/min air velocity is excessive, and will only result in increased fluctuation of test results between testing facilities.

The accuracy of the heat flux measurement of the burner flame is highly dependent on the condition of the heat flux transducer, its position, and its accuracy. However, we agree that a minimum heat flux value (rather than a range, as proposed) is sufficient to establish whether a material performs acceptably, and have revised the test method accordingly.

The term "assembly processes" is intended to address the way in which the thermal/acoustic insulation components are built up. For example, for a traditional

batting encapsulated in a moisture barrier, there may be seams that are heat sealed, or stitched, or utilize a hook and loop type closure. These must be included in the test sample. However, features added to the surface of the thermal/acoustic insulation would not need to be included in the test sample if they do not affect the fire penetration resistance. For example, use of tapes on the moisture barrier will not require assessment in the fire penetration test. Note that these same features will require assessment in the flame propagation test of part VI of Appendix F to Part 25.

Some commenters proposed that the burnthrough time be increased to five or six minutes to provide a margin for the desired four minutes, or to account for more fire resistant materials. Other commenters questioned the heat flux value specified, and proposed that it be reduced.

The FAA does not agree that the burnthrough time should be extended to five or six minutes. In the benefit study conducted on behalf of the FAA by Cherry & Associates[1], a four-minute extension in evacuation time is shown to provide a measurable improvement in survivability. Beyond four minutes, there is little benefit. Although a product may provide more than four minutes of burnthrough protection, this does not justify a requirement if no additional benefit is provided.

Regarding comments that the time should be extended to provide a margin of safety that will ensure four minutes of protection, we agree that a certification requirement cannot assure that every material lot and batch will perform identically. However, this would be true regardless of the time specified in the regulation. We

[1] FAA Office of Aviation Research, U.S. Dept. of Transportation, Fuselage Burnthrough Protection for Increased Postcrash Occupant Survivability: Safety Benefit Analysis Based on Past Accidents, DOT/FAA/AR-99/57, Sept. 1999. Available at www.tc.faa.gov/its/worldpac/techrpt/ar99-57.pdf.

consider that the rule should not account for variation in material lot or batch. The certification requirement is intended to address the basic material and installation scheme in accordance with the type design. The manufacturer will need to develop quality control procedures to ensure consistent performance of the material.

The heat flux measurement provision is included in the pass/fail criteria to account for materials that behave similarly to a flame arrestor, and do not inhibit heat transfer. The heat flux measurement provides an indication of the hazard inside the airplane, but supplements, rather than replaces, the basic requirement to resist flame penetration. Flame penetration time is the fundamental concern. This can be described as the time at which the test burner flames directly cause a breach to form in the insulation material, thereby allowing the flames to pass through from the front to the back face. For some materials, the failure event is catastrophic and the occurrence can be measured quite accurately. However, it can be difficult to measure the event for other longer-lasting materials, as the failure does not occur instantaneously, but rather gradually over time. These materials typically allow a very small breach to occur initially, and the breach gradually increases in size as the test progresses. As a guideline, a material can be considered to fail when the size of the breach reaches 0.25 inch in diameter.

There have been instances where tested insulation materials (insulation and film) have ignited on the back face and caused surface propagation to occur. This surface propagation is not considered a burnthrough and would be acceptable, provided the heat flux level measured behind the sample does not exceed 2.0 Btu/ft^2 sec at any time during the test. However, since the same materials will also be required to meet the flame

propagation standard of part VI of Appendix F to Part 25, it is likely that a material exhibiting this type of back face ignition would be screened out by that test.

There have been other instances whereby flames can reach the back side of the insulation materials by passing through passageways created between blankets or between the sample and the test frame. This typically occurs between clamping locations, and is generally not a function of the material's flame penetration resistance, but rather a result of improper mounting. This occurrence should not be considered a failure, provided the material is not breached when inspected after the test. We will address issues related to material overlap and installation in a forthcoming Advisory Circular.

Several commenters addressed the issue of attachment of thermal/acoustic insulation to the fuselage. Some commenters noted what they consider to be a conflict between proposed § 25.856 and proposed part VII of Appendix F to Part 25, since the regulation requires that the means of attachment comply, but the appendix specifies an attachment scheme for test. Several commenters state that advisory material is needed to establish acceptable means of attachment, and stress its importance in providing burnthrough protection.

The FAA does not agree that the wording of proposed § 25.856 and part VII of Appendix F to Part 25 are in conflict. As noted in the NPRM, the test fixture is intended to test the material system in a manner that will ensure its retention since, for the sake of simplicity, the fixture does not replicate any specific airplane. In other words, the installation must meet the requirement, but, for simplicity, the test method does not include installation details. We have participated in a research program with the Civil Aviation Authority (CAA) in the United Kingdom to assess acceptable installation

methods. Acceptable methods can only be established using representative airframe structure, since the interaction between the attachment and the airframe will influence the performance of an otherwise acceptable material. In addition to the collaborative effort with the CAA, we have conducted additional full-scale fire tests to assess the sensitivity of burnthrough performance to minor installation variations. As a result of this research, we are developing an advisory circular that describes acceptable methods of installation. The advisory circular addresses attachment schemes, overlap between the insulation and airframe structure and overlap of more than one insulation blanket. We recognize that other methods of installation may be equally acceptable, or necessary, particularly with insulation systems that are different from those described in the AC. However, an applicant would need to demonstrate that alternative approaches provide an equivalent level of safety. Such demonstrations would require testing of a scale appropriate to the feature being investigated.

One commenter disagrees with discussing detailed installation methods in an advisory circular. The commenter states that installation methods should be part of the rule, and not separated into an AC.

The FAA does not agree. The installation methods are, in fact, part of the regulation. However, in order to address the installation methods in the certification test method, the test fixture would have to be modified for each installation, which is impractical and could lead to a lack of standardization. In addition, it is doubtful that the scale of the oil burner test could adequately assess certain installation issues that would be significant in a post crash fire. For these reasons, we have elected to simplify the test method, and provide guidance on acceptable installation methods. An applicant is free to

propose testing that would substantiate the actual installation, but we do not intend to require this when the advisory material covers the installation methodology.

One commenter states that the test method does not adequately address "non-conforming" materials, such as rigid foams, and could result in the placement of a fire barrier that is closer to the calorimeter than is the case for traditional blanket materials. The commenter contends that the relationship of the barrier to the calorimeter can affect the test results.

The FAA agrees that the relative position of the fire barrier and the calorimeter can influence the test results. However, we do not agree that moving the barrier closer to the calorimeter will always have negative effects. The relationship of the burner to the calorimeter is constant, so the relative performance of the barrier material, whatever it is, is based on the effect of the burner at the calorimeter location. To vary this relationship would compromise the standardization of the test method. We recognize that the test method is only representative of, and not identical to, the actual fire threat. Therefore, an applicant would be free to demonstrate that a particular design approach provides the same level of safety if the applicant believes that the test setup does not adequately evaluate the design.

Operating Requirements in Parts 91, 121, 125, and 135

Newly Manufactured Airplanes

This final rule requires transport category airplanes operating under parts 91, 121, 125, and 135 to comply with the new standards relative to flame propagation in final § 25.856(a). This portion of the final rule applies to airplanes manufactured more than two years after the effective date of this final rule. These requirements are found in final

§§ 91.613(b)(2), 121.312(e)(2), 125.113(c)(2), and 135.170(c)(2). We are adopting these requirements exactly as proposed in the NPRM except for adding the words "in the fuselage" to make clear that only thermal/acoustic insulation materials installed in the fuselage are subject to the requirements.

Since there are materials currently available that will meet the new standards, these requirements impose minimal additional costs. These requirements are applicable to airplanes manufactured more than two years after the effective date of the final rule. Two years is considered sufficient time to allow for material production capacity to be developed and for disposition of existing inventory.

Readers should note that these requirements differ from previous rulemaking related to flammability of materials in that the applicability to newly manufactured airplanes is not limited to operations under part 121. The reasons for this are that the rule adds minimal cost and the potential for an in-flight fire is not limited to air carrier operations.

In accordance with § 21.17, these new standards are applicable to new type certificates for which application is made after the effective date of the final rule. In addition to changing the design standards for future type certificate applications, we consider that the benefits from improved flammability standards can be realized for existing designs as well. The technology exists today so that these benefits can be obtained in a cost-effective manner by applying the standards under some circumstances to newly manufactured airplanes and to existing airplanes when insulating materials are replaced. Our means for obtaining benefits earlier than would be provided by changing design standards is to revise the operating rules. Requirements for newly manufactured

airplanes become a basic airworthiness requirement for those airplanes and apply throughout their service life. Requirements for the existing fleet relate to materials that are replaced in service. This latter aspect of the rule does not affect newly manufactured airplanes, since they are already required to comply by virtue of their date of manufacture.

Replacement of Existing Insulation

This final rule requires that thermal/acoustic insulation materials, when installed as replacements more than two years after the effective date of this final rule, meet the new flame propagation test requirements of final § 25.856(a). This requirement applies to existing transport category airplanes operating under parts 91, 121, 125, and 135 and to the same types of airplanes manufactured within two years of the effective date of this final rule. See final §§ 91.613(b)(1), 121.312(e)(1), 125.113(c)(1), and 135.170(c)(1). We are adopting these requirements exactly as proposed in the NPRM except for adding the words "in the fuselage" to make clear that only thermal/acoustic insulation materials installed in the fuselage are subject to the requirements.

This action provides for the gradual attrition of materials installed under earlier standards. Since there are existing materials that meet the new standards, and since those materials cost and weigh only marginally more than other materials, this should result in negligible additional cost to operators.

As with newly manufactured airplanes, it is appropriate to address not only those airplanes operated in part 121 air carrier service, but other operations as well, since the flame propagation portion of this final rule enhances safety over the current regulatory requirements, and can be done inexpensively

Although it is difficult to quantify the benefits of piecemeal replacement of materials, the cost of replacement is low and adds minimal burden. This final rule allows time for attrition of current inventories and acquisition of new materials. Replacement insulation does not have to comply until two years after the effective date of this final rule. We expect this requirement to have little impact since only a relatively small amount of insulation materials are replaced every year.

Larger Airplanes Operating under Part 121

This final rule requires newly manufactured airplanes with a passenger capacity of 20 or greater operating under part 121 to comply with the burnthrough protection standards in final § 25.856(b). See final § 121.312(e)(3). This requirement applies to airplanes manufactured more than four years after the effective date of the final rule. Although there are materials currently available that will meet the standards, these materials are not widely used. Therefore, we expect the burnthrough portion of the rule to require both material and, in many cases, design changes. As discussed in the context of the part 25 changes, these design changes relate primarily to the means of fastening the insulation to the fuselage structure. For those airplanes that require design changes, we recognize that adequate time is necessary to perform the necessary engineering and to obtain approval for the changes. We consider four years to be a reasonable time to implement any design changes and configuration control measures required to account for the new standard and to allow for material availability.

Generally, airplanes operated under parts 91, 125, and 135 carry fewer passengers than airplanes operating under part 121 and can, as a result, be evacuated more quickly. Therefore, we consider that the additional evacuation time provided by enhanced fuselage

burnthrough protection would not provide the same increase in safety for these airplanes. In light of the costs associated with requiring compliance with the burnthrough standard, imposing the requirement would have a negligible benefit. This conclusion is similar to the conclusion, discussed in the context of the proposed part 25 burnthrough standard, not to impose the new standard for airplanes with fewer than 20 passengers. However, since transport category airplanes can be operated under different regulatory requirements throughout their service life, it is likely that most, if not all, affected newly manufactured transport category airplanes will comply, to account for potential future part 121 operations.

Replacement

This final rule does not require installation of materials complying with the burnthrough test standards in all transport category airplanes because it would not provide a substantial benefit. If the fuselage is subjected to an external fire, it is unlikely that insulation complying with this standard that has been installed in a portion of the fuselage would significantly delay burnthrough if the rest of the fuselage contains insulation that does not comply with the new standard. As discussed previously, in order to be effective against burnthrough, new insulation materials would also have to be installed in a manner that would allow them to remain in place when exposed to an external fire. Requiring that the means of fastening, and the associated engineering necessary to incorporate design changes, be accounted for on a material replacement basis would be very expensive, with negligible benefit.

Date of Manufacture

For the purposes of this final rule, we consider the date of manufacture to be the date on which inspection records show that an airplane is in a condition for safe flight. This is not necessarily the date on which the airplane is in conformity with the approved type design, or the date on which a certificate of airworthiness is issued, since some items not relevant to safe flight, such as passenger seats, may not be installed at that time. It could be earlier, but would be no later, than the date on which the first flight of the airplane occurs. This definition has been used in previous rulemaking, including the preamble to our February 2, 1995, final rule entitled Improved Flammability Standards for Materials Used in the Interiors of Transport Category Airplane Cabins (60 FR 6616, 6617).

Compliance Time

Commenters were divided as to whether more or less time should be allowed for compliance by newly manufactured airplanes with the flame propagation requirement of final § 25.856(a). No commenter provided any data to support this position, although one commenter noted that it might be required to make part number changes in order to facilitate a material changeover, which will take time. Another commenter noted that a longer compliance period for retrofit of non-compliant insulation on air ducts on a particular airplane type was permitted in accordance with an airworthiness directive, and this seems inconsistent with the proposal.

With respect to comments that the compliance period for newly manufactured airplanes should be adjusted either up or down, in the absence of any data to support either position, the FAA cannot justify a change. While we agree that part number changes might be necessary, it is not the only method to assure configuration control.

Any other method in which configuration control is assured would be acceptable. Therefore, a change to the compliance time is not justified on this basis.

Finally, the comment that the proposed compliance time does not coincide with a similar airworthiness directive is not relevant to this rule. The airworthiness directive requires retrofit of airplanes that are already in service. This is a much more labor intensive and complicated process than incorporating a different material in production. Therefore no change is made to the compliance time for flame propagation.

Paperwork Reduction Act

In accordance with the Paperwork Reduction Act of 1995 (44 U.S.C 3507(d)), we have determined that there are no requirements for information collection associated with this final rule.

International Compatibility

In keeping with U.S. obligations under the Convention on International Civil Aviation, it is FAA policy to comply with International Civil Aviation Organization (ICAO) Standards and Recommended Practices to the maximum extent practicable. We have determined that there are no ICAO Standards and Recommended Practices that correspond to these regulations.

Economic Evaluation, Regulatory Flexibility Determination, Trade Impact Assessment, and Unfunded Mandates Assessment

Changes to Federal regulations must undergo several economic analyses. First, Executive Order 12866 directs each Federal agency proposing or adopting a regulation to first make a reasoned determination that the benefits of the intended regulation justify its costs. Second, the Regulatory Flexibility Act of 1980 requires agencies to analyze the

economic impact of regulatory changes on small entities. Third, the Trade Agreements Act prohibits agencies from setting standards that create unnecessary obstacles to the foreign commerce of the United States. In developing U.S. standards, this act requires agencies to consider international standards, and use them where appropriate as the basis of U.S. standards. Fourth, the Unfunded Mandates Reform Act of 1995 requires agencies to prepare a written assessment of the costs and benefits and other effects of proposed and final rules. An assessment must be prepared only for rules that impose a Federal mandate on State, local, or tribal governments, or on the private sector, likely to result in a total expenditure of $100 million or more in any one year (adjusted for inflation).

In conducting these analyses, the FAA has determined that this rule has benefits that justify its costs. This rulemaking does not impose costs sufficient to be considered "significant" under the economic standards for significance under Executive Order 12866. Due to public interest, however, it is considered significant under the Executive Order and DOT policy. This rule will not have a significant impact on a substantial number of small entities. This rule has no affect on trade-sensitive activity. This rule does not impose an unfunded mandate on state, local, or tribal governments, or on the private sector. The FAA has placed these analyses in the docket and summarized them below.

Benefits and Costs

Benefits

This rule will generate safety benefits by averting accidents that involve propagation of flame on the film bags that encase thermal acoustic insulation batting, and by mitigating accidents that involve fire burning through from outside an airplane into its

cabin. Over a 20-year analysis period the rule is expected to avert one catastrophic accident and a recoverable accident. The estimated present value of the combined flame propagation and burnthrough benefits is about $222.6 million in constant 2001 dollars.

Flame Propagation Benefits

When an in-flight fire that propagates on insulation in an inaccessible area is detected soon enough, diversion of the flight is likely, thus averting death, injury, and damage to the airplane. However, if such a fire is not detected until it grows beyond the capacity of the aircrew to control, a catastrophic accident with 100 percent fatalities and the complete loss of the airplane can result. The estimate of the expected benefits of complying with the flame propagation requirements is based on averting such a catastrophic accident. The components of this estimate include (1) averting the deaths; (2) averting the loss of the airplane; and (3) averting the costs of investigating the accident.

An example of a potential future averted accident (basis accident) is the catastrophic accident that occurred on September 2, 1998, when Swissair Flight 111 crashed off the coast of Nova Scotia, Canada, with the loss of 229 lives. Although the Transportation Safety Board of Canada has not released its final investigative report, on August 28, 2001, that agency issued *Aviation Safety Recommendations*, stating that

> "...The most significant material flammability deficiency discovered has been the inappropriate flammability characteristics of the MPET-covered thermal acoustic insulation blankets..."

In September 2001, the Fire Safety Section of the FAA's William J. Hughes Technical Center provided its professional engineering opinion that

"...this rule change will likely prevent one catastrophic in-flight accident over a twenty-year period after implementation."

The Section supports its judgment as follows:

"During the study period from 1967 through 1998 three fatal in-flight fires occurred on 121 carriers in North America and an additional six throughout the rest of the world in which the fire was in an inaccessible area and the thermal/acoustic film may have played an important role. A review of recent incident, accident, and service difficulty reports indicates that there are between three and five in-flight fires causing serious damage on part 121 aircraft in the U.S. per year. Most of those occurrences included the spread of fire on the thermal/acoustic film. Preliminary information obtained on one accident (Air Tran Airways, DC-9-32 on November 29, 2000, at Atlanta, Georgia) indicates that had the fire started a little later in the flight the aircraft would not have been able to make it back to the airport.

Given the above, it is estimated that one catastrophic in-flight fire accident will occur every ten years in the U.S. Thermal acoustic insulation film makes up a large percentage of the surface area in the inaccessible areas of airplanes. If this rule change were fully implemented, it would eliminate 50% of the annual 3 to 5 in-flight fires, thus halving the likelihood of a catastrophic accident to one in every 20 years." (emphasis added)

The expected present-value benefits from averting a catastrophic accident are estimated to include: averting fatalities ($110 million); averting the loss of an airplane hull ($16 million); and averting the costs of an accident investigation ($1 million). These benefits total to $127 million.

Burnthrough Benefits

The estimated burnthrough benefits of this rule are based the September 1999 report "Fuselage Burnthrough Protection for Increased Postcrash Occupant Survivability: Safety Benefit Analysis Based on Past Accidents," DOT/FAA/AR-99/57 (www.tc.faa.gov/its/act141/reportpage.html), hereafter referred to as the Cherry Study. This study concludes that four minutes of additional resistance to burnthrough will result

in averting 10.1 fatalities and 13.5 injuries per year over the worldwide fleet of passenger-carrying airplanes. The FAA adjusted these fatalities and injuries so as to apply only to part 25 airplanes in part 121 service over the forecast period. The present value total benefit of $95 million includes $50 million from averted fatalities, $34 million from averted injuries, and $11 million from averted accident investigations

Benefit Summary

Thus, over the 20-year period of analysis examined in this evaluation, the estimated total present value of flame propagation and burnthrough benefits is $222.6 million.

Summary of Benefits

	Monetary Benefits Derived By Averting Deaths	Monetary Benefits Derived By Averting Loss Of Aircraft Or Injuries	Monetary Benefits Derived By Averting Accident Investigations	Total Monetary Benefits
Flame Propagation	$ 110.3	$ loss of aircraft 15.6	$ 1.4	$ 127.3
Burnthrough	$ 50.5	$ Injuries 33.9	$ 10.8	$ * 95.3
Total	$ 160.8	$ 49.5	$ 12.2	**$ * 222.6**

***Rounded**

Estimates of Costs

This evaluation examines four components of cost: (1) the acquisition of test apparatus used to establish the new testing standards; (2) the installation and the maintenance of insulating material to meet the flame propagation requirement; (3) the installation of insulating material to meet the burnthrough requirement; and (4) engineering costs, including those of configuration management, which includes changing (also called "rolling") parts numbers.

Final rule evaluation estimates differ from those of the NPRM evaluation with respect to cost components (1), (2) and (4), as follow:

- the cost of test apparatus was excluded
- costs of material to be installed and replaced for the flame propagation requirement were added
- the cost of a fuel-weight penalty for burnthrough compliance was added
- the engineering cost of possible changes in design and installation of insulation blankets was eliminated
- costs of the engineering work of configuration management were greatly increased.

Each of the four components of the cost estimate is considered in turn below.

The cost of test apparatus was excluded because this cost of compliant insulation is expected to include the cost of test apparatus. To include the cost of test apparatus will result in counting the cost of test apparatus twice.

This final rule evaluation found that flame propagation material requirements is expected to add cost and weight that was not considered in the NPRM evaluation. While neither installation during manufacture nor replacement during maintenance is expected to add to labor costs, each will add to cost of material and to weight. The incremental cost of the insulation is $2.05 per square yard. The additional weight will result in additional fuel cost.

Unlike the NPRM this final rule evaluation assigns a minimal cost to the design and installation expense. This change in approach results from FAA technical opinions that became available after the completion of the NPRM evaluation. FAA technical opinions state that the common method of installation shown **will** meet burnthrough

requirements **if** a layer of ceramic paper is laminated inside the outboard layer (the layer next to the aluminum skin of the airplane) of the metalized polyvinylfloride film. As the method of installation will not change, there will be no additional engineering expense for design and installation.

While one commenter stated that the FAA's NPRM estimate of engineering costs was greatly overstated, this final rule evaluation finds that the NPRM estimate of the costs of the engineering work of configuration management costs was low. Considering other comments and clarifications about the formalization, technical and regulatory requirements, and organizational complexity involved in managing aviation parts nomenclature, the FAA revised its NPRM cost estimate upward.

The agency accepts the industry estimate that as much as eight hours can be required to fully effect changes in nomenclature for each aviation part involved in compliance. These eight hours make up the time needed for work that begins with the initiation of a change in (or with the introduction of new) nomenclature, and that ends with the completion of the authorized and documented release of that nomenclature to all appropriate holders.

Summary of Cost

Flame propagation present-value compliance costs are estimated to be approximately $76.2 million. The burnthrough present-value compliance costs are expected to be approximately $32.2 million. Thus the total cost for this rule is $108.4 million (total does not add due to rounding). The specific cost elements for flame propagation and burnthough are present in the Summary of Costs table.

Summary of Costs					
	New Installation Material Cost	Maintenance Driven Replacement Cost	Added Fuel Weight Cost	Engineering Costs	Total Costs
Flame Propagation	$ 13.8	$ 2.8	$ 1.5	$ 58.1	$ 76.2
Burnthrough	$ 20.6		$ 2.0	$ 9.6	$ 32.2
Total					**$ 108.4**

Comparison of Benefits and Costs

When discounted at 7 per cent annually, the present value of the overall benefits of this final rule is about $222.6 million in constant 2001 dollars. Estimated overall costs are about $108.4 million in 2001 dollars. Thus, taken as a whole, the rule is cost effective. The discounted present values of the benefits of the flame propagation requirements are about $127.3 million, and comparable costs are about $76.2 million. The discounted present values of benefits of the burnthrough requirements are about $95.3 million, and comparable costs are about $32.2 million. Thus, each part of the rule, considered separately, is cost effective.

Regulatory Flexibility Determination

The Regulatory Flexibility Act of 1980 (RFA) establishes "as a principle of regulatory issuance that agencies shall endeavor, consistent with the objective of the rule and of applicable statutes, to fit regulatory and informational requirements to the scale of the business, organizations, and governmental jurisdictions subject to regulation." To achieve that principle, the Act requires agencies to solicit and consider flexible regulatory

proposals and to explain the rationale for their actions. The Act covers a wide-range of small entities, including small businesses, not-for-profit organizations and small governmental jurisdictions.

Agencies must perform a review to determine whether a proposed or final rule will have a significant economic impact on a substantial number of small entities. If the determination is that it will, the agency must prepare a regulatory flexibility analysis as described in the Act.

However, if an agency determines that a proposed or final rule is not expected to have a significant economic impact on a substantial number of small entities, section 605(b) of the 1980 act provides that the head of the agency may so certify and an regulatory flexibility analysis is not required. The certification must include a statement providing the factual basis for this determination, and the reasoning should be clear.

The FAA conducted the required review of this final rule, and finds the following:

(1) Engineering and manufacturing costs of this rule apply to manufacturers of part 25 airplanes. No such manufacturer is a small business;

(2) In December 2000, the FAA identified 28 airlines that were small businesses. This evaluation assumes each will replace about 2.8% of the insulation in each of its airplanes with rule compliant insulation yearly, on a maintenance-driven basis. Fleet sizes of those 27 carriers still in business range from 2 to 24. The FAA believes the average annual cost of compliance for these carriers will approximate $60 per airplane. Based on fleet size, the annual costs incurred by average small business carrier will estimated $420. This amount is less than an hour of annual operating cost for the airplanes affected by this rule;

(3) Because the FAA believes that manufacturers will pass along their increased compliance costs to the airlines the agency reviewed the scope and significance of these costs to operators. The discounted present (2001) value of the average airplane newly delivered in 2006 (the first year both flame propagation and burnthrough requirements will be implemented) is about $34.8 million in constant 2001 dollars. Assuming the manufacturer spreads engineering costs (for each requirement) over a 10-year production run, about $12,000 will be added to the cost of the average airplane. Material costs for both requirements will add another $11,000. Thus, about $23,000, or just under seven one-hundredths of one percent is added to the cost of the average airplane that might be acquired by the average small business airline. The FAA believes a small business airline that will acquire, or will secure the use of a $34.8 million capital asset will not be burdened by this small increment.

Accordingly, pursuant to the Regulatory Flexibility Act, 5 U.S.C. 605(b), the Federal Aviation Administration certifies that this rule will not have a significant economic impact on a substantial number of small entities.

International Trade Impact Assessment

The Trade Agreement Act of 1979 prohibits Federal agencies from engaging in any standards or related activities that create unnecessary obstacles to the foreign commerce of the United States. Legitimate domestic objectives, such as safety, are not considered unnecessary obstacles. The statute also requires consideration of international standards and where appropriate, that they be the basis for U.S. standards.

In accordance with the above statute, the FAA has assessed the potential effect of this final rule and has determined that it will impose the same costs on domestic and international manufacturing entities, and will impose minimal operating costs on domestic operators. The agency believes this final rule will approximate a neutral impact on trade.

Unfunded Mandates Reform Act

Title II of the Unfunded Mandates Reform Act of 1995 (the Act), enacted as Pub. L. 104-4 on March 22, 1995, requires each Federal agency, to the extent permitted by law, to prepare a written assessment of the effects of any Federal mandate in a proposed or final agency rule that may result in the expenditure by State, local, and tribal governments, in the aggregate, or by the private sector, of $100 million or more (adjusted annually for inflation) in any one year. Section 204(a) of the Act, 2 U.S.C. 1534(a), requires the Federal agency to develop an effective process to permit timely input by elected officers (or their designees) of State, local, and tribal governments on a proposed "significant intergovernmental mandate."

A "significant intergovernmental mandate" under the Act is any provision in a Federal agency regulation that would impose an enforceable duty upon State, local, and tribal governments, in the aggregate, of $100 million (adjusted annually for inflation) in any one year. Section 203 of the Act, 2 U.S.C. 1533, which supplements section 204(a), provides that before establishing any regulatory requirements that might significantly or uniquely affect small governments, the agency shall have developed a plan that, among other things, provides for notice to potentially affected small governments, if any, and for

a meaningful and timely opportunity to provide input in the development of regulatory proposals.

This rule does not contain any significant Federal intergovernmental or private sector mandate. Therefore, the analytical requirements of Title II of the Unfunded Mandates Reform Act of 1995 do not apply.

In estimating the costs associated with this final rule, we refined the analysis that we prepared for the September 20, 2000 NPRM. See 65 FR 56998. At that time, we estimated the total discounted costs of the NPRM to be $68.2 million. As stated above, we estimate the total discounted cost of the final rule to be $108.4 million. The primary reason for the increase in the cost estimate is that we believe that the NPRM cost estimate of configuration management was too low. Based on comments we received on the NPRM about the complexity of managing aviation parts nomenclature, we revised the cost estimate upward.

Several commenters on our estimates of the costs of the proposed rule address our use of a particular commercial product in the cost and benefit assessment. Some commenters note that the material discussed is actually a family of materials, rather than a single product, and it could be misleading to imply that only one material is being considered. Other commenters object to the use of any trade name, and state that this implies that the FAA is endorsing a particular product.

As discussed in the NPRM, the FAA specifically requested information on materials that manufacturers would use to comply with the requirement. This was because we could not obtain definitive information on the optimal means of compliance, and were forced to rely on information available to make an assessment of the costs of

compliance. In so doing, we used as an example a product where the performance and cost information could be readily obtained. This is not a product endorsement, or even a suggestion of a preferred means of compliance. It is merely an example that could be quantified to illustrate what the cost of compliance could be. In order for this information to be of any value, the particular product has to be mentioned. Otherwise, there would be no way for the public to comment on the validity of our estimates.

Executive Order 13132, Federalism

The FAA has analyzed this final rule under the principles and criteria of Executive Order 13132, Federalism. We have determined that this action will not have a substantial direct effect on the States, on the relationship between the national Government and the States, or on the distribution of power and responsibilities among the various levels of government. Therefore, we determined that this final rule does not have federalism implications.

Environmental Analysis

FAA Order 1050.1D defines FAA actions that may be categorically excluded from preparation of a National Environmental Policy Act (NEPA) environmental impact statement. In accordance with FAA Order 1050.1D, appendix 4, paragraph 4(j), this rulemaking action qualifies for a categorical exclusion.

Energy Impact

The energy impact of this final rule has been assessed in accordance with the Energy Policy and Conservation Act (EPCA) and Public Law 94-163, as amended (42 U.S.C. 6362) and FAA Order 1053.1. It has been determined that the final rule is not a major regulatory action under the provisions of the EPCA.

Regulations Affecting Intrastate Aviation in Alaska

Section 1205 of the FAA Reauthorization Act of 1996 (110 Stat. 3213) requires the Administrator, when modifying regulations in Title 14 of the CFR in a manner affecting intrastate aviation in Alaska, to consider the extent to which Alaska is not served by transportation modes other than aviation, and to establish such regulatory distinctions as he or she considers appropriate. Because this final rule applies to the certification of future designs of transport category airplanes and their subsequent operation, it could affect intrastate aviation in Alaska. Because no comments were received regarding this regulation affecting intrastate aviation in Alaska, we will apply the rule in the same way that it is being applied nationally.

List of Subjects

14 CFR part 25

Aircraft, Aviation safety, Reporting and recordkeeping requirements

14 CFR part 91

Aircraft, Aviation safety, Reporting and recordkeeping requirements

14 CFR part 121

Aircraft, Aviation safety, Reporting and recordkeeping requirements, Safety, Transportation

14 CFR part 125

Aircraft, Aviation safety, Reporting and recordkeeping requirements

14 CFR part 135

Aircraft, Aviation safety, Reporting and recordkeeping requirements

The Amendment

In consideration of the foregoing, the Federal Aviation Administration amends parts 25, 91, 121, 125, and 135 of Title 14, Code of Federal Regulations as follows:

PART 25--AIRWORTHINESS STANDARDS: TRANSPORT CATEGORY AIRPLANES

1. The authority citation for part 25 continues to read as follows:

Authority: 49 U.S.C. 106(g), 40113, 44701-44702, and 44704.

2. Add § 25.856 to read as follows:

§ 25.856 Thermal/Acoustic insulation materials.

(a) Thermal/acoustic insulation material installed in the fuselage must meet the flame propagation test requirements of part VI of Appendix F to this part, or other approved equivalent test requirements. This requirement does not apply to "small parts," as defined in part I of Appendix F of this part.

(b) For airplanes with a passenger capacity of 20 or greater, thermal/acoustic insulation materials (including the means of fastening the materials to the fuselage) installed in the lower half of the airplane fuselage must meet the flame penetration resistance test requirements of part VII of Appendix F to this part, or other approved equivalent test requirements. This requirement does not apply to thermal/acoustic insulation installations that the FAA finds would not contribute to fire penetration resistance.

3. Amend appendix F to part 25 as follows:

a. In part I, paragraph (a)(1)(ii), by removing the words "thermal and acoustical insulation and insulation covering" and "insulation blankets" from the first sentence.

b. In part I, by removing and reserving paragraph (a)(2)(i).

c. By adding parts VI and VII to read as follows:

Appendix F TO PART 25 [Amended]

* * * * *

Part VI-Test Method to Determine the Flammability and Flame Propagation Characteristics of Thermal/Acoustic Insulation Materials

Use this test method to evaluate the flammability and flame propagation characteristics of thermal/acoustic insulation when exposed to both a radiant heat source and a flame.

(a) Definitions.

"Flame propagation" means the furthest distance of the propagation of visible flame towards the far end of the test specimen, measured from the midpoint of the ignition source flame. Measure this distance after initially applying the ignition source and before all flame on the test specimen is extinguished. The measurement is not a determination of burn length made after the test.

"Radiant heat source" means an electric or air propane panel.

"Thermal/acoustic insulation" means a material or system of materials used to provide thermal and/or acoustic protection. Examples include fiberglass or other batting material encapsulated by a film covering and foams.

"Zero point" means the point of application of the pilot burner to the test specimen.

(b) Test apparatus.

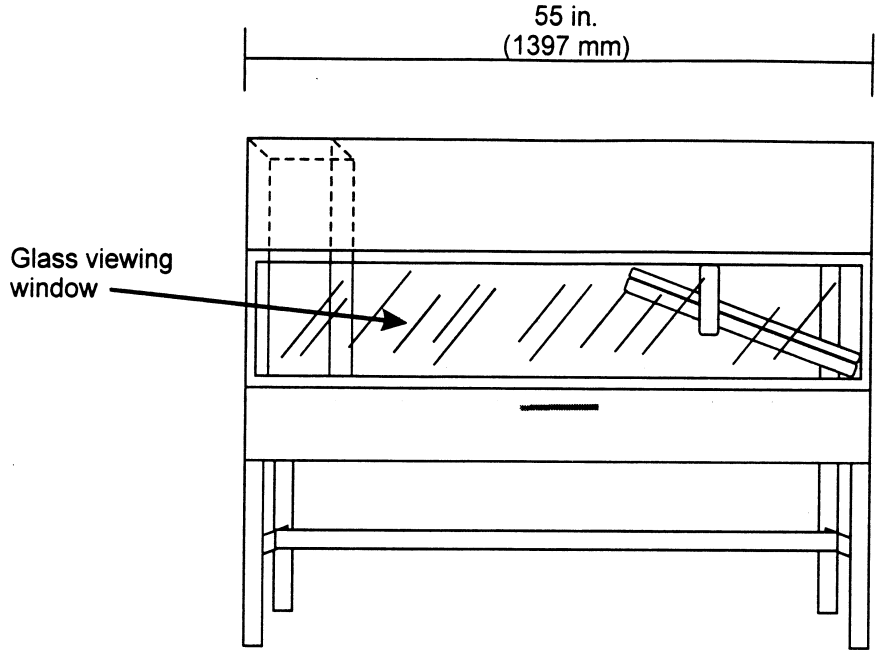

Figure 1 - Radiant Panel Test Chamber

(1) Radiant panel test chamber. Conduct tests in a radiant panel test chamber (see figure 1 above). Place the test chamber under an exhaust hood to facilitate clearing the chamber of smoke after each test. The radiant panel test chamber must be an enclosure 55 inches (1397 mm) long by 19.5 (495 mm) deep by 28 (710 mm) to 30 inches (maximum) (762 mm) above the test specimen. Insulate the sides, ends, and top with a fibrous ceramic insulation, such as Kaowool M™ board. On the front side, provide a 52 by 12-inch (1321 by 305 mm) draft-free, high-temperature, glass window for viewing the sample during testing. Place a door below the window to provide access to the movable specimen platform holder. The bottom of the test chamber must be a sliding steel platform that has provision for securing the test specimen holder in a fixed and level position. The chamber must have an internal chimney with exterior dimensions of 5.1 inches (129 mm) wide, by 16.2 inches (411 mm) deep by 13 inches (330 mm) high at the opposite end of the chamber from the radiant energy source. The interior dimensions

must be 4.5 inches (114 mm) wide by 15.6 inches (395 mm) deep. The chimney must extend to the top of the chamber (see figure 2).

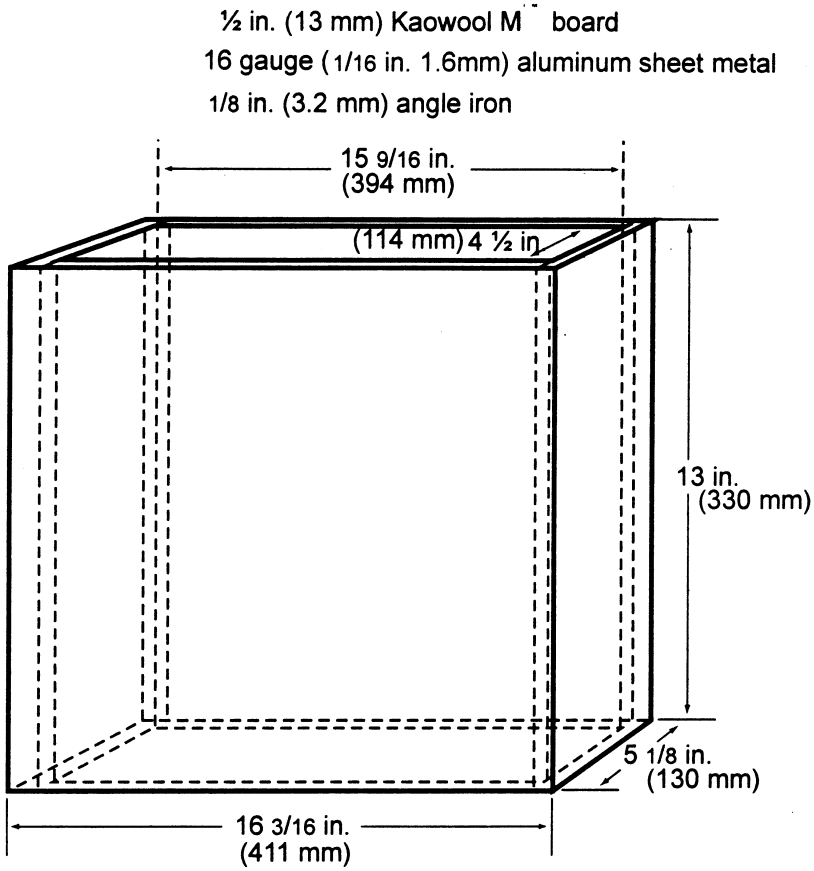

Figure 2 - Internal Chimney

(2) Radiant heat source. Mount the radiant heat energy source in a cast iron frame or equivalent. An electric panel must have six, 3-inch wide emitter strips. The emitter strips must be perpendicular to the length of the panel. The panel must have a radiation surface of 12 7/8 by 18 ½ inches (327 by 470 mm). The panel must be capable of operating at temperatures up to 1300°F (704°C). An air propane panel must be made of a porous refractory material and have a radiation surface of 12 by 18 inches (305 by

457 mm). The panel must be capable of operating at temperatures up to 1,500°F (816°C). See figures 3a and 3b.

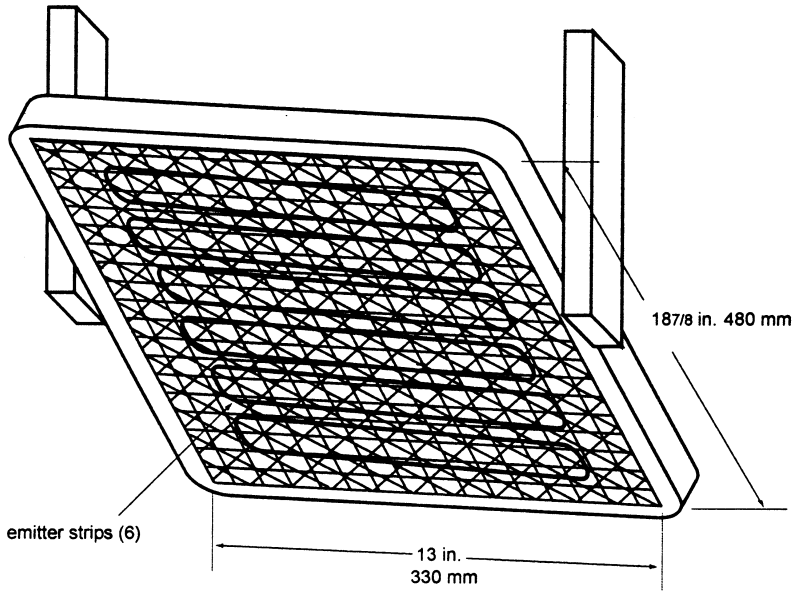

Figure 3a – Electric Panel

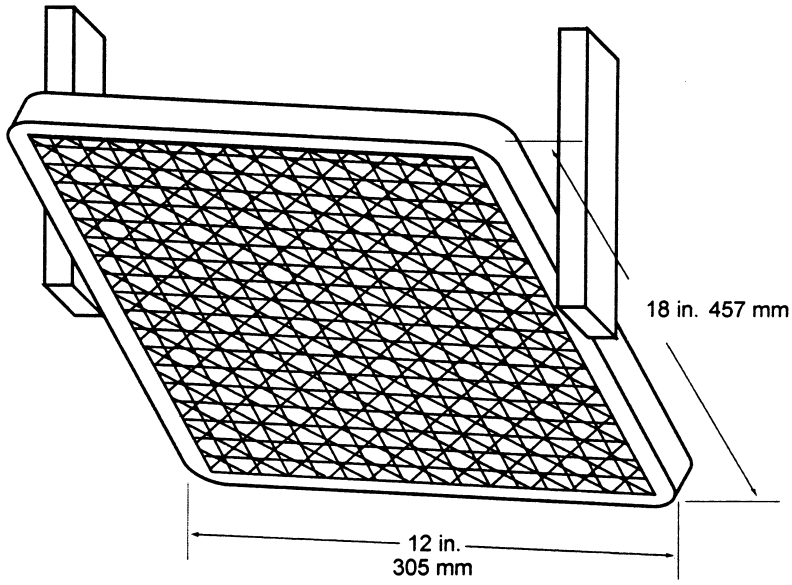

Figure 3b – Air-Propane Radiant Panel

(i) Electric radiant panel. The radiant panel must be 3-phase and operate at 208 volts. A single-phase, 240 volt panel is also acceptable. Use a solid-state power controller and microprocessor-based controller to set the electric panel operating parameters.

(ii) Gas radiant panel. Use propane (liquid petroleum gas – 2.1 UN 1075) for the radiant panel fuel. The panel fuel system must consist of a venturi-type aspirator for mixing gas and air at approximately atmospheric pressure. Provide suitable instrumentation for monitoring and controlling the flow of fuel and air to the panel. Include an air flow gauge, an air flow regulator, and a gas pressure gauge.

(iii) Radiant panel placement. Mount the panel in the chamber at 30° to the horizontal specimen plane, and 7 ½ inches above the zero point of the specimen.

(3) Specimen holding system.

(i) The sliding platform serves as the housing for test specimen placement. Brackets may be attached (via wing nuts) to the top lip of the platform in order to accommodate various thicknesses of test specimens. Place the test specimens on a sheet of Kaowool M™ board or 1260 Standard Board (manufactured by Thermal Ceramics and available in Europe), or equivalent, either resting on the bottom lip of the sliding platform or on the base of the brackets. It may be necessary to use multiple sheets of material based on the thickness of the test specimen (to meet the sample height requirement). Typically, these non-combustible sheets of material are available in ¼ inch (6 mm) thicknesses. See figure 4. A sliding platform that is deeper than the 2-inch (50.8mm) platform shown in figure 4 is also acceptable as long as the sample height requirement is met.

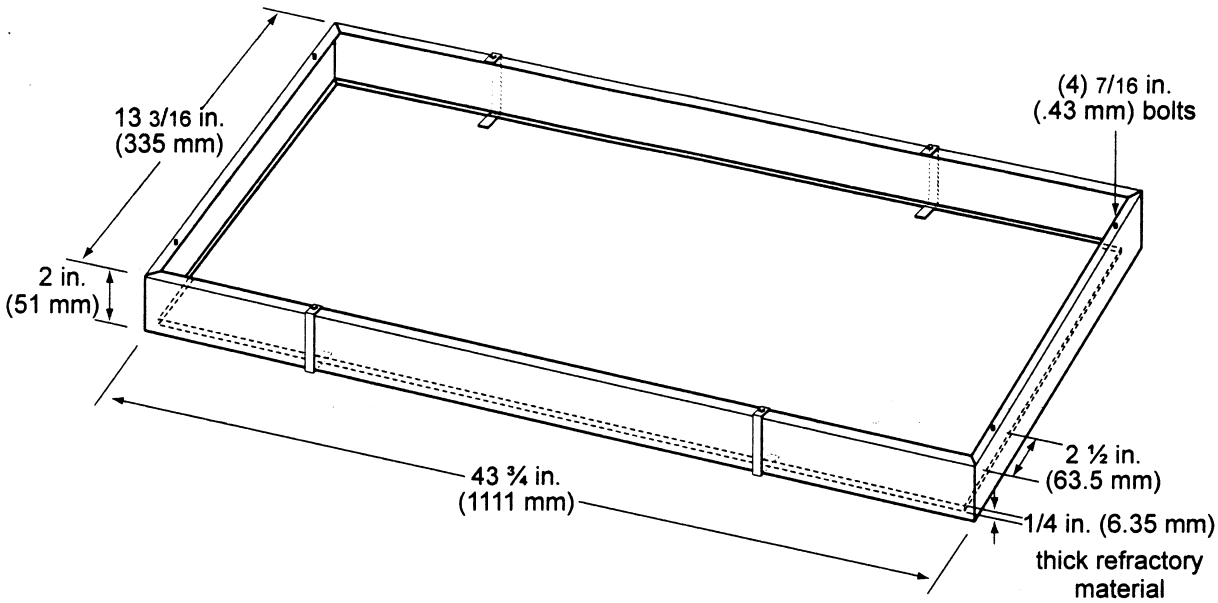

Figure 4 - Sliding Platform

(ii) Attach a ½ inch (13 mm) piece of Kaowool M™ board or other high temperature material measuring 41 ½ by 8 ¼ inches (1054 by 210 mm) to the back of the platform. This board serves as a heat retainer and protects the test specimen from excessive preheating. The height of this board must not impede the sliding platform movement (in and out of the test chamber). If the platform has been fabricated such that the back side of the platform is high enough to prevent excess preheating of the specimen when the sliding platform is out, a retainer board is not necessary.

(iii) Place the test specimen horizontally on the non-combustible board(s). Place a steel retaining/securing frame fabricated of mild steel, having a thickness of 1/8 inch (3.2 mm) and overall dimensions of 23 by 13 1/8 inches (584 by 333 mm) with a specimen opening of 19 by 10 ¾ inches (483 by 273 mm) over the test specimen. The front, back, and right portions of the top flange of the frame must rest on the top of the

sliding platform, and the bottom flanges must pinch all 4 sides of the test specimen. The right bottom flange must be flush with the sliding platform. See figure 5.

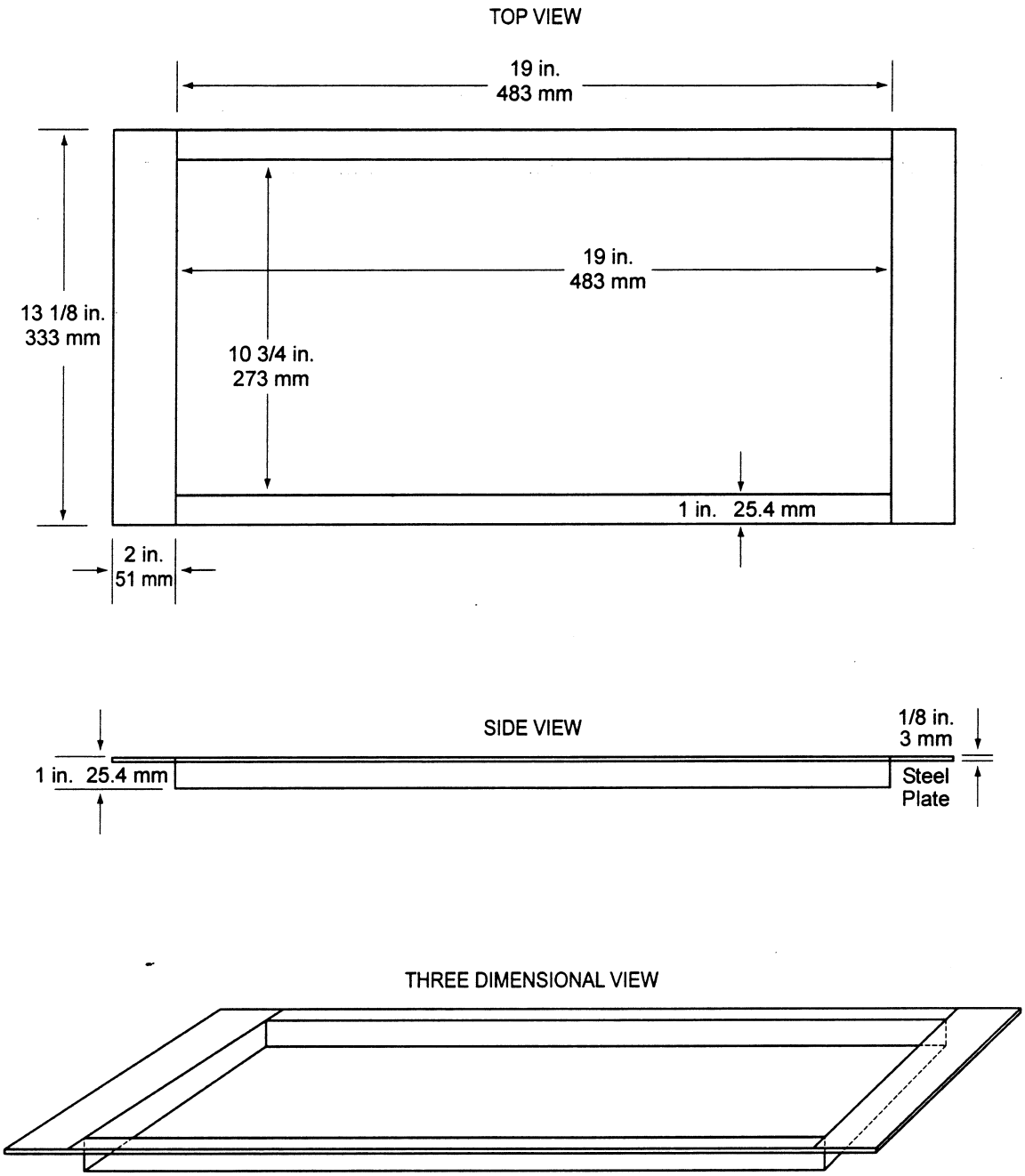

Figure 5: 3 views

(4) Pilot Burner. The pilot burner used to ignite the specimen must be a Bernzomatic™ commercial propane venturi torch with an axially symmetric burner tip and a propane supply tube with an orifice diameter of 0.006 inches (0.15 mm). The length of the burner tube must be 2 7/8 inches (71 mm). The propane flow must be adjusted via gas pressure through an in-line regulator to produce a blue inner cone length of ¾ inch (19 mm). A ¾ inch (19 mm) guide (such as a thin strip of metal) may be soldered to the top of the burner to aid in setting the flame height. The overall flame length must be approximately 5 inches long (127 mm). Provide a way to move the burner out of the ignition position so that the flame is horizontal and at least 2 inches (50 mm) above the specimen plane. See figure 6.

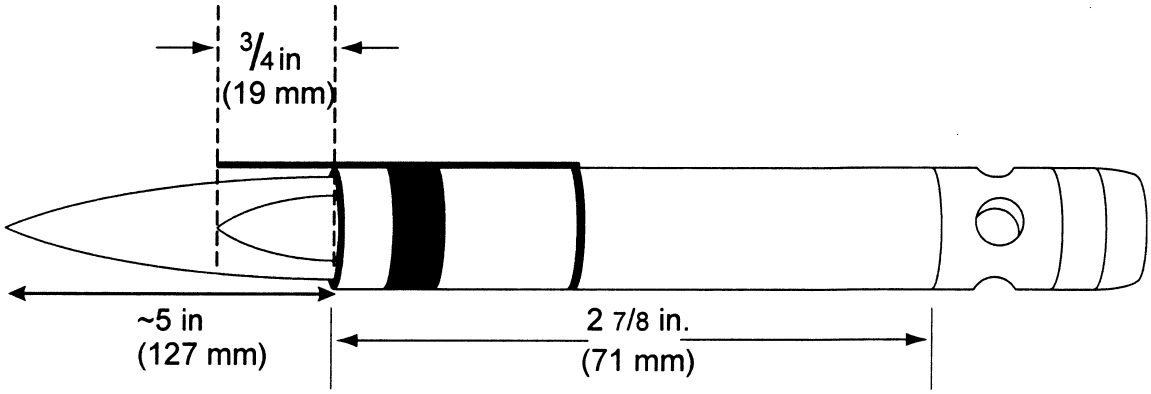

Figure 6 – Propane Pilot Burner

(5) Thermocouples. Install a 24 American Wire Gauge (AWG) Type K (Chromel-Alumel) thermocouple in the test chamber for temperature monitoring. Insert it into the chamber through a small hole drilled through the back of the chamber. Place the thermocouple so that it extends 11 inches (279 mm) out from the back of the chamber

wall, 11 ½ inches (292 mm) from the right side of the chamber wall, and is 2 inches (51 mm) below the radiant panel. The use of other thermocouples is optional.

(6) Calorimeter. The calorimeter must be a one-inch cylindrical water-cooled, total heat flux density, foil type Gardon Gage that has a range of 0 to 5 BTU/ft^2- second (0 to 5.7 Watts/cm^2).

(7) Calorimeter calibration specification and procedure.

(i) Calorimeter specification.

(A) Foil diameter must be 0.25 +/- 0.005 inches (6.35 +/- 0.13 mm).

(B) Foil thickness must be 0.0005 +/- 0.0001 inches (0.013 +/- 0.0025 mm).

(C) Foil material must be thermocouple grade Constantan.

(D) Temperature measurement must be a Copper Constantan thermocouple.

(E) The copper center wire diameter must be 0.0005 inches (0.013 mm).

(F) The entire face of the calorimeter must be lightly coated with "Black Velvet" paint having an emissivity of 96 or greater.

(ii) Calorimeter calibration.

(A) The calibration method must be by comparison to a like standardized transducer.

(B) The standardized transducer must meet the specifications given in paragraph VI(b)(6) of this appendix.

(C) Calibrate the standard transducer against a primary standard traceable to the National Institute of Standards and Technology (NIST).

(D) The method of transfer must be a heated graphite plate.

(E) The graphite plate must be electrically heated, have a clear surface area on each side of the plate of at least 2 by 2 inches (51 by 51 mm), and be 1/8 inch +/- 1/16 inch thick (3.2 +/- 1.6 mm).

(F) Center the 2 transducers on opposite sides of the plates at equal distances from the plate.

(G) The distance of the calorimeter to the plate must be no less than 0.0625 inches (1.6 mm), nor greater than 0.375 inches (9.5 mm).

(H) The range used in calibration must be at least 0-3.5 BTUs/ft^2 second (0-3.9Watts/cm^2) and no greater than 0-5.7 BTUs/ft^2 second (0-6.4 Watts/cm^2).

(I) The recording device used must record the 2 transducers simultaneously or at least within 1/10 of each other.

(8) Calorimeter fixture. With the sliding platform pulled out of the chamber, install the calorimeter holding frame and place a sheet of non-combustible material in the bottom of the sliding platform adjacent to the holding frame. This will prevent heat losses during calibration. The frame must be 13 1/8 inches (333 mm) deep (front to back) by 8 inches (203 mm) wide and must rest on the top of the sliding platform. It must be fabricated of 1/8 inch (3.2 mm) flat stock steel and have an opening that accommodates a ½ inch (12.7-mm) thick piece of refractory board, which is level with the top of the sliding platform. The board must have three 1-inch (25.4 mm) diameter holes drilled through the board for calorimeter insertion. The distance to the radiant panel surface from the centerline of the first hole ("zero" position) must be 7 ½ +/- 1/8 inches (191 +/- 3 mm). The distance between the centerline of the first hole to the centerline of the second hole must be 2 inches (51 mm). It must also be the same distance from the

centerline of the second hole to the centerline of the third hole. See figure 7. A calorimeter holding frame that differs in construction is acceptable as long as the height from the centerline of the first hole to the radiant panel and the distance between holes is the same as described in this paragraph.

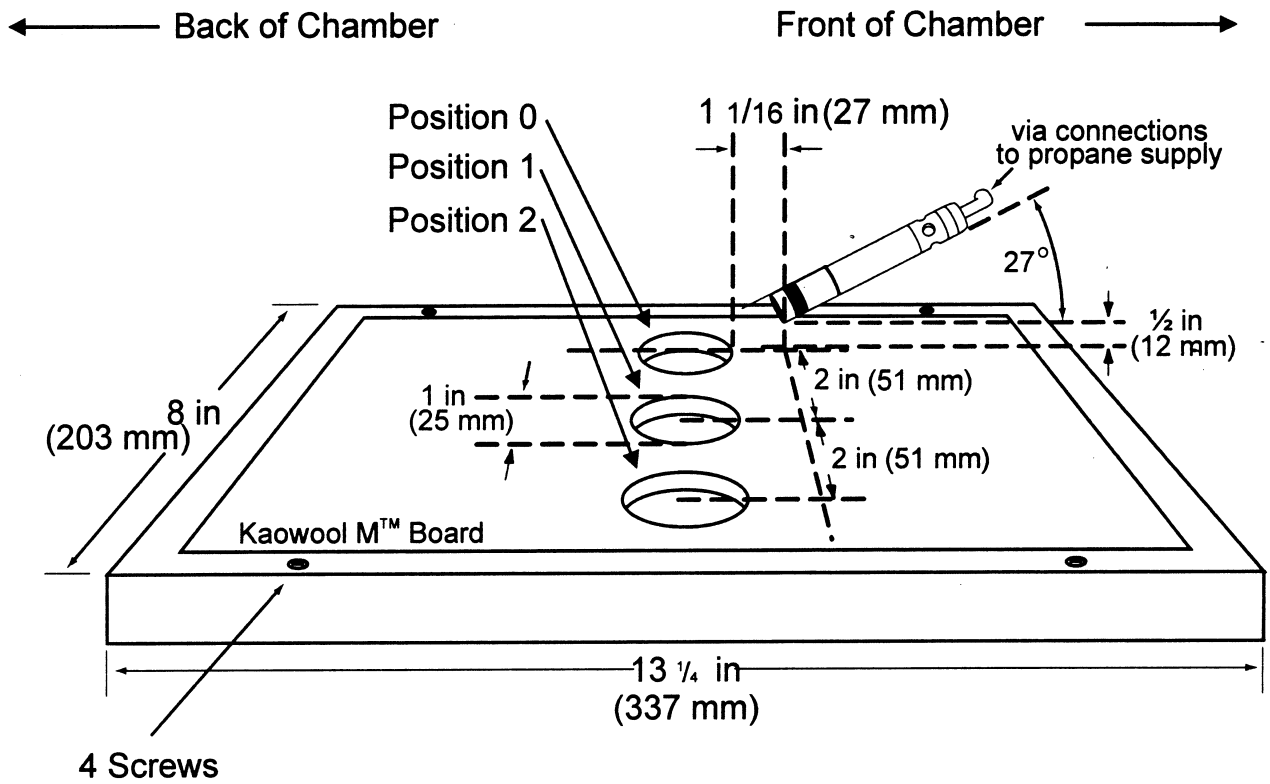

Figure 7 - Calorimeter Holding Frame

(9) Instrumentation. Provide a calibrated recording device with an appropriate range or a computerized data acquisition system to measure and record the outputs of the calorimeter and the thermocouple. The data acquisition system must be capable of recording the calorimeter output every second during calibration.

(10) Timing device. Provide a stopwatch or other device, accurate to +/- 1 second/hour, to measure the time of application of the pilot burner flame.

(c) Test specimens.

(1) Specimen preparation. Prepare and test a minimum of three test specimens. If an oriented film cover material is used, prepare and test both the warp and fill directions.

(2) Construction. Test specimens must include all materials used in construction of the insulation (including batting, film, scrim, tape etc.). Cut a piece of core material such as foam or fiberglass, and cut a piece of film cover material (if used) large enough to cover the core material. Heat sealing is the preferred method of preparing fiberglass samples, since they can be made without compressing the fiberglass ("box sample"). Cover materials that are not heat sealable may be stapled, sewn, or taped as long as the cover material is over-cut enough to be drawn down the sides without compressing the core material. The fastening means should be as continuous as possible along the length of the seams. The specimen thickness must be of the same thickness as installed in the airplane.

(3) Specimen Dimensions. To facilitate proper placement of specimens in the sliding platform housing, cut non-rigid core materials, such as fiberglass, 12 ½ inches (318mm) wide by 23 inches (584mm) long. Cut rigid materials, such as foam, 11 ½ +/- ¼ inches (292 mm +/- 6mm) wide by 23 inches (584mm) long in order to fit properly in the sliding platform housing and provide a flat, exposed surface equal to the opening in the housing.

(d) Specimen conditioning. Condition the test specimens at 70 +/- 5°F (21 +/- 2°C) and 55% +/- 10% relative humidity, for a minimum of 24 hours prior to testing.

(e) Apparatus Calibration.

(1) With the sliding platform out of the chamber, install the calorimeter holding frame. Push the platform back into the chamber and insert the calorimeter into the first hole ("zero" position). See figure 7. Close the bottom door located below the sliding platform. The distance from the centerline of the calorimeter to the radiant panel surface at this point must be 7.½ inches +/- 1/8 (191 mm +/-3). Prior to igniting the radiant panel, ensure that the calorimeter face is clean and that there is water running through the calorimeter.

(2) Ignite the panel. Adjust the fuel/air mixture to achieve 1.5 BTUs/ft^2-second +/- 5% (1.7 Watts/cm^2 +/- 5%) at the "zero" position. If using an electric panel, set the power controller to achieve the proper heat flux. Allow the unit to reach steady state (this may take up to 1 hour). The pilot burner must be off and in the down position during this time.

(3) After steady-state conditions have been reached, move the calorimeter 2 inches (51 mm) from the "zero" position (first hole) to position 1 and record the heat flux. Move the calorimeter to position 2 and record the heat flux. Allow enough time at each position for the calorimeter to stabilize. Table 1 depicts typical calibration values at the three positions.

Position	BTU's/ft^{2}sec	Watts/cm^2
"Zero" Position	1.5	1.7
Position 1	1.51-1.50-1.49	1.71-1.70-1.69
Position 2	1.43-1.44	1.62-1.63

Table 1 - Calibration Table

(4) Open the bottom door, remove the calorimeter and holder fixture. Use caution as the fixture is very hot.

(f) Test Procedure.

(1) Ignite the pilot burner. Ensure that it is at least 2 inches (51 mm) above the top of the platform. The burner must not contact the specimen until the test begins.

(2) Place the test specimen in the sliding platform holder. Ensure that the test sample surface is level with the top of the platform. At "zero" point, the specimen surface must be 7 ½ inches +/- 1/8 inch (191 mm +/- 3) below the radiant panel.

(3) Place the retaining/securing frame over the test specimen. It may be necessary (due to compression) to adjust the sample (up or down) in order to maintain the distance from the sample to the radiant panel (7 ½ inches +/- 1/8 inch (191 mm+/-3) at "zero" position). With film/fiberglass assemblies, it is critical to make a slit in the film cover to purge any air inside. This allows the operator to maintain the proper test specimen position (level with the top of the platform) and to allow ventilation of gases during testing. A longitudinal slit, approximately 2 inches (51mm) in length, must be centered 3 inches +/- ½ inch (76mm+/-13mm) from the left flange of the securing frame. A utility knife is acceptable for slitting the film cover.

(4) Immediately push the sliding platform into the chamber and close the bottom door.

(5) Bring the pilot burner flame into contact with the center of the specimen at the "zero" point and simultaneously start the timer. The pilot burner must be at a 27° angle with the sample and be approximately ½ inch (12 mm) above the sample. See figure 7.

A stop, as shown in figure 8, allows the operator to position the burner correctly each time.

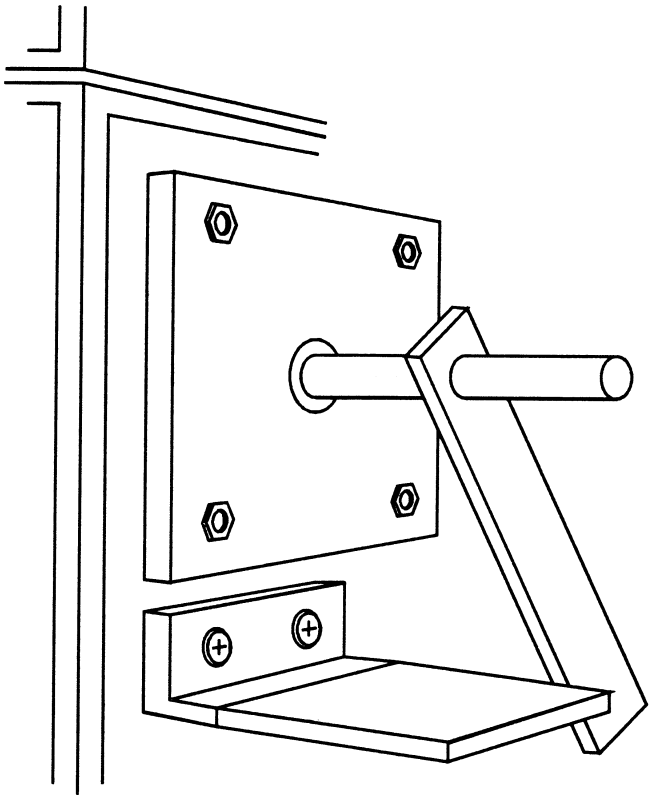

Figure 8 - Propane Burner Stop

(6) Leave the burner in position for 15 seconds and then remove to a position at least 2 inches (51 mm) above the specimen.

(g) Report.

(1) Identify and describe the test specimen.

(2) Report any shrinkage or melting of the test specimen.

(3) Report the flame propagation distance. If this distance is less than 2 inches, report this as a pass (no measurement required).

(4) Report the after-flame time.

(h) Requirements.

(1) There must be no flame propagation beyond 2 inches (51 mm) to the left of the centerline of the pilot flame application.

(2) The flame time after removal of the pilot burner may not exceed 3 seconds on any specimen.

Part VII – Test Method to Determine the Burnthough Resistance of Thermal/Acoustic Insulation Materials

Use the following test method to evaluate the burnthrough resistance characteristics of aircraft thermal/acoustic insulation materials when exposed to a high intensity open flame.

(a) Definitions.

Burnthrough time means the time, in seconds, for the burner flame to penetrate the test specimen, and/or the time required for the heat flux to reach 2.0 Btu/ft^{2}sec (2.27 W/cm^2) on the inboard side, at a distance of 12 inches (30.5 cm) from the front surface of the insulation blanket test frame, whichever is sooner. The burnthrough time is measured at the inboard side of each of the insulation blanket specimens.

Insulation blanket specimen means one of two specimens positioned in either side of the test rig, at an angle of 30° with respect to vertical.

Specimen set means two insulation blanket specimens. Both specimens must represent the same production insulation blanket construction and materials, proportioned to correspond to the specimen size.

(b) Apparatus.

(1) The arrangement of the test apparatus is shown in figures 1 and 2 and must include the capability of swinging the burner away from the test specimen during warm-up.

Figure 1. Burnthrough Test Apparatus Specimen Holder

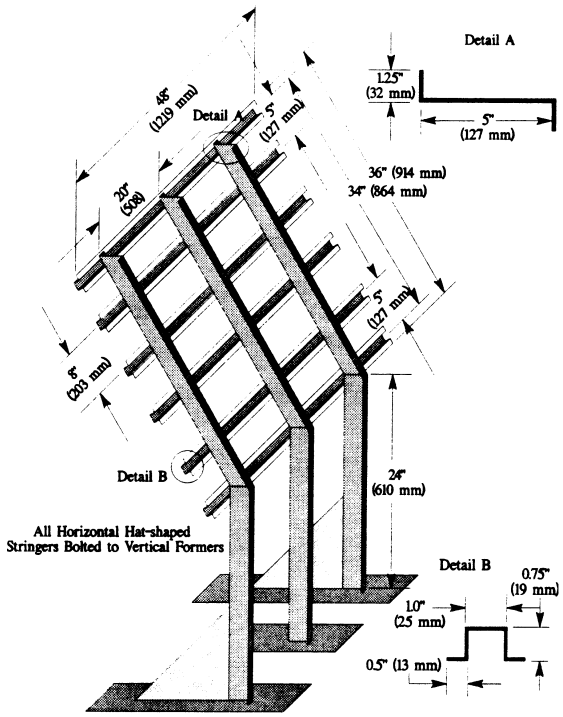

(2) Test burner. The test burner must be a modified gun-type such as the Park Model DPL 3400. Flame characteristics are highly dependent on actual burner setup. Parameters such as fuel pressure, nozzle depth, stator position, and intake airflow must be properly adjusted to achieve the correct flame output.

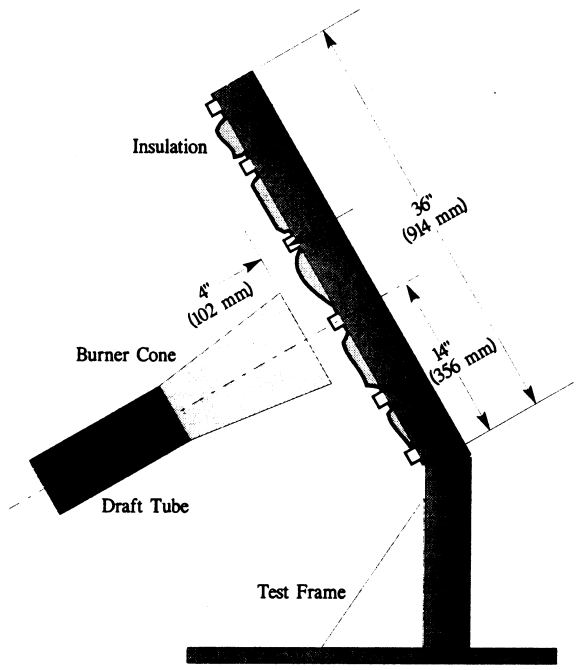

Figure 2. Burnthrough Test Apparatus

(i) Nozzle. A nozzle must maintain the fuel pressure to yield a nominal 6.0 gal/hr (0.378 L/min) fuel flow. A Monarch-manufactured 80° PL (hollow cone) nozzle nominally rated at 6.0 gal/hr at 100 lb/in^2 (0.71 MPa) delivers a proper spray pattern.

(ii) Fuel Rail. The fuel rail must be adjusted to position the fuel nozzle at a depth of 0.3125 inch (8 mm) from the end plane of the exit stator, which must be mounted in the end of the draft tube.

(iii) Internal Stator. The internal stator, located in the middle of the draft tube, must be positioned at a depth of 3.75 inches (95 mm) from the tip of the fuel nozzle. The stator must also be positioned such that the integral igniters are located at an angle midway between the 10 and 11 o'clock position, when viewed looking into the draft tube. Minor deviations to the igniter angle are acceptable if the temperature and heat flux requirements conform to the requirements of paragraph VII(e) of this appendix.

(iv) Blower Fan. The cylindrical blower fan used to pump air through the burner must measure 5.25 inches (133 mm) in diameter by 3.5 inches (89 mm) in width.

(v) Burner cone. Install a 12 ±0.125-inch (305 ±3 mm) burner extension cone at the end of the draft tube. The cone must have an opening 6 ±0.125-inch (152 ±3 mm) high and 11 ±0.125-inch (280 ±3 mm) wide (see figure 3).

(VI) ~~(iii)~~ Fuel. Use JP-8, Jet A, or their international equivalent, at a flow rate ~~of 6.0~~ ±0.2 gal/hr (0.378 ±0.0126 L/min). If this fuel is unavailable, ASTM K2 fuel (Number 2 grade kerosene) or ASTM D2 fuel (Number 2 grade fuel oil or Number 2 diesel fuel) are acceptable if the nominal fuel flow rate, temperature, and heat flux measurements conform to the requirements of paragraph VII(e) of this appendix.

(vii) ~~(iv)~~ Fuel pressure regulator. Provide a fuel pressure regulator, adjusted to deliver a nominal 6.0 gal/hr (0.378 L/min) flow rate. An operating fuel pressure of 100 lb/in^2 (0.71 MPa) for a nominally rated 6.0 gal/hr 80° spray angle nozzle (such as a PL type) delivers 6.0 $\pm$0.2 gal/hr (0.378 $\pm$0.0126 L/min).

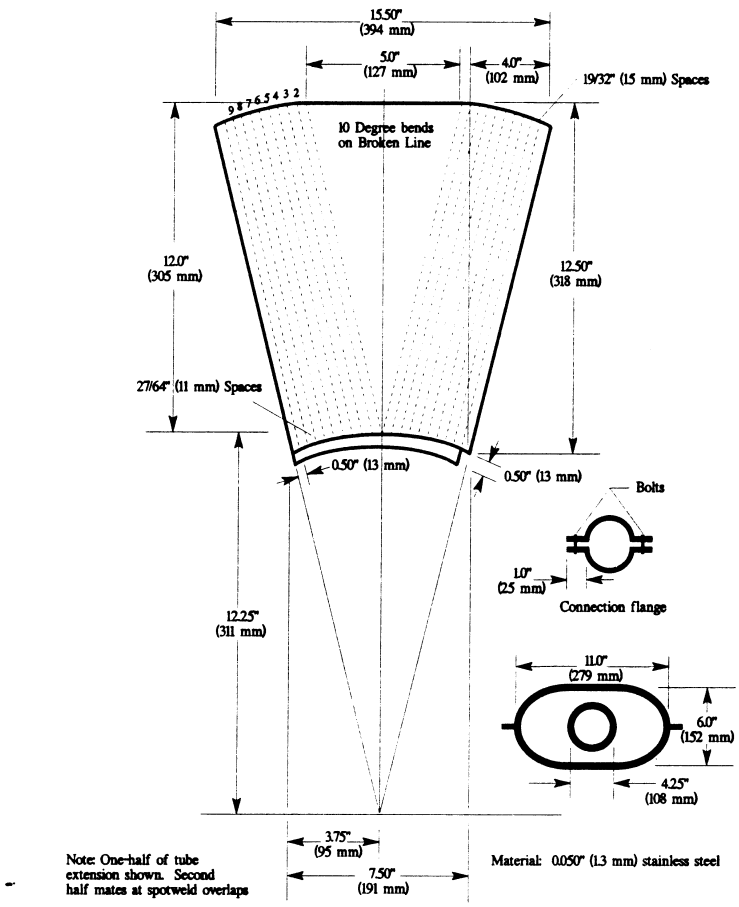

Figure 3. Burner Draft Tube Extension Cone Diagram

(3) Calibration rig and equipment.

(i) Construct individual calibration rigs to incorporate a calorimeter and thermocouple rake for the measurement of heat flux and temperature. Position the

calibration rigs to allow movement of the burner from the test rig position to either the heat flux or temperature position with minimal difficulty.

(ii) Calorimeter. The calorimeter must be a total heat flux, foil type Gardon Gage of an appropriate range such as 0-20 Btu/ft^2-sec (0-22.7 W/cm^2), accurate to $\pm$3% of the indicated reading. The heat flux calibration method must be in accordance with paragraph VI(b)(7) of this appendix.

(iii) Calorimeter mounting. Mount the calorimeter in a 6- by 12- $\pm$0.125 inch (152- by 305- $\pm$3 mm) by 0.75 $\pm$0.125 inch (19 mm $\pm$3 mm) thick insulating block which is attached to the heat flux calibration rig during calibration (figure 4). Monitor the insulating block for deterioration and replace it when necessary. Adjust the mounting as necessary to ensure that the calorimeter face is parallel to the exit plane of the test burner cone.

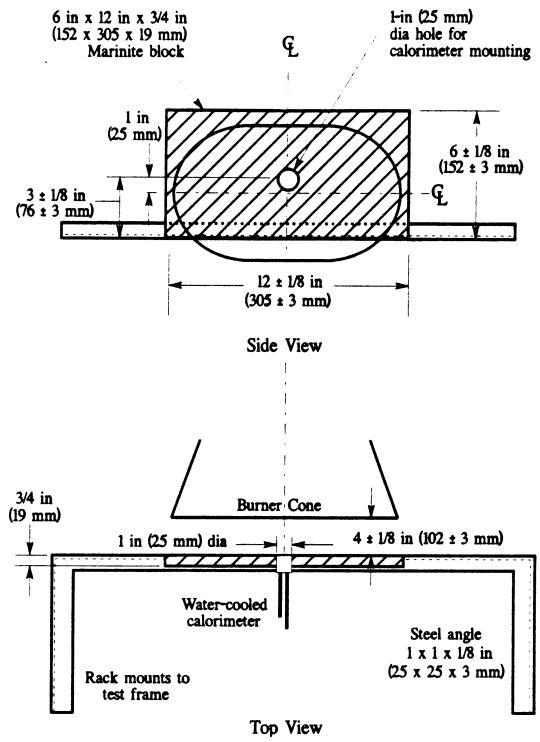

Figure 4. Calorimeter Position Respective of Burner Cone

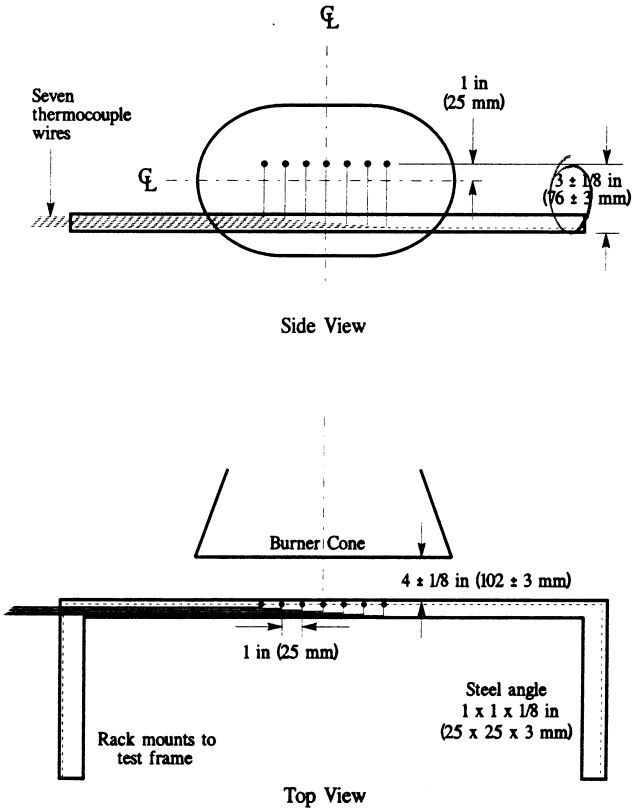

Figure 5. Thermocouple Rake Position Respective of Burner Cone

(iv) Thermocouples. Provide seven 1/8-inch (3.2 mm) ceramic packed, metal sheathed, type K (Chromel-alumel), grounded junction thermocouples with a nominal 24 American Wire Gauge (AWG) size conductor for calibration. Attach the thermocouples to a steel angle bracket to form a thermocouple rake for placement in the calibration rig during burner calibration (figure 5).

(v) Air velocity meter. Use a vane-type air velocity meter to calibrate the velocity of air entering the burner. An Omega Engineering Model HH30A is satisfactory. Use a suitable adapter to attach the measuring device to the inlet side of the burner to prevent air from entering the burner other than through the measuring device, which would produce erroneously low readings. Use a flexible duct, measuring 4 inches wide (102 mm) by 20 feet long (6.1 meters), to supply fresh air to the burner intake to prevent damage to the air velocity meter from ingested soot. An optional airbox permanently mounted to the burner intake area can effectively house the air velocity meter and provide a mounting port for the flexible intake duct.

(4) Test specimen mounting frame. Make the mounting frame for the test specimens of 1/8-inch (3.2 mm) thick steel as shown in figure 1, except for the center vertical former, which should be ¼-inch (6.4 mm) thick to minimize warpage. The specimen mounting frame stringers (horizontal) should be bolted to the test frame formers (vertical) such that the expansion of the stringers will not cause the entire structure to warp. Use the mounting frame for mounting the two insulation blanket test specimens as shown in figure 2.

(5) Backface calorimeters. Mount two total heat flux Gardon type calorimeters behind the insulation test specimens on the back side (cold) area of the test specimen mounting frame as shown in figure 6. Position the calorimeters along the same plane as the burner cone centerline, at a distance of 4 inches (102 mm) from the vertical centerline of the test frame.

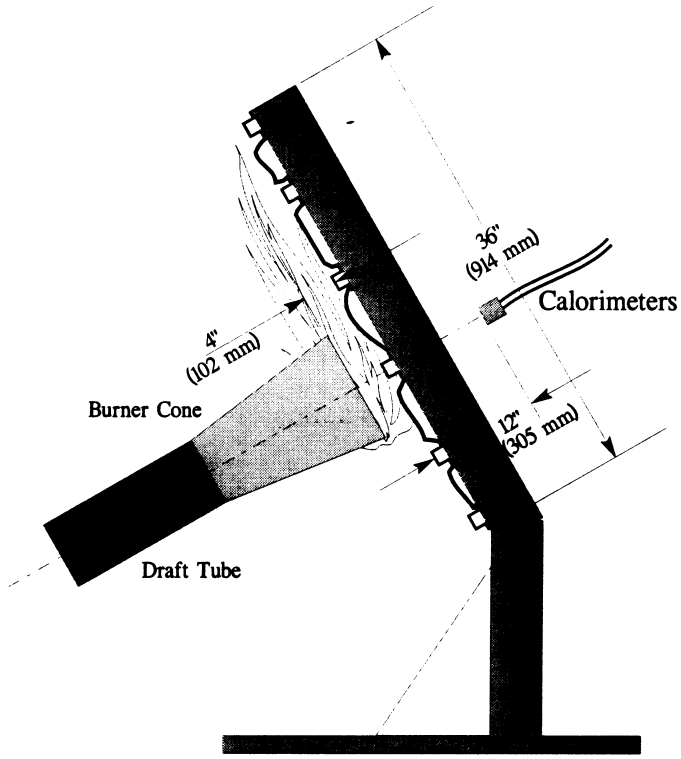

Figure 6. Position of Backface Calorimeters Relative to Test Specimen Frame

(i) The calorimeters must be a total heat flux, foil type Gardon Gage of an appropriate range such as 0-5 Btu/ft^2-sec (0-5.7 W/cm^2), accurate to $\pm$3% of the indicated reading. The heat flux calibration method must comply with paragraph VI(b)(7) of this appendix.

(6) Instrumentation. Provide a recording potentiometer or other suitable calibrated instrument with an appropriate range to measure and record the outputs of the calorimeter and the thermocouples.

(7) Timing device. Provide a stopwatch or other device, accurate to $\pm$1%, to measure the time of application of the burner flame and burnthrough time.

(8) Test chamber. Perform tests in a suitable chamber to reduce or eliminate the possibility of test fluctuation due to air movement. The chamber must have a minimum floor area of 10 by 10 feet (305 by 305 cm).

(i) Ventilation hood. Provide the test chamber with an exhaust system capable of removing the products of combustion expelled during tests.

(c) Test Specimens.

(1) Specimen preparation. Prepare a minimum of three specimen sets of the same construction and configuration for testing.

(2) Insulation blanket test specimen.

(i) For batt-type materials such as fiberglass, the constructed, finished blanket specimen assemblies must be 32 inches wide by 36 inches long (81.3 by 91.4 cm), exclusive of heat sealed film edges.

(ii) For rigid and other non-conforming types of insulation materials, the finished test specimens must fit into the test rig in such a manner as to replicate the actual in-service installation.

(3) Construction. Make each of the specimens tested using the principal components (i.e., insulation, fire barrier material if used, and moisture barrier film) and assembly processes (representative seams and closures).

(i) Fire barrier material. If the insulation blanket is constructed with a fire barrier material, place the fire barrier material in a manner reflective of the installed arrangement For example, if the material will be placed on the outboard side of the insulation material, inside the moisture film, place it the same way in the test specimen.

(ii) Insulation material. Blankets that utilize more than one variety of insulation (composition, density, etc.) must have specimen sets constructed that reflect the insulation combination used. If, however, several blanket types use similar insulation combinations, it is not necessary to test each combination if it is possible to bracket the various combinations.

(iii) Moisture barrier film. If a production blanket construction utilizes more than one type of moisture barrier film, perform separate tests on each combination. For example, if a polyimide film is used in conjunction with an insulation in order to enhance the burnthrough capabilities, also test the same insulation when used with a polyvinyl fluoride film.

(iv) Installation on test frame. Attach the blanket test specimens to the test frame using 12 steel spring type clamps as shown in figure 7. Use the clamps to hold the blankets in place in both of the outer vertical formers, as well as the center vertical former (4 clamps per former). The clamp surfaces should measure 1 inch by 2 inches (25 by 51 mm). Place the top and bottom clamps 6 inches (15.2 cm) from the top and bottom of the

test frame, respectively. Place the middle clamps 8 inches (20.3 cm) from the top and bottom clamps.

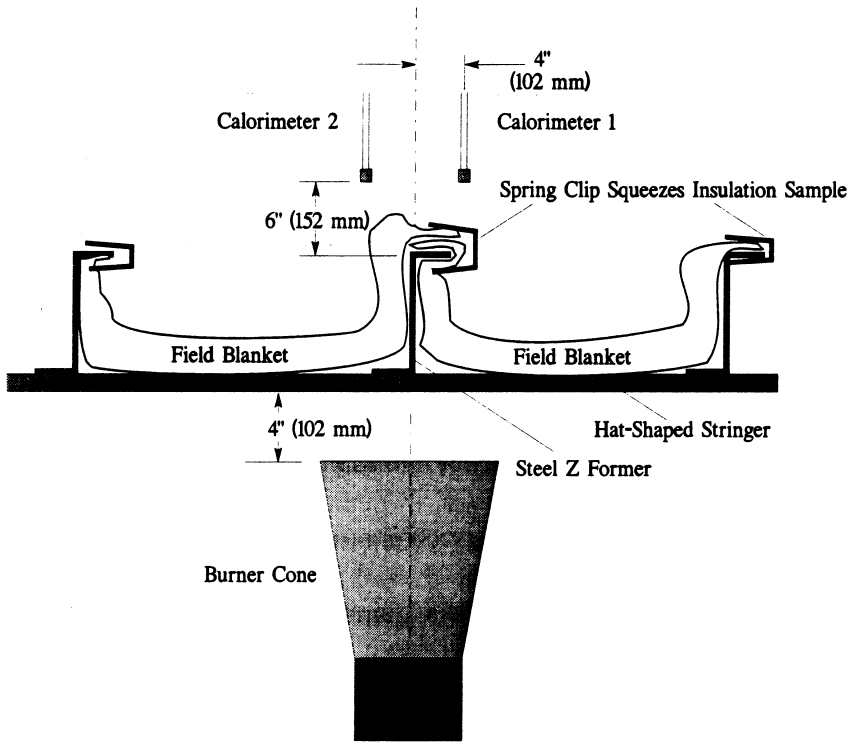

Figure 7. Test Specimen Installation on Test Frame

(Note: For blanket materials that cannot be installed in accordance with figure 7 above, the blankets must be installed in a manner approved by the FAA.)

(v) Conditioning. Condition the specimens at 70° ±5°F (21° ±2°C) and 55% ±10% relative humidity for a minimum of 24 hours prior to testing.

(d) Preparation of apparatus.

(1) Level and center the frame assembly to ensure alignment of the calorimeter and/or thermocouple rake with the burner cone.

(2) Turn on the ventilation hood for the test chamber. Do not turn on the burner blower. Measure the airflow of the test chamber using a vane anemometer or equivalent

measuring device. The vertical air velocity just behind the top of the upper insulation blanket test specimen must be 100 ±50 ft/min (0.51 ±0.25 m/s). The horizontal air velocity at this point must be less than 50 ft/min (0.25 m/s).

(3) If a calibrated flow meter is not available, measure the fuel flow rate using a graduated cylinder of appropriate size. Turn on the burner motor/fuel pump, after insuring that the igniter system is turned off. Collect the fuel via a plastic or rubber tube into the graduated cylinder for a 2-minute period. Determine the flow rate in gallons per hour. The fuel flow rate must be 6.0 ±0.2 gallons per hour (0.378 ±0.0126 L/min).

(e) Calibration.

(1) Position the burner in front of the calorimeter so that it is centered and the vertical plane of the burner cone exit is 4 ±0.125 inches (102 ±3 mm) from the calorimeter face. Ensure that the horizontal centerline of the burner cone is offset 1 inch below the horizontal centerline of the calorimeter (figure 8). Without disturbing the calorimeter position, rotate the burner in front of the thermocouple rake, such that the middle thermocouple (number 4 of 7) is centered on the burner cone.

Burner Type
Park Model DPL 3400
(609) 344-7709

Thermocouples
Thermo Electric Co., Inc
Type K Grounded 0.125 inch (3.2 mm)
Ceramic Packed, Metal Sheathed
(201) 843-5800

Air Velocity Meter
Omega Engineering, Inc
Model HH30A
1-800-848-4286

Heat Flux Transducer
Vatell Corporation
Model 1000 Series
(540) 961-2001

Nozzle Type
Monarch Manufacturing Co., Inc
80° PL (hollow cone)
1-800-394-7377

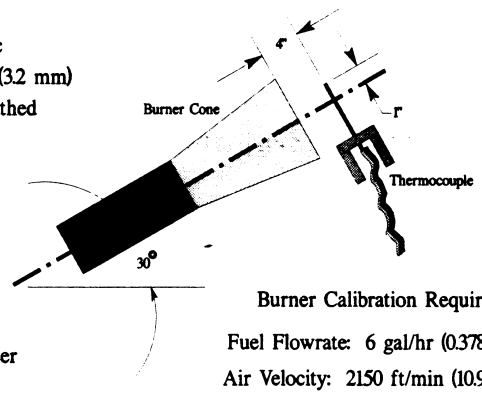

Burner Calibration Requirements

Fuel Flowrate: 6 gal/hr (0.378 L/min)
Air Velocity: 2150 ft/min (10.92 m/s)
Temperature: 1900 ± 100°F (1038 ± 56°C)
Heat Flux: 16.0 ± 0.8 Btu/ft^2-sec (18.2 ± 0.9 W/cm^2)

Figure 8. Burner Information and Calibration Settings

Ensure that the horizontal centerline of the burner cone is also offset 1 inch below the horizontal centerline of the thermocouple tips. Re-check measurements by rotating the burner to each position to ensure proper alignment between the cone and the calorimeter and thermocouple rake. (Note: The test burner mounting system must incorporate "detents" that ensure proper centering of the burner cone with respect to both the calorimeter and the thermocouple rakes, so that rapid positioning of the burner can be achieved during the calibration procedure.)

(2) Position the air velocity meter in the adapter or airbox, making certain that no gaps exist where air could leak around the air velocity measuring device. Turn on the blower/motor while ensuring that the fuel solenoid and igniters are off. Adjust the air intake velocity to a level of 2150 ft/min, (10.92 m/s) then turn off the blower/motor. (Note: The Omega HH30 air velocity meter measures 2.625 inches in diameter. To

calculate the intake airflow, multiply the cross-sectional area (0.03758 ft^2) by the air velocity (2150 ft/min) to obtain 80.80 ft^3/min. An air velocity meter other than the HH30 unit can be used, provided the calculated airflow of 80.80 ft^3/min (2.29 m^3/min) is equivalent.)

(3) Rotate the burner from the test position to the warm-up position. Prior to lighting the burner, ensure that the calorimeter face is clean of soot deposits, and there is water running through the calorimeter. Examine and clean the burner cone of any evidence of buildup of products of combustion, soot, etc. Soot buildup inside the burner cone may affect the flame characteristics and cause calibration difficulties. Since the burner cone may distort with time, dimensions should be checked periodically.

(4) While the burner is still rotated to the warm-up position, turn on the blower/motor, igniters and fuel flow, and light the burner. Allow it to warm up for a period of 2 minutes. Move the burner into the calibration position and allow 1 minute for calorimeter stabilization, then record the heat flux once every second for a period of 30 seconds. Turn off burner, rotate out of position, and allow to cool. Calculate the average heat flux over this 30-second duration. The average heat flux should be 16.0 $\pm$0.8 Btu/ft^2 sec (18.2 $\pm$0.9 W/cm^2).

(5) Position the burner in front of the thermocouple rake. After checking for proper alignment, rotate the burner to the warm-up position, turn on the blower/motor, igniters and fuel flow, and light the burner. Allow it to warm up for a period of 2 minutes. Move the burner into the calibration position and allow 1 minute for thermocouple stabilization, then record the temperature of each of the 7 thermocouples once every second for a period of 30 seconds. Turn off burner, rotate out of position, and

allow to cool. Calculate the average temperature of each thermocouple over this 30-second period and record. The average temperature of each of the 7 thermocouples should be 1900°F ± 100°F (1038 ± 56°C).

(6) If either the heat flux or the temperatures are not within the specified range, adjust the burner intake air velocity and repeat the procedures of paragraphs (4) and (5) above to obtain the proper values. Ensure that the inlet air velocity is within the range of 2150 ft/min ±50 ft/min (10.92 ±0.25 m/s).

(7) Calibrate prior to each test until consistency has been demonstrated. After consistency has been confirmed, several tests may be conducted with calibration conducted before and after a series of tests.

(f) Test procedure.

(1) Secure the two insulation blanket test specimens to the test frame. The insulation blankets should be attached to the test rig center vertical former using four spring clamps positioned as shown in figure 7 (according to the criteria of paragraph (c)(4) or (c)(4)(i) of this part of this appendix).

(2) Ensure that the vertical plane of the burner cone is at a distance of 4 ±0.125 inch (102 ±3 mm) from the outer surface of the horizontal stringers of the test specimen frame, and that the burner and test frame are both situated at a 30° angle with respect to vertical.

(3) When ready to begin the test, direct the burner away from the test position to the warm-up position so that the flame will not impinge on the specimens prematurely. Turn on and light the burner and allow it to stabilize for 2 minutes.

(4) To begin the test, rotate the burner into the test position and simultaneously start the timing device.

(5) Expose the test specimens to the burner flame for 4 minutes and then turn off the burner. Immediately rotate the burner out of the test position.

(6) Determine (where applicable) the burnthrough time, or the point at which the heat flux exceeds 2.0 Btu/ft^2-sec (2.27 W/cm^2).

(g) Report.

(1) Identify and describe the specimen being tested.

(2) Report the number of insulation blanket specimens tested.

(3) Report the burnthrough time (if any), and the maximum heat flux on the back face of the insulation blanket test specimen, and the time at which the maximum occurred.

(h) Requirements.

(1) Each of the two insulation blanket test specimens must not allow fire or flame penetration in less than 4 minutes.

(2) Each of the two insulation blanket test specimens must not allow more than 2.0 Btu/ft^2-sec (2.27 W/cm^2) on the cold side of the insulation specimens at a point 12 inches (30.5 cm) from the face of the test rig.

PART 91--GENERAL OPERATING AND FLIGHT RULES

4. The authority citation for part 91 continues to read as follows:

Authority: 49 U.S.C. 106(g), 40103, 40113, 40120, 44101, 44111, 44701, 44709, 44711, 44712, 44715, 44716, 44717, 44722, 46306, 46315, 46316, 46502, 46504, 46506-46507, 47122, 47508, 47528-47531.

5. Amend § 91.613 by redesignating the existing text as paragraph (a), and adding paragraph (b) to read as follows:

§ 91.613 Materials for compartment interiors.

* * * * *

(b) *Thermal/acoustic insulation materials*. For transport category airplanes type certificated after January 1, 1958:

(1) For airplanes manufactured before ~~[INSERT DATE 2 YEARS AFTER THE EFFECTIVE DATE OF THE FINAL RULE]~~ September 2, 2005, when thermal/acoustic insulation materials are installed in the fuselage as replacements after ~~[INSERT DATES 2 YEARS AFTER THE EFFECTIVE DATE OF THE FINAL RULE]~~ SEPTEMBER 2, 2005, those materials must meet the flame propagation requirements of § 25.856 of this chapter, effective ~~[INSERT EFFECTIVE DATE OF THE FINAL RULE]~~ SEPTEMBER 2, 2003.

(2) For airplanes manufactured after ~~[INSERT DATE 2 YEARS AFTER THE EFFECTIVE DATE OF THE FINAL RULE]~~ September 2, 2005, thermal/acoustic insulation materials installed in the fuselage must meet the flame propagation requirements of § 25.856 of this chapter, effective ~~[INSERT EFFECTIVE DATE OF THE FINAL RULE]~~ September 2, 2003.

PART 121--OPERATING REQUIREMENTS: DOMESTIC, FLAG, AND SUPPLEMENTAL OPERATIONS

6. The authority citation for part 121 continues to read as follows:

Authority: 49 U.S.C. 106(g), 40113, 40119, 44101, 44701-44702, 44705, 44709-44711, 44713, 44716-44717, 44722, 44901, 44903-44904, 44912, 46105.

7. Amend § 121.312 by adding paragraph (e) to read as follows:

§ 121.312 Materials for compartment interiors.

* * * * *

(e) *Thermal/acoustic insulation materials*. For transport category airplanes type certificated after January 1, 1958:

(1) For airplanes manufactured before [~~INSERT DATE 2 YEARS AFTER THE EFFECTIVE DATE OF THE FINAL RULE~~] September 2, 2005, when thermal/acoustic insulation materials are installed in the fuselage as replacements after [~~INSERT DATE 2 YEARS AFTER THE EFFECTIVE DATE OF THE FINAL RULE~~] September 2, 2005, those materials must meet the flame propagation requirements of § 25.856 of this chapter, effective [~~INSERT EFFECTIVE DATE OF THE FINAL RULE~~] September 2, 2003.

(2) For airplanes manufactured after [~~INSERT DATE 2 YEARS AFTER THE EFFECTIVE DATE OF THE FINAL RULE~~] September 2, 2005, thermal/acoustic insulation materials installed in the fuselage must meet the flame propagation requirements of § 25.856 of this chapter, effective [~~INSERT EFFECTIVE DATE OF THE FINAL RULE~~] September 2, 2003.

(3) For airplanes with a passenger capacity of 20 or greater, manufactured after [~~INSERT DATE 4 YEARS AFTER THE EFFECTIVE DATE OF THE FINAL RULE~~] September 2, 2007, thermal/acoustic insulation materials installed in the lower half of the fuselage must meet the flame penetration resistance requirements of § 25.856 of this chapter, effective [~~INSERT EFFECTIVE DATE OF THE FINAL RULE~~] September 2, 2003.

PART 125--CERTIFICATION AND OPERATIONS: AIRPLANES HAVING A SEATING CAPACITY OF 20 OR MORE PASSENGERS OR A MAXIMUM PAYLOAD CAPACITY OF 6,000 POUNDS OR MORE

8. The authority citation for part 125 continues to read as follows:

Authority: 49 U.S.C. 106(g), 40113, 44701-44702, 44705, 44710-44711, 44713, 44716-44717, 44722.

9. Amend § 125.113 by adding paragraph (c) to read as follows:

§ 125.113 Cabin interiors.

* * * * *

(c) *Thermal/acoustic insulation materials*. For transport category airplanes type certificated after January 1, 1958:

(1) For airplanes manufactured before [I~~NSERT DATE 2 YEARS AFTER TH~~E September 2, 2005 E~~FFECTIVE DATE OF THE FINAL RULE~~], when thermal/acoustic insulation materials are installed in the fuselage as replacements after [~~INSERT DATE 2 YEARS AFTER THE EFFECTIVE DATE OF THE FINAL RULE~~] September 2, 2005, those materials must meet the flame propagation requirements of § 25.856 of this chapter, effective [~~INSERT EFFECTIVE DATE OF THE FINAL RULE~~] September 2, 2003

(2) For airplanes manufactured after [I~~NSERT DATE 2 YEARS AFTER TH~~E September 2, 2005 ~~EFFECTIVE DATE OF THE FINAL RULE~~], thermal/acoustic insulation materials installed in the fuselage must meet the flame propagation requirements of § 25.856 of this chapter, effective [~~INSERT EFFECTIVE DATE OF THE FINAL RULE~~] September 2, 2003.

PART 135--OPERATING REQUIREMENTS: COMMUTER AND ON-DEMAND OPERATIONS AND RULES GOVERNING PERSONS ON BOARD SUCH AIRCRAFT

10. The authority citation for part 135 continues to read as follows:

Authority: 49 U.S.C. 106(g), 40113, 44701-44702, 44705, 44709, 44711-44713, 44715-44717, 44722.

11. Amend § 135.170 by adding paragraph (c) to read as follows:

§ 135.170 Materials for compartment interiors.

* * * * *

(c) *Thermal/acoustic insulation materials*. For transport category airplanes type certificated after January 1, 1958:

(1) For airplanes manufactured before [~~INSERT DATE 2 YEARS AFTER THE EFFECTIVE DATE OF THE FINAL RULE~~] September 2, 2005, when thermal/acoustic insulation materials are installed in the fuselage as replacements after [~~INSERT DATE 2 YEARS AFTER THE EFFECTIVE DATE OF THE FINAL RULE~~] September 2, 2005, those materials must meet the flame propagation requirements of § 25.856 of this chapter, effective [~~INSERT EFFECTIVE DATE OF THE FINAL RULE~~] September 2, 2003.

(2) For airplanes manufactured after [~~INSERT DATE 2 YEARS AFTER THE EFFECTIVE DATE OF THE FINAL RULE~~] September 2, 2005, thermal/acoustic insulation materials installed in the fuselage must meet the flame propagation requirements of § 25.856 of this chapter, effective [~~INSERT EFFECTIVE DATE OF THE FINAL RULE~~] September 2, 2003.

Issued in Washington, DC, on July 14, 2003.

Marion Blakey
Administrator

Certified to be a True Copy