247436

U.S. Department of Transportation

National Highway Traffic Safety Administration

Memorandum

NHTSA-03-15351-5

Subject: Docket Submittal: Docket NHTSA-03-15351 Child Restraint Systems

Date: JUN 24 2003

From: Mike Huntley, Safety Standards Engineer
Structures and Special Systems Division

Reply to Attn. of:

To: Docket Section

THRU: Roger A. Saul
Director, Office of Crashworthiness Research

for Jacqueline Glassman
Chief Counsel

Please submit the following to the agency's docket in support of the final rule on child restraint systems (RIN 2127-A134): Drawing Package NHTSA-213-2003, "NHTSA Standard Seat Assembly; FMVSS No. 213," dated June 4, 2003. The package consists of a title sheet and 11 drawing sheets.

A copy of the material may be obtained through the U.S. Department of Transportation Docket Management System (Docket No. NHTSA-03-15351; web access at http://dms.dot.gov), or by contacting the following:

Leet-Melbrook
Division of New RT
18810 Woodfield Rd.
Gaithersburg, Md. 20879
Tel. (301) 670-0090
www.leetmelbrook.com

Attachment

Get it together!
SAFETY BELTS SAVE LIVES

DRAWING PACKAGE: NHTSA STANDARD SEAT ASSEMBLY; FMVSS NO. 213

NAME	SOURCE	DRAWING SHEET NUMBER	CHANGE LETTER	DATE
SEAT ASSEMBLY, NHTSA SEAT	NAVAIR	2003HA100		05/14/2003
FRAME ASSEMBLY; NHTSA SEAT	NAVAIR	2003HA200		05/14/2003
FRAME, FRONT AND SIDE ASSEMBLY; NHTSA SEAT	NAVAIR	2003HA201		05/07/2003
FRAME, BOTTOM ASSEMBLY; NHTSA SEAT	NAVAIR	2003HA202		05/14/2003
FRAME, TOP ASSEMBLY; NHTSA SEAT	NAVAIR	2003HA203		05/07/2003
ANCHOR POINTS ASSEMBLY; NHTSA SEAT	NAVAIR	2003HA204		05/14/2003
FRAME, BACK ASSEMBLY; NHTSA SEAT	NAVAIR	2003HA205		05/07/2003
CUSHION, ASSEMBLY; NHTSA	NAVAIR	2003HA300		05/21/2003
CUSHION, SEAT ASSEMBLY; NHTSA SEAT	NAVAIR	2003HA301		05/07/2003
CUSHION, BACK ASSEMBLY; NHTSA SEAT	NAVAIR	2003HA302		05/21/2003
BACKING, SEAT AND BACK ASSEMBLY; NHTSA SEAT	NAVAIR	2003HA303		05/21/2003

DATE	LETTER	WAS	CHECK
REVISIONS			

NATIONAL HIGHWAY TRAFFIC SAFETY ADMINISTRATION

June 4, 2003

TITLE

DRAWING PACKAGE: NHTSA STANDARD SEAT ASSEMBLY; FMVSS NO. 213

NO. NHTSA-213-2003

REVISIONS				
ZONE	REV	DESCRIPTION	DATE	APPROVED

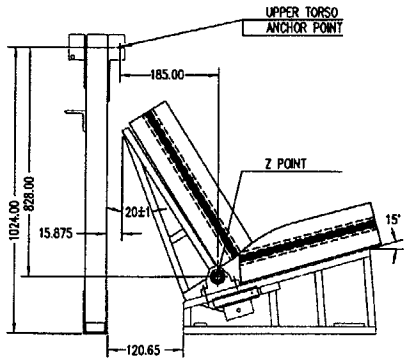

SIDE VIEW

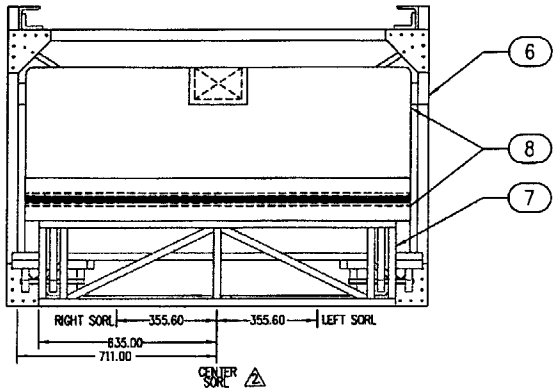

FRONT VIEW

1 ASSEMBLY

NOTES

1. ALL DIMENSIONS ARE IN METRIC (MM). DRAWING IS NOT DRAWN TO SCALE.
2. (SORL) – SEATING ORIENTATION REFERENCE LINE. (HORIZONTAL)
3. ADDITIONAL INFORMATION ON BAR ASSEMBLY 6 CAN BE OBTAINED FROM NAVAL AIR WARFARE CENTER, BLDG 2187, SUITE 1280-A9, 48110 SHAW ROAD, PATUXENT RIVER MD 20670-1906.

FIND NO.	NEXT ASSEMBLY	QTY REQD	PART NUMBER	DESCRIPTION	MATERIAL	MATERIAL SPECIFICATION	NOTE
8	2003HA100-1	1	2003HA300-1	CUSHION ASSEMBLY			
7	2003HA100-1	1	2003HA200-1	FRAME ASSEMBLY			
6	2003HA100-1	1	2003HA100-6	BAR ASSEMBLY,			3
5							
4							
3							
2							
1		1	2003HA100-1	SEAT ASSEMBLY			

PARTS LIST

DISTRIBUTION STATEMENT A:
APPROVED FOR PUBLIC RELEASE;
DISTRIBUTION IS UNLIMITED.

NEXT ASSY	USED ON
APPLICATION	

INTERPRET DRAWING IAW MIL-STD-100
UNLESS OTHERWISE SPECIFIED DIMENSIONS ARE IN MM
TOLERANCES SHALL NOT BE CUMULATIVE
0 TO 12.7MM ± 0.79MM
12.7 TO 25.4MM ± 1.588MM
25.4MM TO 127MM ± 3.175MM
127MM TO 254MM ± 6.35
REMOVE ALL BURRS. BREAK SHARP EDGES .1270MM -.38100MM

NAVAL AIR WARFARE CENTER
AIRCRAFT DIVISION/PATUXENT RIVER
HUMAN SYSTEMS ENGINEERING DEPT.(4.6.7.2)

		DATE
DRAFTSMAN	J. SIWINSKI	14MAY03
CHECKER	B. HARVEY	14MAY03
PROJECT ENGINEER	TOYA BARROS	14MAY03
PROJECT LEAD SCIENTIST/ SYSTEM ENGINEER	WILLIAM GLASS	14MAY03

DEPARTMENT OF THE NAVY
NAVAL AIR SYSTEMS COMMAND
PATUXENT RIVER, MD 20670-1628

SEAT ASSEMBLY
NHTSA SEAT

SIZE	CAGE NO.	NAVAIR DWG. NO.	REV.
D	30003	2003HA100	
SCALE NONE	SEE 2002-21	SHEET 1 OF 2	

CAD MAINTAINED. CHANGES SHALL BE INCORPORATED BY THE DESIGN ACTIVITY.

2003HA100

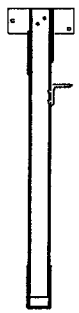

SIDE VIEW

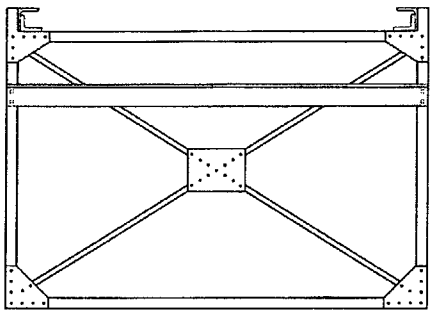

BACK VIEW

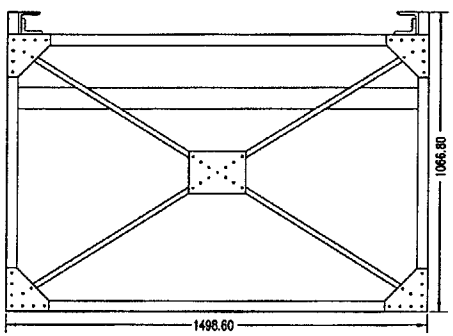

FRONT VIEW

6 ASSEMBLY

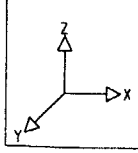

REVISIONS

ZONE	LTR	DESCRIPTION	DATE	APPROVED

CAD MAINTAINED. CHANGES SHALL BE INCORPORATED BY THE DESIGN ACTIVITY.

DISTRIBUTION STATEMENT A: APPROVED FOR PUBLIC RELEASE; DISTRIBUTION IS UNLIMITED.

NAVAL AIR DEVELOPMENT CENTER
AIRCRAFT DIVISION/PATUXENT RIVER
HUMAN SYSTEMS ENGINEERING DEPT (4.6.7.3)

DRAWN	J SIWINSKI	SIZE D	CAGE NO. 30003	NAVAIR DWG. NO. 2003HA100
CHECKED	B HARVEY	SCALE NONE		SHEET 2 OF 2

2003HA100

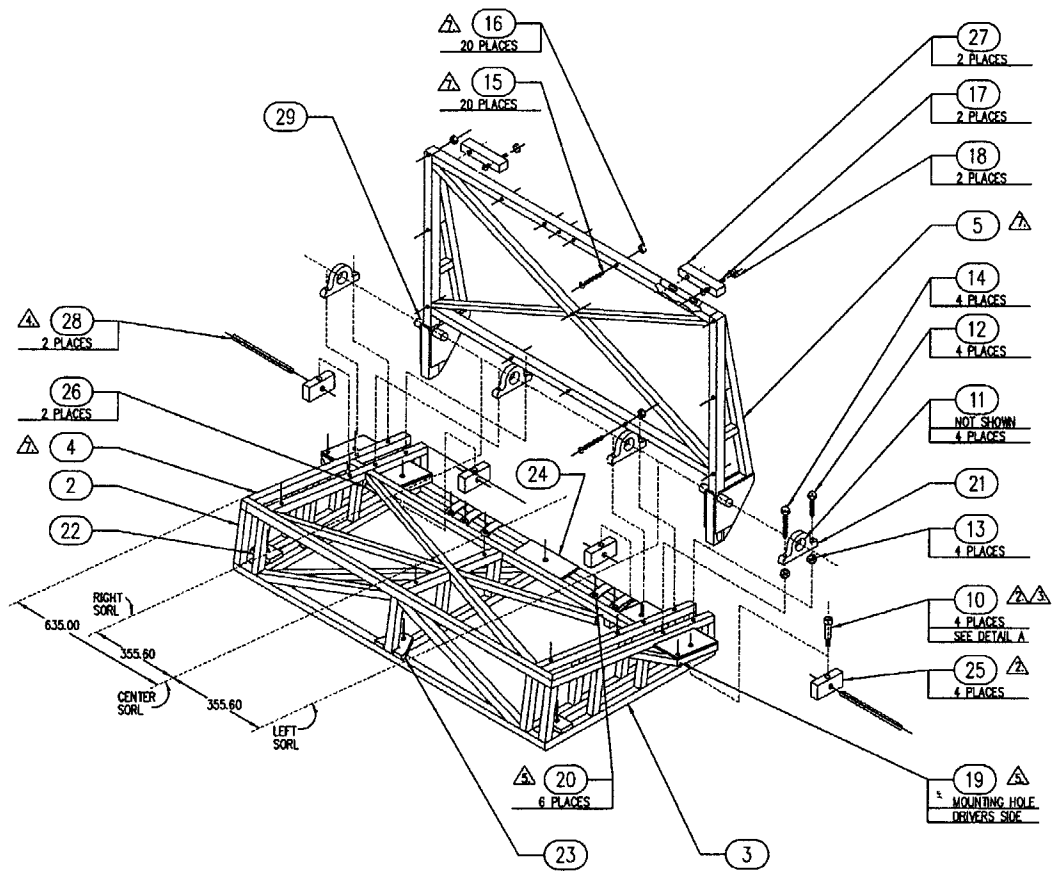

1 ASSEMBLY

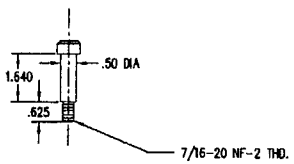

10 DETAIL A

REVISIONS				
ZONE	LTR	DESCRIPTION	DATE	APPROVED

NOTES:

1. ALL DIMENSIONS ARE IN METRIC (MM) EXCEPT FOR PARTS, DIAMETERS, AND WELDS, WHICH ARE IN INCHES. DRAWING IS NOT DRAWN TO SCALE.
2. PIVOT BLOCK (25) SHOULD BE FREE TO ROTATE WITH SHOULDER BOLT (10) INSTALLED.
3. SHOULDER BOLT (10) SHALL BE FABRICATED FROM 1/2 SOC. HD BOLT. SEE DETAIL A.
4. RIGID ROD (28) SHALL BE REPLACED AFTER EACH TEST.
5. USE OUTBOARD BELT ANCHOR BRACKET (19) MOUNTING HOLE (DRIVER'S SIDE) IN CONJUNCTION WITH INBOARD BELT ANCHOR BRACKET (20) (DRIVER'S SIDE) MOUNTING HOLE FOR DRIVER'S SEATING POSITION BELT ATTACHMENT. SYMMETRICALLY OPPOSITE BELT ANCHOR MOUNTING HOLES AVAILABLE FOR PASSENGER'S SEATING POSITION BELT ATTACHMENT.
6. (SORL) – SEATING ORIENTATION REFERENCE LINE. (HORIZONTAL)
7. ROUND HD SCREW (15) AND HEX HD NUT (16) SHALL BE ASSEMBLED TO FRAME, TOP ASSEMBLY (4) AND FRAME BACK ASSEMBLY (5) BEFORE CUSHION INSTALLATIONS IN 20 PLACES.
8. USE 125% SAFETY FACTOR FOR ALL WELDS, ELECTRIC WELD WITH 3/32 FLEETWOOD 3T ROD. WELD ALL PLACES POSSIBLE AT JUNCTIONS OF TUBE AND PLATES. WELDED ASSEMBLIES MAY BE PAINTED FOR APPEARANCE AND CORROSION PREVENTION.
9. GRIND WELDS FLUSH ON TOP AND BOTTOM SURFACES OF SEAT BASE WELDMENT.
10. ADDITIONAL INFORMATION FOR PARTS ON SHEET 2 CAN BE OBTAINED FROM NAVAL AIR WARFARE CENTER, BLDG 2187, SUITE 1280-A 9, 48110 SHAW ROAD, PATUXENT RIVER MD 20670-1906.

FIND NO.	NEXT ASSEMBLY	QTY REQD	PART NUMBER	DESCRIPTION	MATERIAL	MATERIAL SPECIFICATION	NOTE
29	2003HA200-1	2	2003HA205-17	ROD	STEEL		5
28	2003HA200-1	AR	2003HA200-28	RIGID ROD	STEEL	1045	4
27	2003HA200-1	2	2003HA200-27	DYNAMIC TUNING BLOCK	STEEL		
26	2003HA200-3	2	2003HA200-26	SEAT ANCHOR, BACK	STEEL		
25	2003HA200-1	4	2003HA200-25	PIVOT BLOCK	STEEL		2
24	2003HA202-1	1	2003HA200-24	STEEL PLATE	STEEL		
23	2003HA202-1	1	2003HA200-23	GUSSET	STEEL		
22	2003HA202-1	2	2003HA200-22	SEAT ANCHOR FRONT	STEEL		
21	2003HA200-1	4	2003HA200-21	PILLOW BLOCK	STEEL		
20	2003HA202-1	6	2003HA200-20	INBOARD BELT ANCHOR BRACKET	STEEL	1/4 X 1-1/4 X 3-1/4	5
19	2003HA200-1	2	2003HA200-19	OUTBOARD BELT ANCHOR BRACKET	STEEL	2 X 2 X 2.25 X 3	
18	2003HA200-1	4	2003HA200-18	HEX NUT		1/4-28 NF-2	
17	2003HA200-1	4	2003HA200-17	ROUND HD SCREW		1/4-28 NF-2-1-1/2 LG	
16	2003HA200-1	20	2003HA200-16	HEX HD NUT		1/4-20 NC-2	7
15	2003HA200-1	20	2003HA200-15	ROUND HD SCREW		1/4-20 NC-2 X 2	7
14	2003HA200-1	4	2003HA200-14	HEX HD BOLT		3/8-16 NC-2 X 3-1/2 LG	
13	2003HA200-1	4	2003HA200-13	HEX NUT		3/8-16 NC-2	
12	2003HA200-1	4	2003HA200-12	HEX HD BOLT		3/8-16 NC-2 X 2-1/2 LG	
11	2003HA200-1	4	2003HA200-11	BEARING		MORSE SPHERE CO. #BH16-LS	
10	2003HA200-1	4	2003HA200-10	SHOULDER BOLT		1/2 SOC. HD BOLT	2 3
9							
8							
7							
6							
5	2003HA200-1	1	2003HA205-1	FRAME, BACK, ASSEMBLY			7
4	2003HA200-1	1	2003HA203-1	FRAME, TOP, ASSEMBLY			7
3	2003HA200-1	1	2003HA202-1	FRAME, BOTTOM, ASSEMBLY			
2	2003HA200-1	1EA	2003HA201-2	FRAME, FRONT & SIDE ASSEMBLY			
1	2003HA100-1	1	2003HA200-1	FRAME, ASSEMBLY			

PARTS LIST

DISTRIBUTION STATEMENT A:
APPROVED FOR PUBLIC RELEASE;
DISTRIBUTION IS UNLIMITED.

NEXT ASSY	USED ON

APPLICATION

CAD MAINTAINED. CHANGES SHALL BE INCORPORATED BY THE DESIGN ACTIVITY.

INTERPRET DRAWING IAW MIL-STD-100

UNLESS OTHERWISE SPECIFIED DIMENSIONS ARE IN MM AND INCHES
TOLERANCES SHALL NOT BE CUMULATIVE
MM
0 TO 15.9MM ± 0.79MM
15.7 TO 25.4MM ± 1.20MM
25.4MM TO 127MM ± 2.175MM
127MM TO 254MM ± 4.35
FRACTIONS
0 TO 1/2 ± 1/32
1/2 TO 1 INCL ± 1/16
1 TO 5 INCL ± 1/8
5 TO 10 INCL ± 1/4

REMOVE ALL BURRS BREAK SHARP EDGES .127MM - .381MM
SHARP EDGES .381 - .254 INCHES

NAVAL AIR WARFARE CENTER
AIRCRAFT DIVISION/PATUXENT RIVER
HUMAN SYSTEMS ENGINEERING DEPT. (4.8.7.2)

		DATE
DRAFTSMAN	J. SIWINSKI	14MAY03
CHECKED	B. HARVEY	14MAY03
PROJECT ENGINEER	TOYA BARROS	14MAY03
PROJECT TEAM LEADER/ SYSTEM ENGINEER	WILLIAM GLASS	14MAY03

DEPARTMENT OF THE NAVY
NAVAL AIR SYSTEMS COMMAND
PATUXENT RIVER, MD 20670-1628

FRAME ASSEMBLY
NHTSA SEAT

SIZE	CAGE NO.	NAVAIR DWG. NO.	REV.
D	30003	2003HA200	

SCALE NONE | SEE 2002-21 | SHEET 1 OF 2

2003HA200

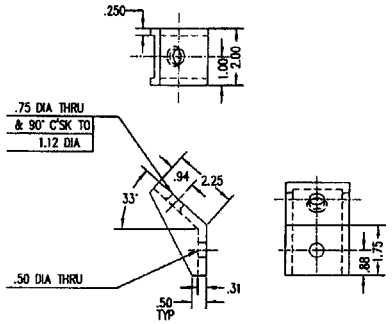

(19) OUTBOARD BELT ANCHOR BRACKET

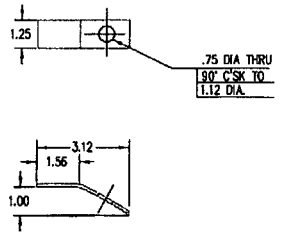

(20) INBOARD BELT ANCHOR BRACKET

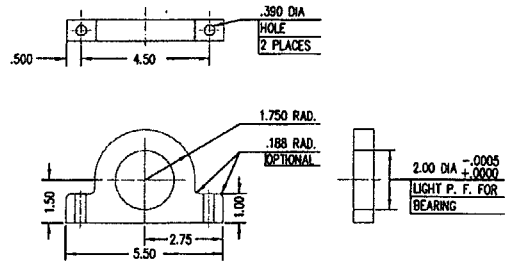

(21) PILLOW BLOCK

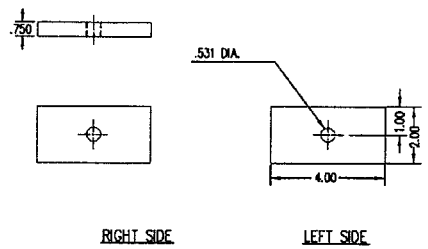

(22) SEAT ANCHOR FRONT

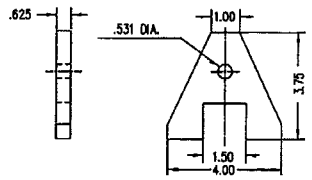

(23) GUSSET

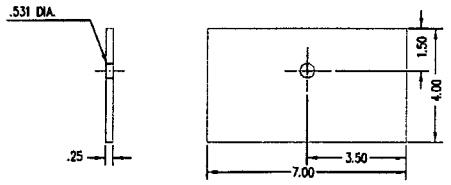

(24) STEEL PLATE

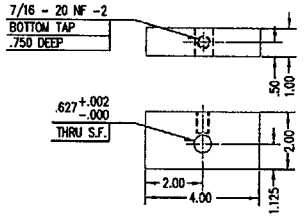

(15) PIVOT BLOCK

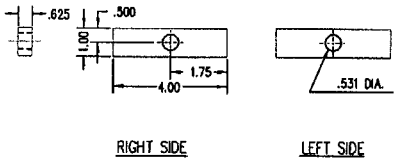

(26) SEAT ANCHOR BACK

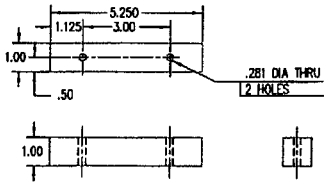

(27) DYNAMIC TUNING BLOCK

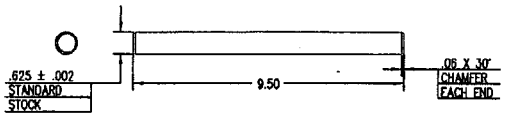

(28) RIGID ROD

Z
X
Y

NOTE
ALL DIMENSIONS ARE IN INCHES ON THIS SHEET.
DRAWING IS NOT DRAWN TO SCALE.

CAD MAINTAINED. CHANGES SHALL BE INCORPORATED BY THE DESIGN ACTIVITY.

DISTRIBUTION STATEMENT A:
APPROVED FOR PUBLIC RELEASE;
DISTRIBUTION IS UNLIMITED.

NAVAL AIR DEVELOPMENT CENTER AIRCRAFT DIVISION/PATUXENT RIVER HUMAN SYSTEMS ENGINEERING DEPT (4.8.3.2)			
DRAWN	J SWINSKI	SIZE D	CAGE NO. 30003
CHECKED	B HARVEY	SCALE NONE	NAVAIR DWG NO. 2003HA200
			SHEET 2 OF 2

2003HA200

REVISIONS				
ZONE	LTR	DESCRIPTION	DATE	APPROVED

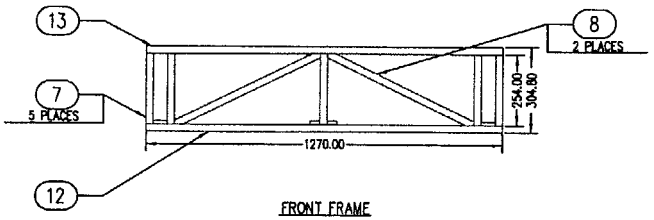

FRONT FRAME

1 ASSEMBLY

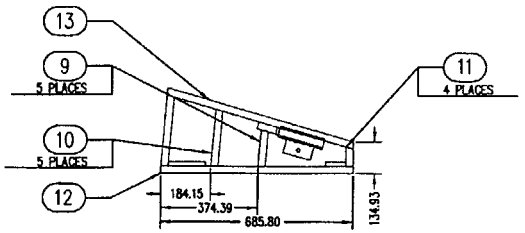

SIDE FRAME
R.H. SHOWN L.H. OPPOSITE

2 ASSEMBLY

NOTES:

1. ALL DIMENSIONS ARE IN METRIC (MM) EXCEPT FOR WELDS, WHICH ARE IN INCHES. DRAWING IS NOT DRAWN TO SCALE.
2. USE 125% SAFETY FACTOR FOR ALL WELDS, ELECTRIC WELD WITH 3/32 FLEETWOOD 3T ROD. WELD ALL PLACES POSSIBLE AT JUNCTIONS OF TUBE AND PLATES. WELDED ASSEMBLIES MAY BE PAINTED FOR APPEARANCE AND CORROSION PREVENTION.
3. GRIND WELDS FLUSH ON TOP AND BOTTOM SURFACES OF SEAT BASE WELDMENT.

FIND NO.	NEXT ASSEMBLY	QTY REQD	PART NUMBER	DESCRIPTION	MATERIAL	MATERIAL SPECIFICATION	NOTE
13	2003HA201-1	1	2003HA203-1	FRAME, TOP ASSEMBLY			
12	2003HA201-1	1	2003HA202-1	FRAME, BOTTOM ASSEMBLY			
11	2003HA201-1	4	2003HA201-12	TUBING	STEEL	15GA, 1 SQ, CUT LG = 92.07 MM	
10	2003HA201-1	5	2003HA201-11	TUBING	STEEL	15GA, 1 SQ, CUT LG = 165.10 MM	
9	2003HA201-1	5	2003HA201-10	TUBING	STEEL	15GA, 1 SQ, CUT LG = 139.70 MM	
8	2003HA201-1	2	2003HA201-8	TUBING	STEEL	15GA, 1 SQ, CUT LG = 558.80 MM	
7	2003HA201-1	5	2003HA201-7	TUBING	STEEL	15GA, 1 SQ, CUT LG = 254.00 MM	
6							
5							
4							
3							
2	2003HA200-1	2	2003HA201-2	FRAME, SIDE ASSEMBLY			
1	2003HA200-1	1	2003HA201-1	FRAME, FRONT ASSEMBLY			

PARTS LIST

DISTRIBUTION STATEMENT A:
APPROVED FOR PUBLIC RELEASE;
DISTRIBUTION IS UNLIMITED.

NEXT ASSY	USED ON

APPLICATION

INTERPRET DRAWING IAW MIL-STD-100
UNLESS OTHERWISE SPECIFIED DIMENSIONS ARE IN MM
TOLERANCES SHALL NOT BE CUMULATIVE
0 TO 12.7MM ± 0.79MM
12.7 TO 25.4MM ± 1.588MM
25.4MM TO 127MM ± 3.175MM
127MM TO 254MM ± 6.35
REMOVE ALL BURRS BREAK SHARP EDGES .127000MM -.381000MM

NAVAL AIR WARFARE CENTER AIRCRAFT DIVISION/PATUXENT RIVER
HUMAN SYSTEMS ENGINEERING DEPT.(4.8.7.3)

DRAFTSMAN	J. SIWINSKI	DATE 7MAY03
ENGINEER	B. HARVEY	7MAY03
PROJECT ENGINEER	TOYA BARROS	7MAY03
PROJECT TECH LEADER/ SYSTEM ENGINEER	WILLIAM GLASS	7MAY03

DEPARTMENT OF THE NAVY
NAVAL AIR SYSTEMS COMMAND
PATUXENT RIVER, MD 20670-1620

FRAME,
FRONT AND SIDE ASSEMBLY
NHTSA SEAT

SIZE	CAGE NO.	NAVAIR DWG. NO.	REV.
D	30003	2003HA201	
SCALE NONE	SEE 2002-21	SHEET 1 OF 1	

2003HA201

CAD MAINTAINED. CHANGES SHALL BE INCORPORATED BY THE DESIGN ACTIVITY.

REVISIONS				
ZONE	LTR	DESCRIPTION	DATE	APPROVED

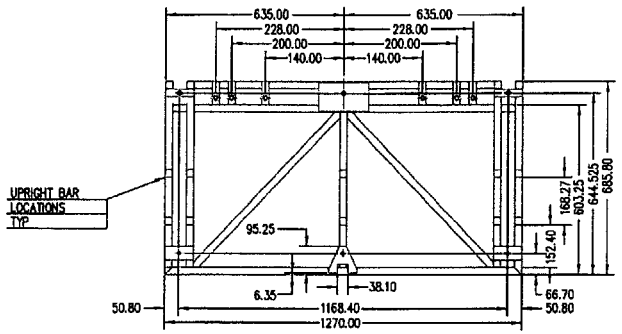

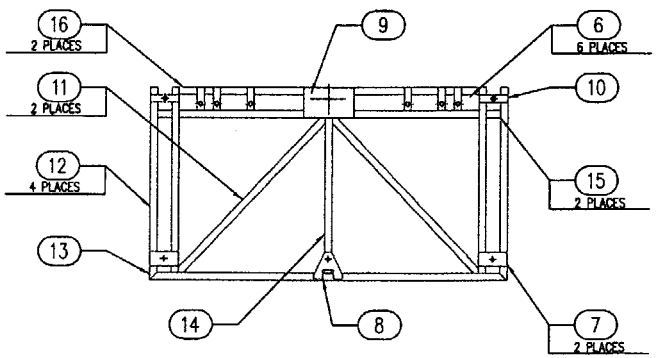

BOTTOM VIEW

(1) ASSEMBLY

NOTES:

1. ALL DIMENSIONS ARE IN METRIC (MM) EXCEPT FOR PARTS, DIAMETERS, AND WELDS, WHICH ARE IN INCHES. DRAWING IS NOT DRAWN TO SCALE.
2. USE 125% SAFETY FACTOR FOR ALL WELDS, ELECTRIC WELD WITH 3/32 FLEETWOOD 3T ROD. WELD ALL PLACES POSSIBLE AT JUNCTIONS OF TUBE AND PLATES. WELDED ASSEMBLIES MAY BE PAINTED FOR APPEARANCE AND CORROSION PREVENTION.
3. GRIND WELDS FLUSH ON TOP AND BOTTOM SURFACES OF SEAT BASE WELDMENT.

FIND NO.	NEXT ASSEMBLY	QTY REQD	PART NUMBER	DESCRIPTION	MATERIAL	MATERIAL SPECIFICATION	NOTE
16	2003HA202-1	2	2003HA202-16	TUBING	STEEL	15GA, 1 SQ, CUT LG = 1066.80MM	
15	2003HA202-1	2	2003HA202-15	TUBING	STEEL	15GA, 1 SQ, CUT LG = 50.80MM	
14	2003HA202-1	1	2003HA202-14	TUBING	STEEL	15GA, 1 SQ, CUT LG = 552.45MM	
13	2003HA202-1	1	2003HA202-13	TUBING	STEEL	15GA, 1 SQ, CUT LG = 1270.00MM	
12	2003HA202-1	4	2003HA202-12	TUBING	STEEL	15GA, 1 SQ, CUT LG = 685.80MM	
11	2003HA202-1	2	2003HA202-11	TUBING	STEEL	15GA, 1 SQ, CUT LG = 762.00MM	
10	2003HA202-1	2	2003HA200-24	SEAT ANCHOR BACK			
9	2003HA202-1	1	2003HA200-22	STEEL PLATE			
8	2003HA202-1	1	2003HA200-21	GUSSET			
7	2003HA202-1	2	2003HA200-20	SEAT ANCHOR FRONT			
6	2003HA202-1	2	2003HA200-18	INBOARD BELT ANCHOR BRACKET			
5							
4							
3							
2							
1	2003HA200-1	1	2003HA202-1	FRAME, BOTTOM ASSEMBLY			

PARTS LIST

DISTRIBUTION STATEMENT A: APPROVED FOR PUBLIC RELEASE; DISTRIBUTION IS UNLIMITED.

NEXT ASSY	USED ON
APPLICATION	

CAD MAINTAINED. CHANGES SHALL BE INCORPORATED BY THE DESIGN ACTIVITY.

INTERPRET DRAWING IAW MIL-STD-100

UNLESS OTHERWISE SPECIFIED DIMENSIONS ARE IN MM

TOLERANCES SHALL NOT BE CUMULATIVE

0 TO 12.7MM ± 0.75MM
12.7 TO 25.4MM ± 1.56MM
25.4MM TO 127MM ± 3.175MM
127MM TO 254MM ± 6.35

REMOVE ALL BURRS. BREAK SHARP EDGES .127000MM – .381000MM

NAVAL AIR WARFARE CENTER AIRCRAFT DIVISION/PATUXENT RIVER HUMAN SYSTEMS ENGINEERING DEPT. (4.8.7.2)

DRAFTSMAN	J. SIWINSKI	14MAY03
DESIGNER	B. HARVEY	14MAY03
PROJECT MANAGER	TOYA BARROS	14MAY03
PROJECT ENGINEER/ DESIGN MANAGER	WILLIAM GLASS	14MAY03

DEPARTMENT OF THE NAVY
NAVAL AIR SYSTEMS COMMAND
PATUXENT RIVER, MD 20670-1928

FRAME,
BOTTOM ASSEMBLY
NHTSA SEAT

SIZE	CAGE NO.	NAVWAR DWG. NO.	REV.
D	30003	2003HA202	
SCALE NONE	SEE 2002-21	SHEET 1 OF 1	

2003HA202

REVISIONS				
ZONE	LTR	DESCRIPTION	DATE	APPROVED

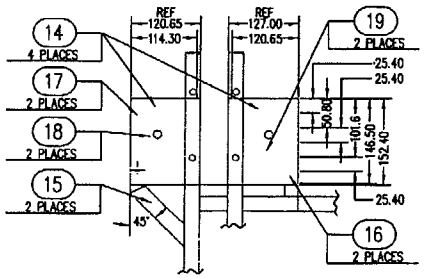

TOP VIEW

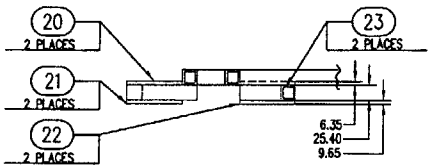

FRONT VIEW

DETAIL B

RIGHT SHOWN LEFT OPPSITE

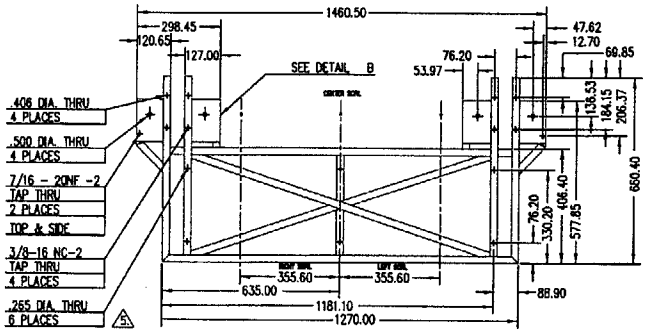

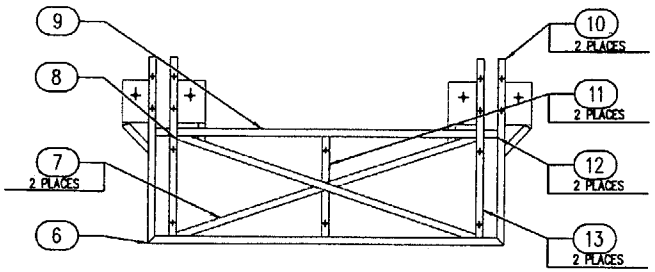

TOP VIEW

(1) ASSEMBLY

NOTES:

1. ALL DIMENSIONS ARE IN METRIC (MM) EXCEPT FOR PARTS, DIAMETERS, AND WELDS, WHICH ARE IN INCHES. DRAWING IS NOT DRAWN TO SCALE.
2. USE 125% SAFETY FACTOR FOR ALL WELDS, ELECTRIC WELD WITH 3/32 FLEETWOOD 3T ROD. WELD ALL PLACES POSSIBLE AT JUNCTIONS OF TUBE AND PLATES. WELDED ASSEMBLIES MAY BE PAINTED FOR APPEARANCE AND CORROSION PREVENTION.
3. GRIND WELDS FLUSH ON TOP AND BOTTOM SURFACES OF SEAT BASE WELDMENT.
4. (SORL) – SEATING ORIENTATION REFERENCE LINE. (HORIZONTAL)
5. (6) THRU .265 DIA HOLES SHALL BE DRILLED IN FRAME, TOP ASSEMBLY (1) FOR ATTACHMENT OF CUSHION, SEAT ASSEMBLY 2003HA301-1

FIND NO.	NEXT ASSEMBLY	QTY REQD	PART NUMBER	DESCRIPTION	MATERIAL	MATERIAL SPECIFICATION	NOTE
23	2003HA203-1	2	2003HA203-23	PLATE	STEEL	1/4 X 4 X 6 IN	
22	2003HA203-1	2	2003HA203-22	PLATE	STEEL	3/8 X 5 X 5.75 IN	
21	2003HA203-1	2	2003HA203-21	PLATE	STEEL	3/8 X 4.75 X 6 IN	
20	2003HA203-1	2	2003HA203-20	PLATE	STEEL	1/4 X 3.75 X 6 IN	
19	2003HA203-1	2	2003HA203-19	BAR	STEEL	1 X 1, CUT LG = 101.60 MM	
18	2003HA203-1	2	2003HA203-18	BAR	STEEL	1 X 1, CUT LG = 95.25 MM	
17	2003HA203-1	2	2003HA203-17	BAR	STEEL	1 X 1, CUT LG = 165.10 MM	
16	2003HA203-1	2	2003HA203-16	TUBING	STEEL	15GA, 1 SQ, CUT LG = 247.65 MM	
15	2003HA203-1	2	2003HA203-15	TUBING	STEEL	15GA, 1 SQ, CUT LG = 171.45 MM	
14	2003HA203-1	8	2003HA203-14	TUBING	STEEL	15GA, 1 SQ, CUT LG = 95.25 MM	
13	2003HA203-1	2	2003HA203-13	TUBING	STEEL	15GA, 1 SQ, CUT LG = 635.00 MM	
12	2003HA203-1	2	2003HA203-12	TUBING	STEEL	15GA, 1 SQ, CUT LG = 50.80 MM	
11	2003HA203-1	2	2003HA203-11	TUBING	STEEL	15GA, 1 SQ, CUT LG = 165.10 MM	
10	2003HA203-1	4	2003HA203-10	TUBING	STEEL	15GA, 1 SQ, CUT LG = 660.40 MM	
9	2003HA203-1	1	2003HA203-9	TUBING	STEEL	15GA, 1 SQ, CUT LG = 1066.80 MM	
8	2003HA203-1	1	2003HA203-8	TUBING	STEEL	15GA, 1 SQ, CUT LG = 1130.30 MM	
7	2003HA203-1	2	2003HA203-7	TUBING	STEEL	15GA, 1 SQ, CUT LG = 558.80 MM	
6	2003HA203-1	1	2003HA203-6	TUBING	STEEL	15GA, 1 SQ, CUT LG = 1270.00 MM	
5							
4							
3							
2							
1	2003HA200-1	1	2003HA203-1	FRAME, SEAT TOP, ASSEMBLY			5.

PARTS LIST

DISTRIBUTION STATEMENT A:
APPROVED FOR PUBLIC RELEASE;
DISTRIBUTION IS UNLIMITED.

NEXT ASSY	USED ON
APPLICATION	

INTERPRET DRAWING IAW MIL-STD-100

UNLESS OTHERWISE SPECIFIED DIMENSIONS ARE IN MM

TOLERANCES SHALL NOT BE CUMULATIVE

0 TO 12.7MM ± 0.79MM
12.7 TO 25.4MM ± 1.58MM
25.4MM TO 127MM ± 3.175MM
127MM TO 254MM ± 6.35

REMOVE ALL BURRS. BREAK SHARP EDGES .127MM -.381MM

CAD MAINTAINED. CHANGES SHALL BE INCORPORATED BY THE DESIGN ACTIVITY.

NAVAL AIR WARFARE CENTER AIRCRAFT DIVISION/PATUXENT RIVER
HUMAN SYSTEMS ENGINEERING DEPT. (4.6.7.2)

		DATE
DRAFTSMAN	J. SWINSKI	7MAY03
DESIGNER	B. HARVEY	7MAY03
PROJECT ENGINEER	TOYA BARROS	7MAY03
PROJECT TEAM LEADER/ SECTION ENGINEER	WILLIAM GLASS	7MAY03

DEPARTMENT OF THE NAVY
NAVAL AIR SYSTEMS COMMAND
PATUXENT RIVER, MD 20670-1626

FRAME, TOP ASSEMBLY
NHTSA SEAT

SIZE	CAGE NO.	NAVAIR DWG. NO.	REV.
D	30003	2003HA203	
SCALE NONE	SEE 2002-21	SHEET 1 OF 1	

2003HA203

REVISIONS				
ZONE	LTR	DESCRIPTION	DATE	APPROVED

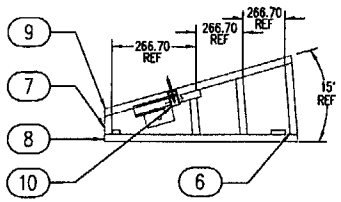

SIDE VIEW

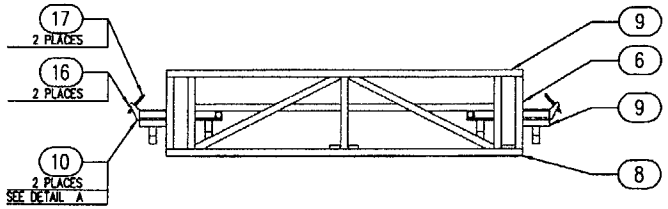

FRONT VIEW

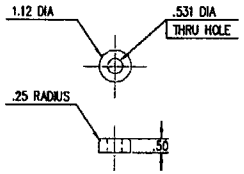

16 NUT

17 ROD

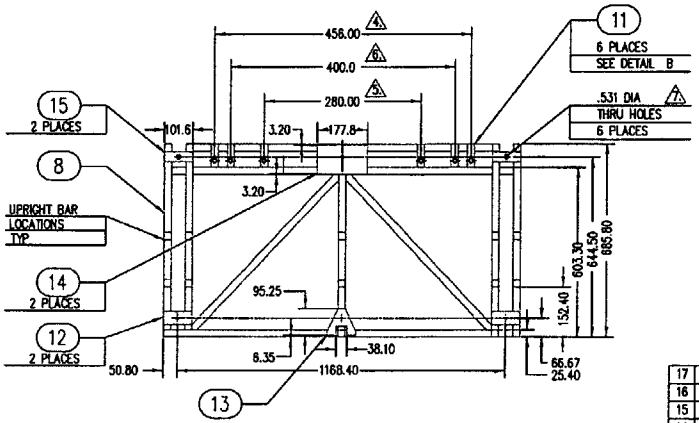

BOTTOM VIEW

1 ASSEMBLY

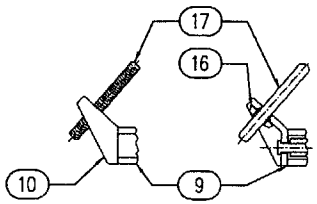

DETAIL A

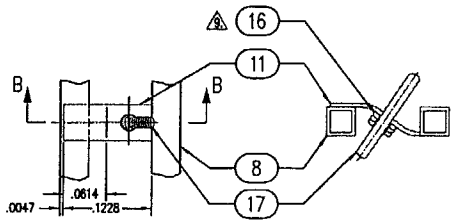

DETAIL B

11 WITH ROD ASSEMBLY

NOTES:

1. ALL DIMENSIONS ARE IN METRIC (MM) EXCEPT FOR PARTS, DIAMETERS, AND WELDS, WHICH ARE IN INCHES. DRAWING IS NOT DRAWN TO SCALE.
2. USE 125% SAFETY FACTOR FOR ALL WELDS, ELECTRIC WELD WITH 3/32 FLEETWOOD 3T ROD. WELD ALL PLACES POSSIBLE AT JUNCTIONS OF TUBE AND PLATES. WELDED ASSEMBLIES MAY BE PAINTED FOR APPEARANCE AND CORROSION PREVENTION.
3. GRIND WELDS FLUSH ON TOP AND BOTTOM SURFACES OF SEAT BASE WELDMENT.
4. INBOARD BELT ANCHOR HOLES TO BE USED FOR 3-PT BELT SYSTEMS ANCHORS LOCATED 173MM UPWARD FROM AND 119MM FORWARD OF POINT Z, MAXIMUM DISTANCE FROM SEAT BIGHT TO END OF BUCKLE IS 175MM.
5. LOWER UNIVERSAL ANCHOR BARS
   ø6MM
   25MM LENGTH
   LOCATED 102M FORWARD OF POINT Z AND 279MM UPWARD FROM FLOOR.
6. INBOARD BELT ANCHOR (11) HOLES TO BE USED FOR CENTER SEATING POSITION BELT ATTACHMENT.
7. .531 DIA HOLES (6) PLACES FOR SEAT BASE ATTACHMENT TO TEST FIXTURE.
8. 1/2 THREADED ROD (17) IS RECOMMENDED WITH BELT CLEVIS AND HEX NUT (16) TO SIMPLIFY BELT TENSIONING ADJUSTMENT AT BOTH INBOARD AND OUTBOARD BELT ANCHORS.
9. (2) NUTS (16) ARE REQUIRED TO BE USED WITH INBOARD BELT ANCHOR, BRACKET (11). IF THE OUTBOARD BELT ANCHOR, BRACKET 10 , IS USED, (2) MORE NUTS (16) ARE REQUIRED.

FIND NO.	NEXT ASSEMBLY	QTY REQD	PART NUMBER	DESCRIPTION	MATERIAL	MATERIAL SPECIFICATION	NOTE
17	2003HA204-1	AR	2003HA204-17	ROD		THREADED ROD, 1/2 DIA	8
16	2003HA204-1	2	2003HA204-16	NUT	STEEL	1-1/8 DIA X 1/2 TK.	8, 9
15	2003HA204-1	2	2003HA200-26	SEAT ANCHOR, BACK			7
14	2003HA204-1	1	2003HA200-24	STEEL PLATE			7
13	2003HA204-1	1	2003HA200-23	GUSSET			7
12	2003HA204-1	2	2003HA200-22	SEAT ANCHOR, FRONT			7
11	2003HA204-1	6	2003HA200-20	INBOARD BELT ANCHOR, BRACKET			4, 5, 6, 7, 8, 9
10	2003HA204-1	2	2003HA200-19	OUTBOARD BELT ANCHOR, BRACKET			
9	2003HA204-1	1	2003HA203-1	FRAME, SEAT TOP, ASSEMBLY			
8	2003HA204-1	1	2003HA202-1	FRAME, BOTTOM ASSEMBLY			
7	2003HA204-1	1	2003HA201-2	FRAME, SIDE ASSEMBLY			
6	2003HA204-1	1	2003HA201-1	FRAME, FRONT ASSEMBLY			
5							
4							
3							
2							
1	2003HA200-1	1	2003HA204-1	ANCHOR POINTS ASSEMBLY			

PARTS LIST

2003HA204

CAD MAINTAINED. CHANGES SHALL BE INCORPORATED BY THE DESIGN ACTIVITY.

DISTRIBUTION STATEMENT A: APPROVED FOR PUBLIC RELEASE; DISTRIBUTION IS UNLIMITED.

NEXT ASSY	USED ON
APPLICATION	

INTERPRET DRAWING IAW MIL-STD-100

UNLESS OTHERWISE SPECIFIED DIMENSIONS ARE IN MM

TOLERANCES SHALL NOT BE CUMULATIVE

0 TO 12.7MM ± 0.79MM
12.7 TO 25.4MM ± 1.58MM
25.4MM TO 127MM ± 3.175MM
127MM TO 254MM ± 6.35

REMOVE ALL BURRS. BREAK SHARP EDGES .127000M - .203000M

NAVAL AIR WARFARE CENTER AIRCRAFT DIVISION/PATUXENT RIVER HUMAN SYSTEM ENGINEERING DEPT. (4.4)

DRAFTSMAN	J. SWINSKI	14MAY03
DESIGNER	B. HARVEY	14MAY03
PROJECT ENGINEER	TOYA BARROS	14MAY03
PROJECT TEST LEADER/ TEAM LEADER	WILLIAM GLASS	14MAY03

DEPARTMENT OF THE NAVY
NAVAL AIR SYSTEMS COMMAND
PATUXENT RIVER, MD 20670-1628

ANCHOR POINTS ASSEMBLY
NHTSA SEAT

SIZE	CAGE NO.	NAVAIR DWG. NO.	REV.
D	30003	2003HA204	

SCALE NONE | SEE 2002-21 | SHEET 1 OF 1

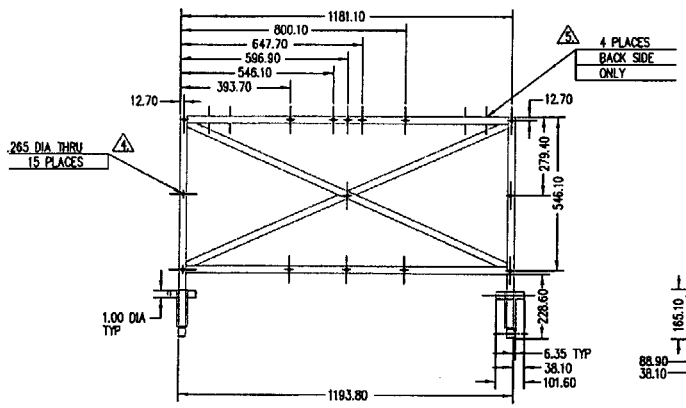

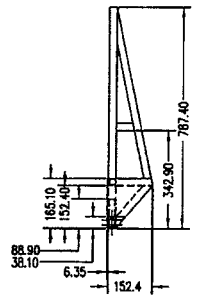

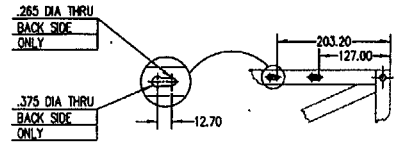

DETAIL B
TYPICAL EACH END

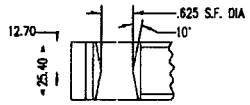

SECTION A – A

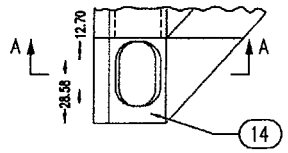

DETAIL A
LEFT SIDE SHOWN RIGHT SIDE OPPOSITE

NOTES:

1. ALL DIMENSIONS ARE IN METRIC (MM) EXCEPT FOR PARTS, DIAMETERS, AND WELDS, WHICH ARE IN INCHES. DRAWING IS NOT DRAWN TO SCALE.
2. USE 125% SAFETY FACTOR FOR ALL WELDS. ELECTRIC WELD WITH 3/32 FLEETWOOD 3T ROD. WELD ALL PLACES POSSIBLE AT JUNCTIONS OF TUBE AND PLATES. WELDED ASSEMBLIES MAY BE PAINTED FOR APPEARANCE AND CORROSION PREVENTION.
3. GRIND WELDS FLUSH ON TOP AND BOTTOM SURFACES OF SEAT BASE WELDMENT.

4. (15) .265 DIA. THRU HOLES SHALL BE DRILLED IN FRAME, BACK ASSEMBLY (1) FOR ATTACHMENT OF CUSHION, BACK ASSEMBLY 2003HA302-1.

5. (4) SLOTTED HOLES SHALL BE PLACED IN THE BACK OF FRAME, BACK ASSEMBLY (1) FOR ATTACHMENT OF DYNAMIC TUNING BLOCK 2003HA200-27. SEE DETAIL B ON THIS SHEET.

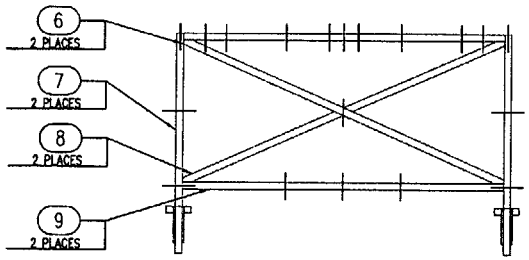

FRONT VIEWS

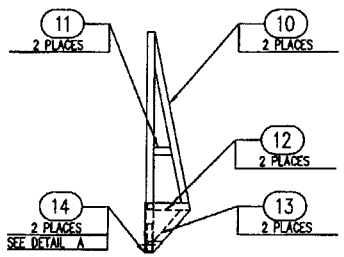

SIDE VIEWS

BOTTOM VIEW

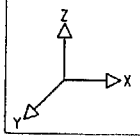

(1) ASSEMBLY

FIND NO.	NEXT ASSEMBLY	QTY REQD	PART NUMBER	DESCRIPTION	MATERIAL	MATERIAL SPECIFICATION	NOTE
17	2003HA205-1	2	2003HA205-17	ROD	STEEL	1 DIA LG = 4.00 IN	
16	2003HA205-1	2	2003HA205-16	PLATE	STEEL	1/4 X 5 X 6 IN	
15	2003HA205-1	2	2003HA205-15	PLATE	STEEL	1/4 X 1 X 6.50 IN	
14	2003HA205-1	2	2003HA205-14	BAR	STEEL	1 X 1, CUT LG = 88.90 MM	
13	2003HA205-1	2	2003HA205-13	TUBING	STEEL	15GA, 1 SQ, CUT LG = 196.85 MM	
12	2003HA205-1	2	2003HA205-12	TUBING	STEEL	15GA, 1 SQ, CUT LG = 127.00 MM	
11	2003HA205-1	2	2003HA205-11	TUBING	STEEL	15GA, 1 SQ, CUT LG = 69.85 MM	
10	2003HA205-1	2	2003HA205-10	TUBING	STEEL	15GA, 1 SQ, CUT LG = 641.35 MM	
9	2003HA205-1	2	2003HA205-9	TUBING	STEEL	15GA, 1 SQ, CUT LG = 1143.00 MM	
8	2003HA205-1	2	2003HA205-8	TUBING	STEEL	15GA, 1 SQ, CUT LG = 622.30 MM	
7	2003HA205-1	2	2003HA205-7	TUBING	STEEL	15GA, 1 SQ, CUT LG = 749.30 MM	
6	2003HA205-1	2	2003HA205-6	TUBING	STEEL	15GA, 1 SQ, CUT LG = 1278.35 MM	
5							
4							
3							
2							
1	2003HA200-1	1	2003HA205-1	FRAME, BACK ASSEMBLY			4, 5

PARTS LIST

DISTRIBUTION STATEMENT A:
APPROVED FOR PUBLIC RELEASE;
DISTRIBUTION IS UNLIMITED.

NEXT ASSY	USED ON
APPLICATION	

INTERPRET DRAWING IAW MIL-STD-100
UNLESS OTHERWISE SPECIFIED DIMENSIONS ARE IN MM
TOLERANCES SHALL NOT BE CUMULATIVE
0 TO 12.7MM ± 0.79MM
12.7 TO 25.4MM ± 1.58MM
25.4MM TO 127MM ± 3.175MM
127MM TO 254MM ± 6.35
REMOVE ALL BURRS, BREAK SHARP EDGES .127000MM –.38100MM

NAVAL AIR WARFARE CENTER AIRCRAFT DIVISION/PATUXENT RIVER HUMAN SYSTEMS ENGINEERING DIV'L. (4.4.7.2)

DRAFTSMAN	J. SIMINSKI	7MAY03
DESIGNER	B. HARVEY	7MAY03
PROJECT ENGINEER	TOYA BARROS	7MAY03
PROJECT TEAM LEADER/ PROJECT MANAGER	WILLIAM GLASS	7MAY03

DEPARTMENT OF THE NAVY
NAVAL AIR SYSTEMS COMMAND
PATUXENT RIVER, MD 20670-1628

FRAME, BACK ASSEMBLY
NHTSA SEAT

SIZE	CAGE NO.	NAVAIR DWG. NO.	REV.
D	30003	2003HA205	
SCALE NONE	SEE 2002-21	SHEET 1 OF 1	

CAD MAINTAINED. CHANGES SHALL BE INCORPORATED BY THE DESIGN ACTIVITY.

2003HA205

REVISIONS				
ZONE	REV	DESCRIPTION	DATE	APPROVED

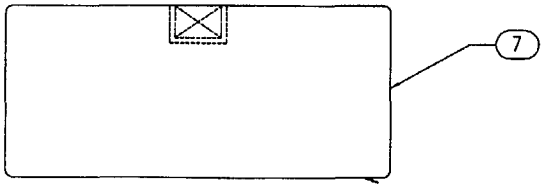

BACK FRONT VIEW

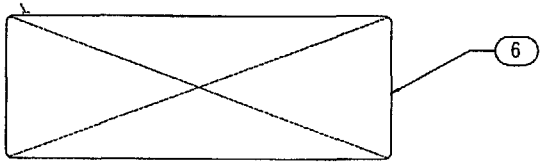

BASE TOP VIEW

(1) ASSEMBLY

NOTES

1. FOAM SHALL MEASURE 54 X 24 X 6. ONE OR TWO PIECES OF FOAM MAY BE USED TO ACHIEVE REQIRED DIMENSION.
2. TO BE SUITABLE FOR COMPLIANCE TESTING, FOAM INSERTS SHALL COMPRESS 25% UNDER THE FOLLOWING LOAD LIMITS:
   51MM (2 INCH) THICK FOAM:
   102MM (2 INCH) THICK FOAM:
3. SAMPLE SOURCE: UNITED FOAM CORPORATION, BREMAN, INDIANA
   FOAM A : THEIR FOAM # 202B 20.4 TO 24.9 KG (45 TO 55 LBS.)
   FOAM B : THEIR FOAM # 2021 9.5 TO 12.2 KG (21 TO 27 LBS.)

SPECIFICATIONS, SEATING FOAM POLYURETHANE		FOAM A	FOAM B
DESCRIPTION		EXTRA FIRM HIGH DENSITY GRADE	MEDIUM SOFT GRADE
DENSITY - PCF		2.70 ±.10	1.50 $^{+.05}_{-.10}$
*INDENT LOAD - LBS. - 4 THK @ 25% DEFLECTION.		45 - 55	21 - 27
INDENT LOAD RATIO (65/25) - MIN		2.0	1.9
TENSILE - PSI - MIN		12	12
ELONGATION - % - MIN		175	175
TEAR RESISTANCE - LBS/IN- MIN		1.75	1.75
COMPRESSION SET	METHOD B-ORIGINAL-50%-MAX	15.0	
	22 HRS. @ 58° F-90%-MAX		20.0
HUMIDITY AGED 5 HRS. @ 250° F	50% MAX	20.0	20.0
	90% MAX		20.0

* AS PER ASTM STANDARD D 2406-68 (METHOD B)

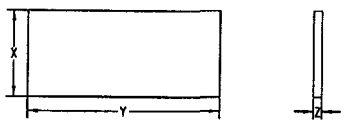

FOAM POSITION	FOAM TYPE	X	Y	Z
SEAT BACK LOWER (AGAINST PLYWOOD BACKING)	A	24	54	2
SEATBACK UPPER	B	24	54	4
SEAT BASE LOWER (AGAINST PLYWOOD BACKING)	A	20	54	2
SEAT BASE UPPER	B	20	54	4

FIND NO.	NEXT ASSEMBLY	QTY REQD	PART NUMBER	DESCRIPTION	MATERIAL	MATERIAL SPECIFICATION	NOTE
7	2003HA301-1	1	2003HA302-1	CUSHION, BACK ASSEMBLY			
6	2003HA301-1	1	2003HA301-1	CUSHION, SEAT ASSEMBLY			
5							
4							
3							
2							
1	2003HA100-1	1	2003HA300-1	CUSHION, ASSEMBLY			

PARTS LIST

DISTRIBUTION STATEMENT A:
APPROVED FOR PUBLIC RELEASE;
DISTRIBUTION IS UNLIMITED.

NEXT ASSY	USED ON
APPLICATION	

INTERPRET DRAWING IAW MIL-STD-100
UNLESS OTHERWISE SPECIFIED DIMENSIONS ARE IN INCHES
TOLERANCES SHALL NOT BE CUMULATIVE
FRACTIONS
0 TO 1/2 ± 1/32
1/2 TO 1 INCL. ± 1/16
1 TO 5 INCL. ± 1/8
5 TO 10 INCL. ± 1/4
REMOVE ALL BURRS. BREAK SHARP EDGES .005-.015

NAVAL AIR WARFARE CENTER AIRCRAFT DIVISION PATUXENT RIVER
HUMAN SYSTEMS ENGINEERING DEPT. (1.6.7.2)

DRAFTSMAN	J. SIWINSKI	21MAY03
DESIGNER	B. HARVEY	21MAY03
PROJECT ENGINEER	TOYA BARROS	21MAY03
PROJECT TEAM LEADER/ SYSTEM ENGINEER	WILLIAM GLASS	21MAY03

DEPARTMENT OF THE NAVY
NAVAL AIR SYSTEMS COMMAND
PATUXENT RIVER, MD 20670-1620

CUSHION, ASSEMBLY
NHTSA SEAT

SIZE	CAGE NO.	NAVAIR DWG. NO.	REV.
D	30103	2003HA300	
SCALE NONE	SEE 2002-21	SHEET 1 OF 1	

2003HA300

CAD MAINTAINED. CHANGES SHALL BE INCORPORATED BY THE DESIGN ACTIVITY.

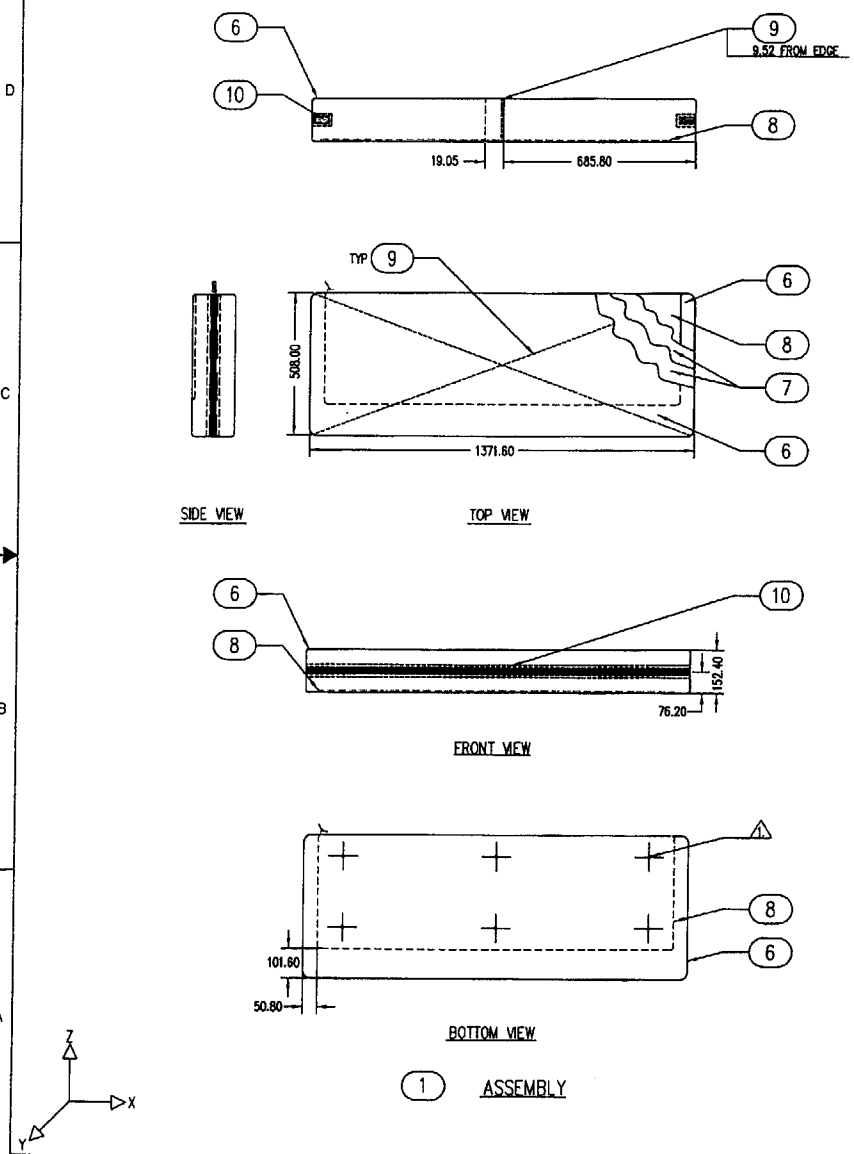

NOTES

1. ALL DIMENSIONS ARE IN METRIC (MM) EXCEPT FOR PARTS WHICH ARE IN INCHES. DRAWING IS NOT DRAWN TO SCALE.
2. PUNCH (6) HOLES .28 DIA. ON BACK OF (6) ON TO ALLOW PROTRUSION OF SCREWS. (MATCH TO 2003HA303-1)
3. (6) SHALL BE ELASTIC BACK AUTOMOTIVE UPHOLSTERY VINYL.
4. (10) SHALL BE 100 INCHES LONG AND RUN AROUND 3 SIDES OF (6)
5. STITCHING SHALL BE ASTM D6193, STITCH TYPE 301, 6 TO 8 SPL

FIND NO.	NEXT ASSEMBLY	QTY REQD	PART NUMBER	DESCRIPTION	MATERIAL	MATERIAL SPECIFICATION	NOTE
10	2003HA301-1	AR	2003HA301-10	SLIDE FASTENER		VF-106	4
9	2003HA301-1	AR	2003HA301-9	THREAD, (STITCHING)		V-T-295-E	5
8	2003HA301-1	AR	2003HA301-8	BACKING, CUSHION		.38 PLYWOOD,	
7	2003HA301-1	AR	2003HA301-7	FOAM, CUSHION			
6	2003HA301-1	AR	2003HA301-6	COVER, CUSHION	VINYL	AUTOMOTIVE UPHOLSTERY	2, 3, 4
5							
4							
3							
2							
1	2003HA300-1	1	2003HA301-1	CUSHION, SEAT ASSEMBLY			

PARTS LIST

DISTRIBUTION STATEMENT A:
APPROVED FOR PUBLIC RELEASE;
DISTRIBUTION IS UNLIMITED.

NEXT ASSY	USED ON
APPLICATION	

INTERPRET DRAWING IAW MIL-STD-100
UNLESS OTHERWISE SPECIFIED DIMENSIONS ARE IN MM
TOLERANCES SHALL NOT BE CUMULATIVE
0 TO 12.7MM ± 0.79MM
12.7 TO 25.4MM ± 1.588MM
25.4MM TO 127MM ± 3.175MM
127MM TO 254MM ± 6.35
REMOVE ALL BURRS. BREAK SHARP EDGES .12700MM -.38100MM

NAVAL AIR WARFARE CENTER
AIRCRAFT DIVISION/PATUXENT RIVER
HUMAN SYSTEMS ENGINEERING DEPT. (4.6.7.2)

DRAFTSMAN	J. SIWINSKI	7MAY03
CHECKER	B. HARVEY	7MAY03
PROJECT ENGINEER	TOYA BARROS	7MAY03
PROJECT MAN LEADER/ TECHN ENGINEER	WILLIAM GLASS	7MAY03

DEPARTMENT OF THE NAVY
NAVAL AIR SYSTEMS COMMAND
PATUXENT RIVER, MD 20670-1628

CUSHION, SEAT ASSEMBLY
NHTSA SEAT

SIZE	CAGE NO.	NAVAIR DWG. NO.	REV.
D	30103	2003HA301	
SCALE NONE	SEE 2002-21	SHEET 1 OF 1	

CAD MAINTAINED. CHANGES SHALL BE INCORPORATED BY THE DESIGN ACTIVITY.

REVISIONS

ZONE	REV	DESCRIPTION	DATE	APPROVED

2003HA301

REVISIONS				
ZONE	REV	DESCRIPTION	DATE	APPROVED

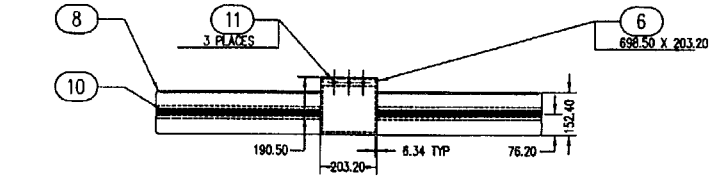

TOP VIEW

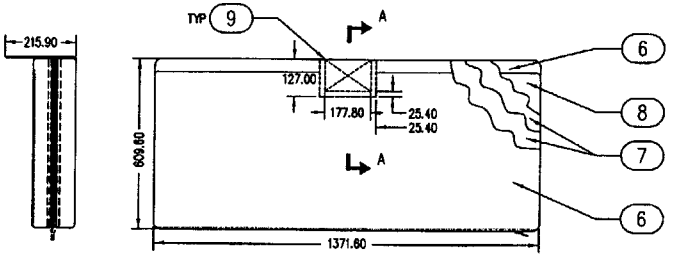

SIDE VIEW

FRONT VIEW

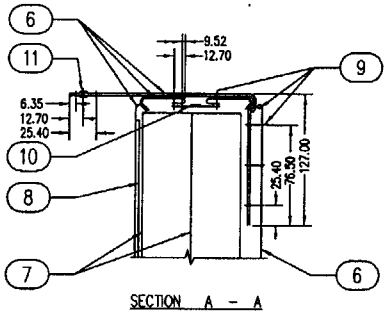

SECTION A - A

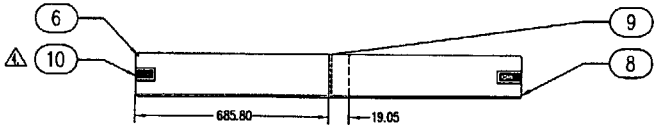

BOTTOM VIEW

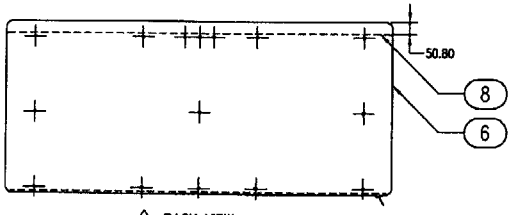

2 BACK VIEW

1 ASSEMBLY

NOTES

1. ALL DIMENSIONS ARE IN METRIC (MM) EXCEPT FOR PARTS WHICH ARE IN INCHES. DRAWING IS NOT DRAWN TO SCALE.
2. PUNCH (15) HOLES .28 DIA. ON BACK OF (6) ON TO ALLOW PROTRUSION OF SCREWS. (MATCH TO 2003HA303-2)
3. (6) SHALL BE ELASTIC BACK AUTOMOTIVE UPHOLSTERY VINYL.
4. (10) SHALL BE 100 INCHES LONG AND RUN AROUND THREE SIDES OF COVER.
5. STITCHING SHALL BE ASTM D6193, STITCH TYPE 301, 6 TO 8 SPI.

FIND NO.	NEXT ASSEMBLY	QTY REQD	PART NUMBER	DESCRIPTION	MATERIAL	MATERIAL SPECIFICATION	NOTE
11	2003HA302-1	3	2003HA302-11	GROMMETS			
10	2003HA302-1	AR	2003HA302-10	SLIDE FASTENER		VF-106	4
9	2003HA302-1	AR	2003HA302-9	THREAD, (STITCHING)		V-T-295-E	5
8	2003HA302-1	AR	2003HA302-8	BACKING, CUSHION		.38 PLYWOOD,	
7	2003HA302-1	AR	2003HA302-7	FOAM, CUSHION			
6	2003HA302-1	AR	2003HA302-6	COVER, CUSHION	VINYL	AUTOMOTIVE UPHOLSTERY	2, 3
5							
4							
3							
2							
1	2003HA300-1	1	2003HA302-1	CUSHION, BACK ASSEMBLY			

PARTS LIST

2003HA302

DISTRIBUTION STATEMENT A: APPROVED FOR PUBLIC RELEASE; DISTRIBUTION IS UNLIMITED.

NEXT ASSY	USED ON
APPLICATION	

INTERPRET DRAWING IAW MIL-STD-100

UNLESS OTHERWISE SPECIFIED DIMENSIONS ARE IN MM

TOLERANCES SHALL NOT BE CUMULATIVE

0 TO 12.7MM ± 0.79MM
12.7 TO 25.4MM ± 1.58MM
25.4MM TO 127MM ± 3.17MM
127MM TO 254MM ± 6.35

REMOVE ALL BURRS. BREAK SHARP EDGES .127MM -.381MM

NAVAL AIR WARFARE CENTER AIRCRAFT DIVISION/PATUXENT RIVER HUMAN SYSTEMS ENGINEERING DEPT. (4.8.7.2)

		DATE
DRAFTSMAN	J. SWINSKI	21MAY03
CHECKER	B. HARVEY	21MAY03
PROJECT ENGINEER	TOYA BARROS	21MAY03
PROJECT TEAM LEADER/ SYSTEM ENGINEER	WILLIAM GLASS	21MAY03

DEPARTMENT OF THE NAVY
NAVAL AIR SYSTEMS COMMAND
PATUXENT RIVER, MD 20670-1628

CUSHION, BACK ASSEMBLY
NHTSA SEAT

SIZE	CAGE NO.	NAVAIR DWG. NO.	REV.
D	30203	2003HA302	
SCALE NONE	SEE 2002-21	SHEET 1 OF 1	

CAD MAINTAINED. CHANGES SHALL BE INCORPORATED BY THE DESIGN ACTIVITY.

REVISIONS				
ZONE	REV	DESCRIPTION	DATE	APPROVED

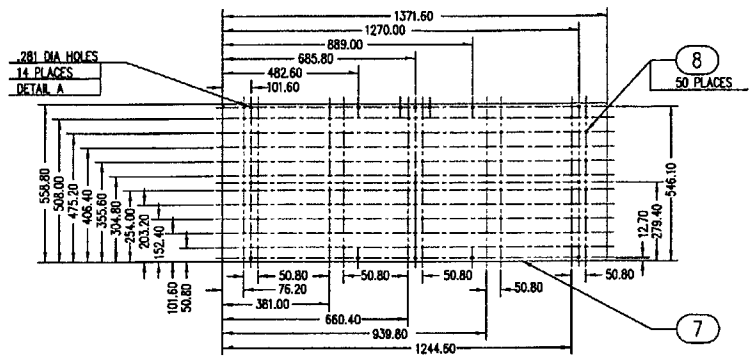

BACK VIEW

(2) ASSEMBLY

BACK SIDE VIEW

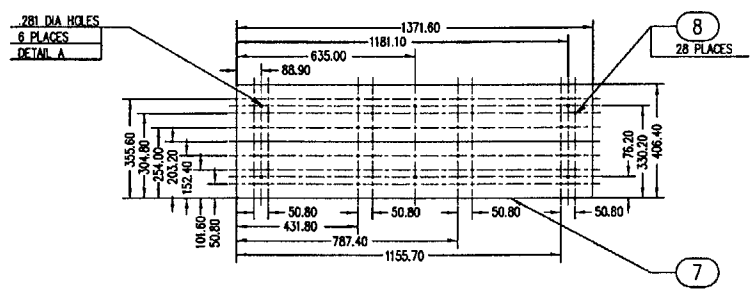

BASE TOP VIEW

(1) ASSEMBLY

BASE SIDE VIEW

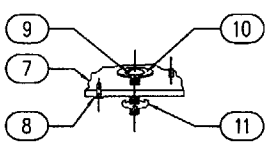

DETAIL A TYPICAL

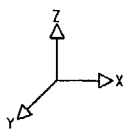

NOTES

1. ALL DIMENSIONS ARE IN METRIC (MM) EXCEPT FOR PARTS, AND DIAMETERS, WHICH ARE IN INCHES. DRAWING IS NOT DRAWN TO SCALE.
2. IT IS RECOMMENDED THAT THE FRAME, TOP ASSEMBLY BE USED AS A TEMPLATE TO DRILL HOLES. (1) SHALL BE CLAMPED IN POSITION ON 2003HA203-1, IN ORDER TO DRILL HOLES TO MATCH. USE A .281 DIA. THRU HOLE OR A SIZE FOR LIGHT PRESS FIT TO THE NECK OF "T" NUT, (11).
3. IT IS RECOMMENDED THAT THE FRAME, BACK ASSEMBLY BE USED AS A TEMPLATE TO DRILL HOLES. (2) SHALL BE CLAMPED IN POSITION ON 2003HA204-1, IN ORDER TO DRILL HOLES TO MATCH. USE A .281 DIA. THRU HOLE OR A SIZE FOR LIGHT PRESS FIT TO THE NECK OF "T" NUT, (11).
4. (9) SHALL BE SECURELY FASTENED TO BACKING, SEAT ASSEMBLY (1) AND BACKING, BACK ASSEMBLY (2) AS SHOWN IN DETAIL A. THE NECK OF (11) SHALL NOT EXCEED THE THICKNESS OF BACKING (7).
5. SEE DETAIL A FOR TYPICAL VIEW SHOWING NAILS (8) AND "T" NUT ASSEMBLY (9) USED TO SECURE FOAM TO BACKING, (7) AND TO ATTACH (7) TO TOP AND BACK FRAME ASSEMBLIES.
6. REMOVE ALL SHARP EDGES OF BACKING (7) TO AVOID TEARING VINYL COVER. A .50 RADIUS SHALL TYPICAL FOR CORNERS OF (7)
7. NAILS (8) SHALL BE DRIVEN THRU FROM UNDERSIDE OF BACKING (7) TO MAINTAIN FOAM IN POSITION DURING IMPACT.

FIND NO.	NEXT ASSEMBLY	QTY REQD	PART NUMBER	DESCRIPTION	MATERIAL	MATERIAL SPECIFICATION	NOTE
11	2003HA303-1	16	2003HA303-11	"T" NUT		.25-20 NC X .38 THICK	
10	2003HA303-1	16	2003HA303-10	WASHER, FENDER		1.00-O.D.	
9	2003HA303-1	16	2003HA303-9	"T" NUT ASSEMBLY			
8	2003HA303-1	78	2003HA303-8	NAILS, FLAT HEAD		.750 LONG	
7	2003HA303-1	AR	2003HA303-7	BACKING, CUSHION		.38	
6							
5							
4							
3							
2	2003HA302-1	1	2003HA303-2	BACKING, BACK ASSEMBLY			
1	2003HA301-1	1	2003HA303-1	BACKING, SEAT ASSEMBLY			

PARTS LIST

DISTRIBUTION STATEMENT A:
APPROVED FOR PUBLIC RELEASE;
DISTRIBUTION IS UNLIMITED.

NEXT ASSY	USED ON
APPLICATION	

INTERPRET DRAWING IAW MIL-STD-100
UNLESS OTHERWISE SPECIFIED DIMENSIONS ARE IN MM
TOLERANCES SHALL NOT BE CUMULATIVE
0 TO 12.7MM ± 0.79MM
12.7 TO 25.4MM ± 1.58MM
25.4MM TO 127MM ± 3.175MM
127MM TO 254MM ± 6.35
REMOVE ALL BURRS, BREAK SHARP EDGES .127(0MM -.381(0MM

CAD MAINTAINED. CHANGES SHALL BE INCORPORATED BY THE DESIGN ACTIVITY.

NAVAL AIR WARFARE CENTER AIRCRAFT DIVISION/PATUXENT RIVER HUMAN SYSTEMS ENGINEERING DEPT. (4.6.7.2)

DRAFTING	J. SIWINSKI	21MAY03
DESIGN	B. HARVEY	21MAY03
PROJECT ENGINEER	TOYA BARROS	21MAY03
PROJECT ENGINEER/ TEAM LEADER	WILLIAM GLASS	21MAY03

DEPARTMENT OF THE NAVY
NAVAL AIR SYSTEMS COMMAND
PATUXENT RIVER, MD 20670-1628

BACKING,
SEAT AND BACK ASSEMBLY
NHTSA SEAT

SIZE	CAGE NO.	NAVAIR DWG. NO.	REV.
D	30103	2003HA303	

SCALE NONE | SEE 2002-21 | SHEET 1 OF 1

2003HA303