243781

DEPT. OF TRANSPORTATION
DOCKETS

2003 MAY 21 P 3:03

FHWA-2001-10370-11

Vehicle Weights and Dimensions Limits Within the NAFTA Partnership

- **Baseline standards for the International Access Network**
- **Application of highway safety performance criteria**
- **Performance Standards – future considerations**

Draft February 2002

Table of Contents

Preface **3**

Part 1 – Current Vehicle Weights and Dimensions Limits by Configuration **5**

Tractor Semitrailer – Five Axles 6
Tractor Semitrailer – Six Axles 8
A Train Double – Five Axles 10
A Train Double – Six Axles 12

Part 2 – Highway Safety Performance Criteria and Recommended Dimension Controls and Limits **14**

a) Overall Height 15
b) Overall Width 15
c) Overall Length 16
d) Trailer Length 17
e) Performance Criteria: Transient Low-Speed Offtracking 18
f) Tractor Wheelbase 19
g) Semitrailer Wheelbase 19
h) Performance Criteria: Swingout at Front of Semitrailer While Turning 20
i) Kingpin Setback 20
j) Performance Criteria: Swingout at Rear of Semitrailer While Turning 21
k) Effective Rear Overhang on Semitrailers 22

Part 3 –Highway Safety Performance Criteria: Additional Considerations for Future Development **23**

a) Acceleration Performance 24
b) Dynamic Axle Loading/Suspension Characteristics 24
c) Bridge Overstress 24
d) Productivity: Impact on Pavement Relative to Payload Carried 25
e) Load Transfer Ratio 25
f) Transient High Speed Offtracking 26
g) Friction Demand in Tight Turns 27

Preface

The North American Free Trade Agreement of 1994 established the foundation for an economic partnership between Canada, the United States and Mexico. Achieving the full economic benefits of this partnership will depend upon establishing and maintaining efficient transportation systems to support mobility, manufacturing and distribution processes throughout North America. In this context, highway freight transportation is expected to continue to play an important role in support of the economic goals of NAFTA.

Regulations affecting the highway freight transportation industry are established by federal, state, provincial and local governments throughout North America. While it has long been recognized that safe, efficient highway transportation systems are critical to local, regional, state and national economies, with such broadly dispersed jurisdiction, there is complex web of regulations affecting highway freight transportation, particularly in the area of vehicle size and weight restrictions.

The Land Transportation Standards Subcommittee (LTSS) was established under NAFTA, with responsibility for pursuing opportunities to establish more compatible transportation related regulations within the three countries. The mandate of LTSS Working Group 2 is vehicle weight and dimension regulations, and been actively exchanging information and perspectives on the regulations in this area. Over the past 5 years LTSS 2 has prepared and released two documents on the discussions carried out to date:

"Harmonization of Vehicle Weights and Dimensions within the NAFTA Partnership"
This report provides a depiction of the highway transportation systems in each country, along with a comparison of existing regulations in each country, a discussion of the underlying policy and engineering considerations, and potential opportunities to improve compatibility.

"Highway Safety Performance Criteria In Support of Vehicle Weight and Dimension Regulations: Candidate Criteria & Recommended Thresholds"
Conceptually, the safety performance criteria, thresholds, and vehicle dimension limits proposed in this report would:

- apply to selected major highways in Canada, the United States and Mexico. The responsibility for selecting highways for inclusion in the International Access Network (IAN) would rest with each of the administrations responsible for operating and maintaining portions of the highway network. In this context, highways which have physical characteristics or restrictions, which are not compatible with the limits, proposed would not be candidates for inclusion in the IAN.

- represent "minimum" standards which would be compatible with the highways included in the IAN. Highway administrations could chose to adopt or retain more liberal thresholds or dimension limits for routes under their jurisdiction which are included in the IAN.

- apply initially to operation of five and six axle tractor-semitrailer and double trailer combinations on the IAN.

Achieving consensus on appropriate safety performance criteria and accompanying thresholds would provide a technically sound basis for identifying an International Access Network in support of the efficient movement of highway transport vehicles within the NAFTA partnership. Agreement on common definitions for the application of dimension limit regulatory controls would also serve to address many of the current "administrative" barriers faced by carriers which operate between jurisdictions.

It is acknowledged that a large number of governments within North America have authority over, and responsibility for, vehicle size and weight limits on highways within their jurisdiction. The concepts described in this paper are not intended to challenge this authority, but rather are offered as a basis for discussion of opportunities to harmonize elements of public policy which:

- are essential for protection of the safety of all users of the public highway system(s), and
- are necessary to ensure the characteristics of freight vehicles are compatible with the highways they use, but
- may be impeding the efficiency of interjurisdictional travel because of differing policy approaches to the same objective

It is recognized and understood that consideration of legislative or regulatory changes in each of the local, state/provincial and federal governments within North America must follow prescribed and democratic processes.

Part 1 – Current Vehicle Weights and Dimensions Limits by Configuration

The initial focus of discussions by LTSS Working Group 2 has been on highway freight transport vehicle configurations which can currently operate within and between the three countries at gross vehicle weights up to 36,287 kg (80,000 lb). These include the 5 and 6 axle tractor semitrailer and the 5 and 6 axle A train double trailer combinations.

The weight and dimension limits which currently apply to these configurations are established by federal, state and provincial governments, as described in the earlier LTSS 2 report: *"Harmonization of Vehicle Weights and Dimensions Within the NAFTA Partnership"*. The applicable weight and dimension limits vary quite widely by country, region and roadway classification.

To assist in clarifying the requirements which must be met for broad based operation of these vehicle configurations in all three countries, the following summaries present the "minimum" weight and dimension limits which would apply for travel on national level road networks. While higher weights and more liberal dimension controls can be found in some regions of all three countries, vehicles which meet all of the requirements outlined in this section would be able to operate relatively freely throughout North America.

As a foundation for further regulatory harmonization discussions, it is proposed that all jurisdictions which regulate vehicle weight and dimension limits:

- consider the acceptability of the described limits, and the underlying rationale, as minimum standards
- identify route networks within their jurisdiction which would be suited to travel by vehicles which comply with the identified limits, in pursuit of identifying an International Access Network (IAN)

Tractor Semitrailer – Five Axles

Part 1 - Dimension Limits

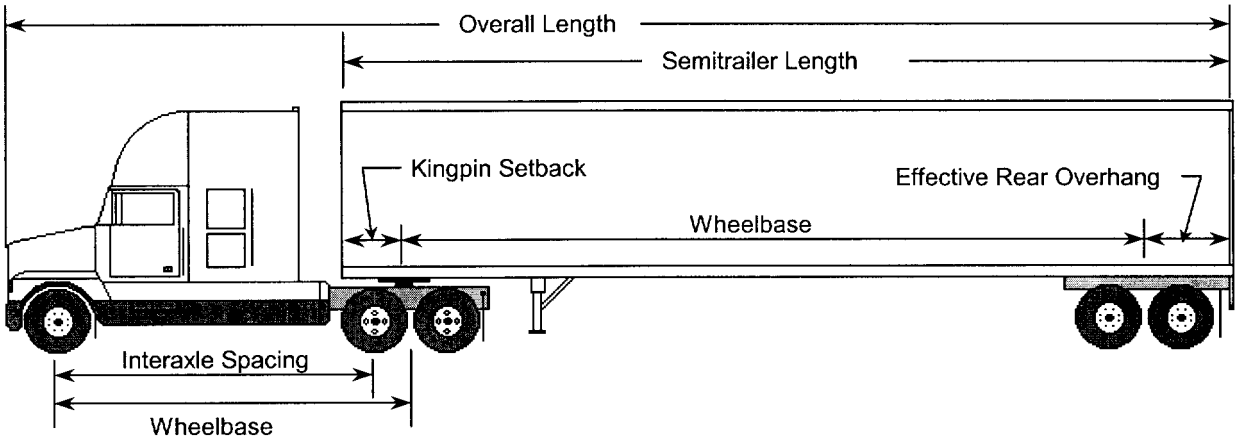

DIMENSION	LIMIT	
Overall Length	Maximum 23 m	Maximum 75.5 ft
Overall Width	Maximum 2.6 m	Maximum 102 in
Overall Height	Maximum 4.15 m	Maximum 13.5 ft
Tractor:		
Interaxle Spacing	Minimum 3.0 m	Minimum 118 in
Wheelbase	Maximum 6.2 m	Maximum 244 in
Tandem Axle Spread	Minimum 1.2 m Maximum 1.85 m	Minimum 47.2 in Maximum 72.8 in
Semitrailer		
Length	Maximum 16.2 m	Maximum 53 ft
Wheelbase	Minimum 6.25 m Maximum 12.5 m	Minimum 20.5 ft Maximum 41 ft
Kingpin Setback	Max 2.0 m radius	Max 6.5 ft radius
Effective Rear Overhang	Max 35% of wheelbase	Max 35% of wheelbase
Tandem Axle Spread	Minimum 1.2 m Maximum 1.85 m	Minimum 47.2 in Maximum 72.8 in
Track Width	Minimum 2.5 m Maximum 2.6 m	Minimum 98.4 in Maximum 102 in

Tractor Semitrailer – Five Axles

Part 2 - Weight Limits

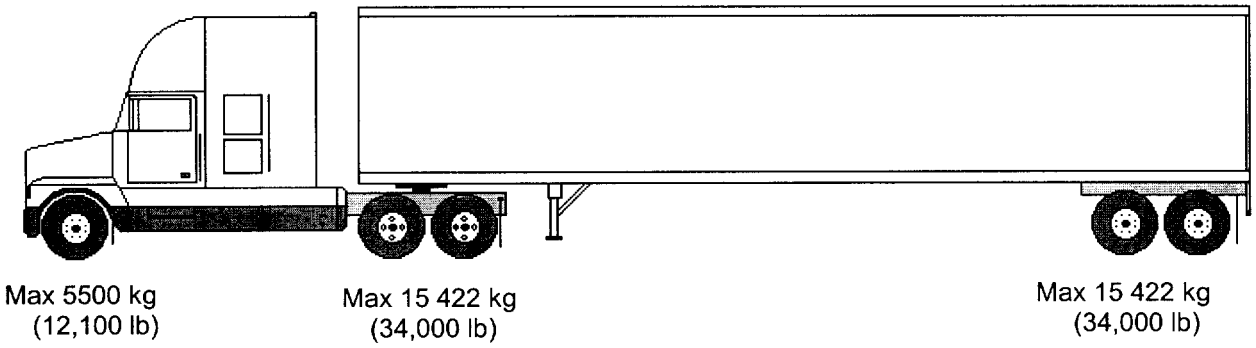

WEIGHT	LIMIT	
Axle Weights:		
Steering Axle	Maximum 5500 kg	Maximum 12,000 lb
Tractor Tandem Axle Group	Maximum 15 422 kg	Maximum 34,000 lb
Trailer Tandem Axle Group	Maximum 15 422 kg	Maximum 34,000 lb
Tire Loading		
Weight carried per width of tire	Maximum 10 kg/mm	Maximum 560 lb/in
Weight on a single tire (except steering axle)	Maximum 3000 kg	Maximum 6614 lb
Gross Vehicle Weight Limit		
Five Axle Configuration	Maximum 36 287 kg	Maximum 80,000 lb

Tractor Semitrailer – Six Axles

Part 1 - Dimension Limits

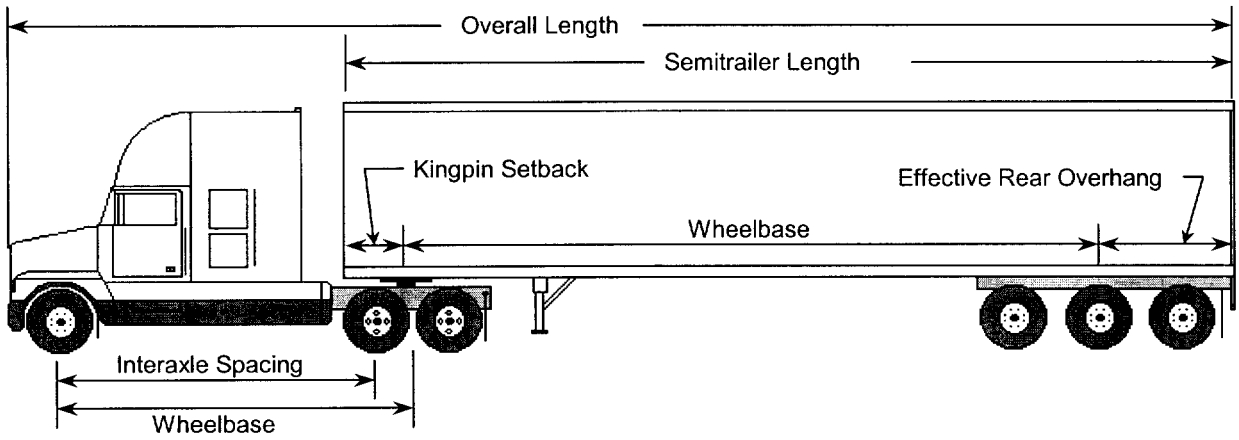

DIMENSION	LIMIT	
Overall Length	Maximum 23 m	Maximum 75.5 ft
Overall Width	Maximum 2.6 m	Maximum 102 in
Overall Height	Maximum 4.15 m	Maximum 13.5 ft
Tractor:		
Interaxle Spacing	Minimum 3.0 m	Minimum 118 in
Wheelbase	Maximum 6.2 m	Maximum 244 in
Tandem Axle Spread	Minimum 1.2 m Maximum 1.85 m	Minimum 47.2 in Maximum 72.8 in
Semitrailer		
Length	Maximum 16.2 m	Maximum 53 ft
Wheelbase	Minimum 6.25 m Maximum 12.5 m	Minimum 20.5 ft Maximum 41 ft
Kingpin Setback	Max 2.0 m radius	Max 6.5 ft radius
Effective Rear Overhang	Max 35% of wheelbase	Max 35% of wheelbase
Tridem Axle Spread	Minimum 2.4 m Maximum 3.7 m	Minimum 94.5 in Maximum 145.7 in
Track Width	Minimum 2.5 m Maximum 2.6 m	Minimum 98.4 in Maximum 102 in

Tractor Semitrailer – Six Axles

Part 2 - Weight Limits

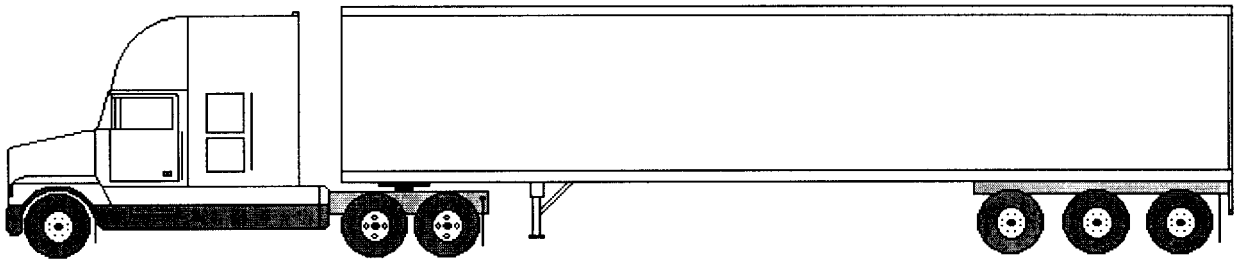

Max 5500 kg (12,100 lb)

Max 15 422 kg (34,000 lb)

Range: Max 19 051 kg to 20 412 kg (42,000 lb – 45,000 lb)

WEIGHT	LIMIT	
Axle Weight Limits:		
Steering Axle	Maximum 5500 kg	Maximum 12,100 lb
Tractor Tandem Axle Group	Maximum 15 422 kg	Maximum 34,000 lb
Trailer Tridem Axle Group		
Spread 2.4 m to 3.0 m	Maximum 19 051 kg	Maximum 42,000 lb
Spread 3.0 m to 3.6 m	Maximum 19 732 kg	Maximum 43,000 lb
Spread 3.6 m to 3.7 m	Maximum 20 412 kg	Maximum 45,000 lb
Tire Loading		
Weight carried per width of tire	Maximum 10 kg/mm	Maximum 560 lb/in
Weight on a single tire (except steering axle)	Maximum 3000 kg	Maximum 6614 lb
Gross Vehicle Weight Limit		
Six Axle Configuration	Maximum 36 287 kg	Maximum 80,000 lb

A Train Double – Five Axles

Part 1 - Dimension Limits

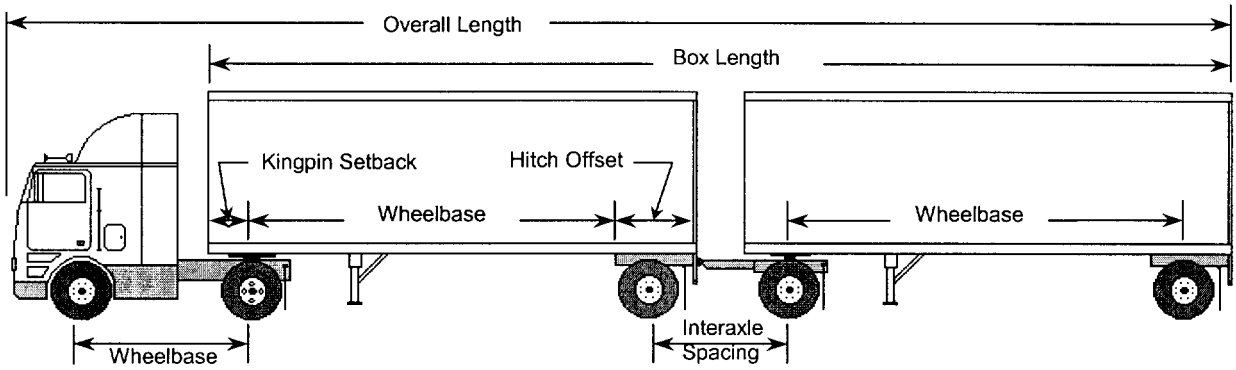

DIMENSION	LIMIT	
Overall Length	Maximum 25 m	Maximum 82 ft
Overall Width	Maximum 2.6 m	Maximum 102 in
Overall Height	Maximum 4.15 m	Maximum 13.5 ft
Box Length	Maximum 20 m	Maximum 65.6 ft
Tractor:		
Wheelbase	Minimum 3.0 m	Minimum 118 in
	Maximum 6.2 m	Maximum 244 in
Lead Semitrailer		
Wheelbase	Minimum 6.25 m	Minimum 20.5 ft
Kingpin Setback	Max 2.0 m radius	Max 6.5 ft radius
Hitch Offset	Maximum 1.8 m	Maximum 1.8 m
Track Width	Minimum 2.5 m Maximum 2.6 m	Minimum 98.4 in Maximum 102 in
Converter Dolly		
Interaxle Spacing	Minimum 3.0 m	Minimum 118 in
Second Semitrailer or Full Trailer		
Wheelbase	Minimum 6.25 m	Minimum 20.5 ft
Track Width	Minimum 2.5 m Maximum 2.6 m	Minimum 98.4 in Maximum 102 in

A Train Double – Five Axles

Part 2 - Weight Limits

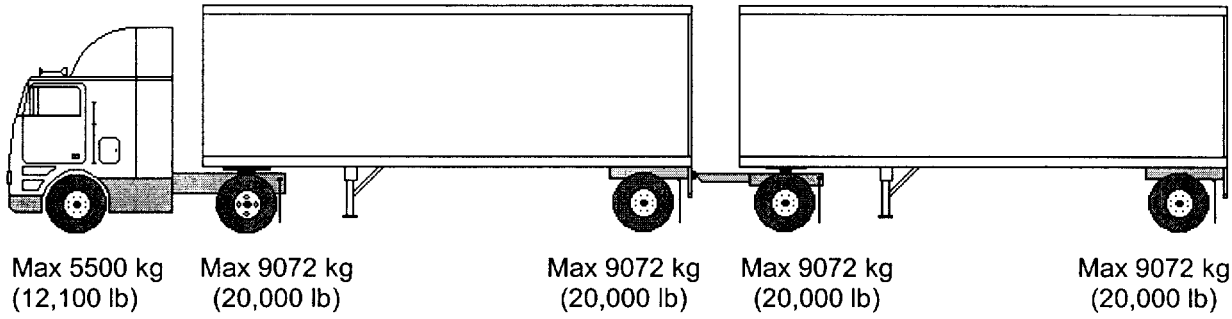

WEIGHT	LIMIT	
Axle Weight Limits:		
Steering Axle	Maximum 5500 kg	Maximum 12,100 lb
Tractor Drive Axle	Maximum 9072 kg	Maximum 20,000 lb
Trailer Single Axle	Maximum 9072 kg	Maximum 20,000 lb
Tire Loading		
Weight carried per width of tire	Maximum 10 kg/mm	Maximum 560 lb/in
Weight on a single tire (except steering axle)	Maximum 3000 kg	Maximum 6614 lb
Gross Vehicle Weight Limit:		
Five Axle Configuration	Maximum 36 287 kg	Maximum 80,000 lb

A Train Double – Six Axles

Part 1 - Dimension Limits

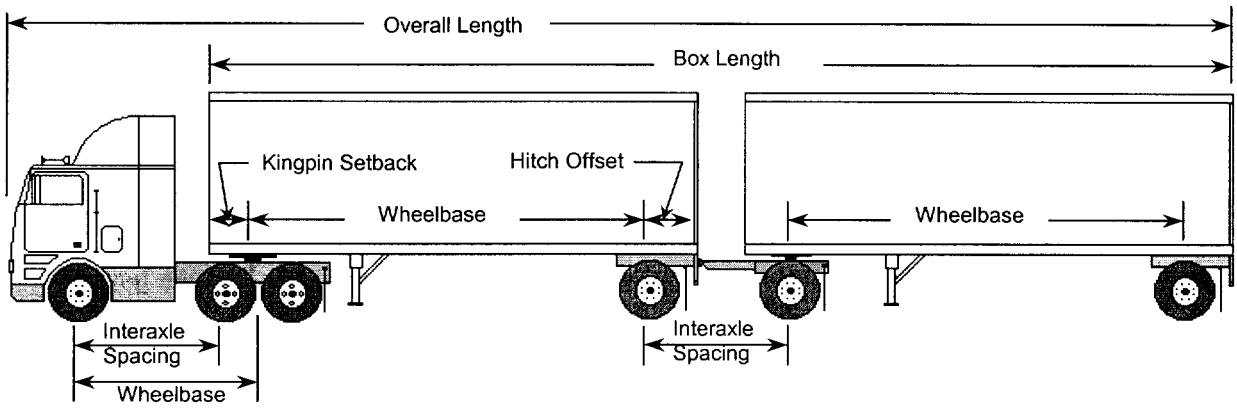

DIMENSION	LIMIT	
Overall Length	Maximum 25 m	Maximum 82 ft
Overall Width	Maximum 2.6 m	Maximum 102 in
Overall Height	Maximum 4.15 m	Maximum 13.5 ft
Box Length	Maximum 20 m	Maximum 65.6 ft
Tractor:		
Interaxle Spacing	Minimum 3.0 m	Minimum 118 in
Wheelbase	Maximum 6.2 m	Maximum 244 in
Tandem Axle Spread	Minimum 1.2 m Maximum 1.85 m	Minimum 47.2 in Maximum 72.8 in
Lead Semitrailer		
Wheelbase	Minimum 6.25 m	Minimum 20.5 ft
Kingpin Setback	Max 2.0 m radius	Max 6.5 ft radius
Hitch Offset	Maximum 1.8 m	Maximum 1.8 m
Track Width	Minimum 2.5 m Maximum 2.6 m	Minimum 98.4 in Maximum 102 in
Converter Dolly		
Interaxle Spacing	Minimum 3.0 m	Minimum 118 in
Second Semitrailer or Full Trailer		
Wheelbase	Minimum 6.25 m	Minimum 20.5 ft
Track Width	Minimum 2.5 m Maximum 2.6 m	Minimum 98.4 in Maximum 102 in

A Train Double – Six Axles

Part 2 - Weight Limits

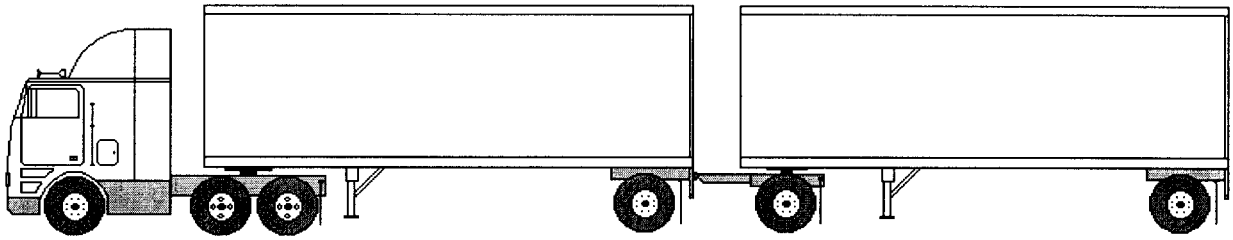

Max 5500 kg (12,100 lb) | Max 15 422 kg (34,000 lb) | Max 9072 kg (20,000 lb) | Max 9072 kg (20,000 lb) | Max 9072 kg (20,000 lb)

WEIGHT	LIMIT	
Axle Weight Limits:		
Steering Axle	Maximum 5500 kg	Maximum 12,100 lb
Tractor Tandem Axle	Maximum 15 422 kg	Maximum 34,000 lb
Trailer Single Axle:	Maximum 9072 kg	Maximum 20,000 lb
Tire Loading		
Weight carried per width of tire	Maximum 10 kg/mm	Maximum 560 lb/in
Weight on a single tire (except steering axle)	Maximum 3000 kg	Maximum 6614 lb
Gross Vehicle Weight Limits		
Six Axle Configuration	Maximum 36 287 kg	Maximum 80,000 lb

Part 2 – Highway Safety Performance Criteria and Recommended Dimension Controls and Limits

a) Overall Height

An overall height limit on vehicles is clearly warranted to ensure there is adequate clearance between vehicles and overhead structures on the roadway. While selected routings within North America offer vertical clearances of 5 metres or greater, there are many sections on the national highway systems where vertical clearances are 4.3 metres or less.

Limiting factors:

- compatibility with available vertical clearances on the roadway.
- impact on the stability of commercial vehicles which are designed to fully exploit the "dimensional envelope" described by the regulations (that is, impact on the height of a vehicle's centre of gravity)

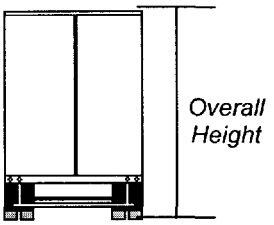

Recommended IAN Standard:	
Overall Height :	**Maximum 4.15 m (13.61 ft)**

b) Overall Width

An overall width limit on vehicles is needed to ensure that large commercial vehicles are compatible with the space available within a single lane on the public roadway system. While wider vehicles could be accommodated on selected high standard routings within North America, a considerable percentage of the highway network is based on a lane width of 3.0 metres or less.

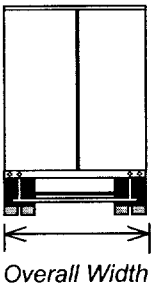

Recommended IAN Standard:	
Overall Width:	**Maximum 2.60 m (102.36 in)**

c) Overall Length

It could be argued that an overall length limit on commercial vehicles is not required for multi-lane freeways, where passing opportunities for other vehicles are not dependent upon passing zones. However, within the NAFTA partnership a majority of the road networks in Mexico and Canada are two lane - two way roadways. Consequently, an overall length limit is required for these routes to ensure passing maneuvers can be safely accomplished within available sight distance and roadway striping controls.

Limiting factors:

- the maximum length of vehicle which can be safely passed within the passing sight distance and passing zone striping practices
- compatibility of the highway geometry with the turning and manoeuvering characteristics of vehicles at the length limit selected.

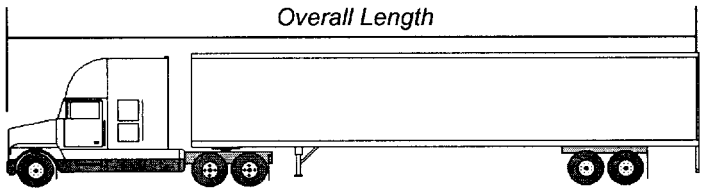

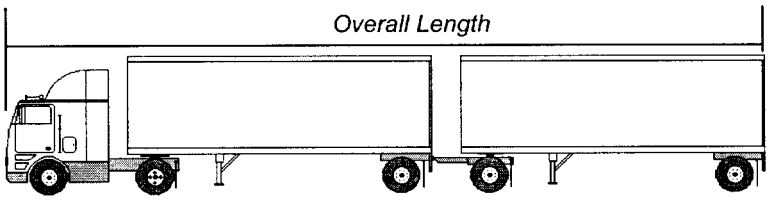

Recommended IAN Standards:	
Tractor-Semitrailer Combinations:	**Maximum 23.00 m (75.46 ft)**
Double Trailer Combinations:	**Maximum 25.00 m (82.0 ft)**

d) Trailer Length

Placing a limit on trailer length does not correlate directly to on-highway safety performance. However, in combination with a limit on overall vehicle length, it does provide a means to ensure that adequate space is available to use tractors with adequate wheelbase to address driver safety and comfort issues.

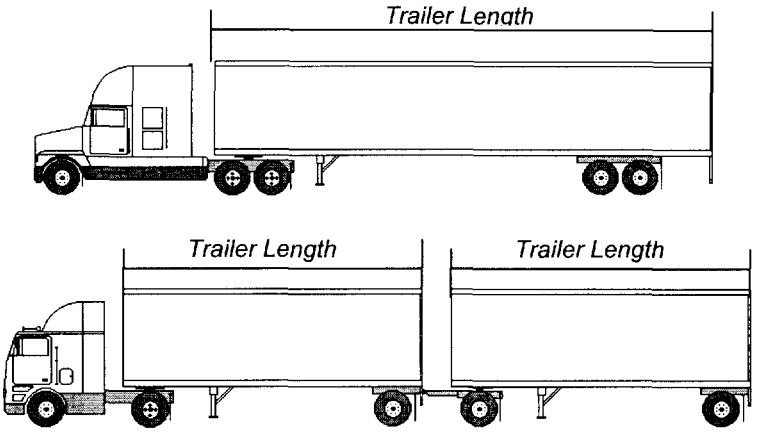

Recommended IAN Standards:	
Tractor-Semitrailer Combinations:	**Maximum 16.2 m (53.15 ft)**
Double Trailer Combinations:	**Maximum 8.7 m (28.5 ft)**

e) Performance Criteria: Transient Low-Speed Offtracking

As a matter of principle, the low-speed turning performance of large vehicles should be compatible with the available space at intersections and interchanges. Without specific attention to this aspect of vehicle performance, continued evolution in vehicle dimensions would result in increases in turning space requirements which cannot be safely accommodated within the geometric constraints of existing highway geometry.

Limiting factors:
- the available space within a traffic lane, shoulder, intersection or entrance/exit ramp
- horizontal clearances to road furniture

Influencing factors:
- the radius of the turn
- the wheelbase of the truck or tractor
- the wheelbase of the trailer(s) or semitrailer(s) (the distance from the kingpin to the centre of the axle group on the semitrailer)
- the length of drawbar on trailers or converter dollies
- the position of the fifth wheel, and
- the speed of the vehicle

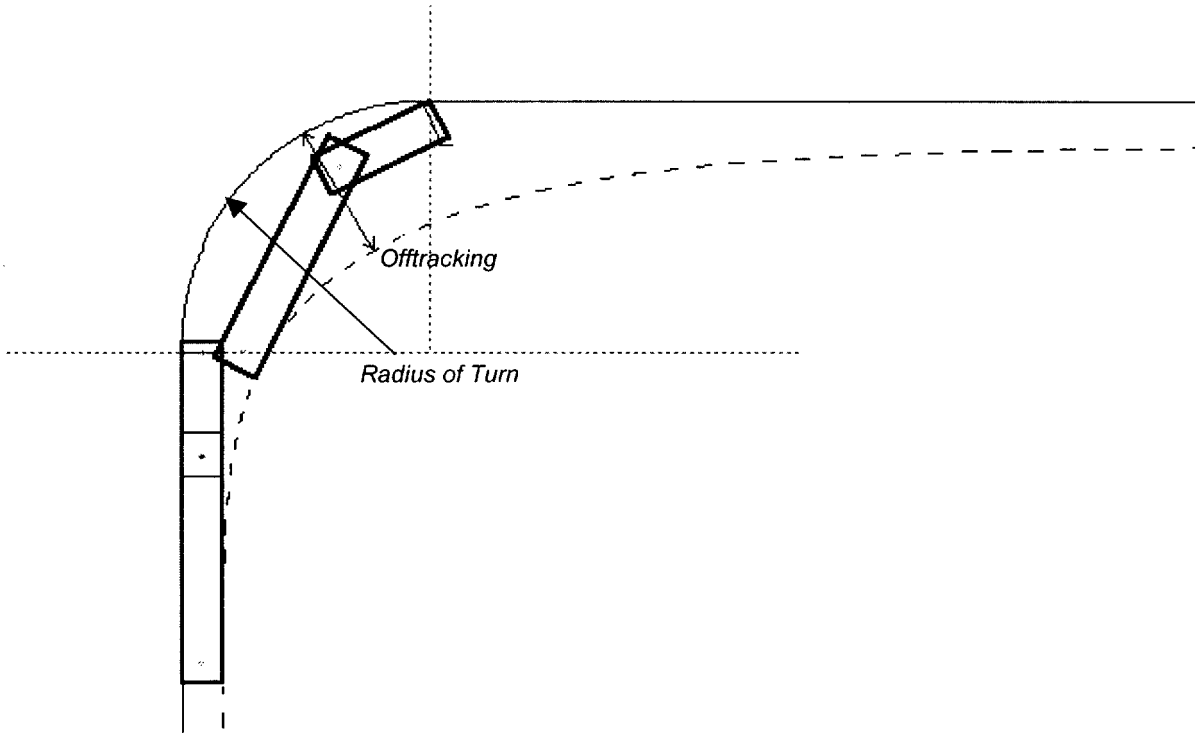

Recommended Performance Criteria: Transient Low Speed Offtracking
When a vehicle negotiates a 90° turn with an outside radius of 14.00 m (45.9 ft), the maximum extent of lateral excursion of the last axle of the vehicle, relative to the path followed by the tractor steering axle, should not exceed 5.60 m (18.3 ft).

Dimension Limits to Control Transient Low Speed Offtracking Performance

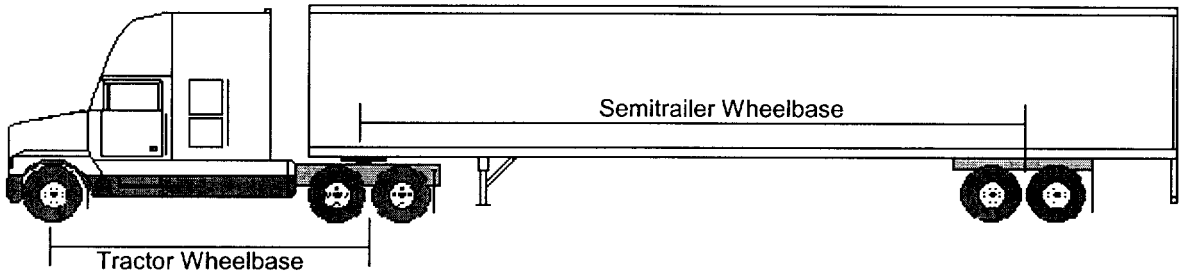

f) Tractor Wheelbase

Recommended IAN Standard:
The wheelbase of tractors must not exceed 6.2 m (244 inches)

g) Semitrailer Wheelbase

Recommended IAN Standard:
The wheelbase of semitrailers, in tractor-semitrailer configurations, must not exceed 12.5 m (41 ft)

h) Performance Criteria: Swingout at Front of Semitrailer While Turning

The low-speed turning performance and characteristics of large vehicles must be safely accommodated at intersections and interchanges and when turning on to a roadway. When turning on to a roadway, the front corner of the trailer may track outside the path followed by the tractor, and precaution is needed to ensure that there is no intrusion into the adjacent lane. The potential for intrusion into the oncoming traffic lane is of short duration, and is visible to the truck driver through the turn.

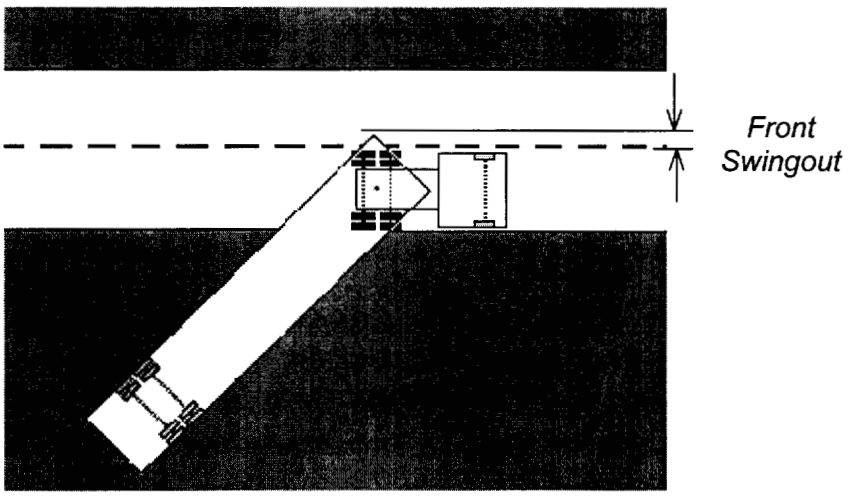

Recommended Performance Criteria: Swingout at Front of Semtrailer While Turning
When a vehicle negotiates a 90° turn with an outside radius of 14.00 m (45.9 ft), the maximum extent of excursion of the outside front corner of the vehicle or cargo relative to the path followed by the outside tractor drive tires, should not exceed 0.45 m (18 inches).

Dimension Limits to Control Front Swingout Performance

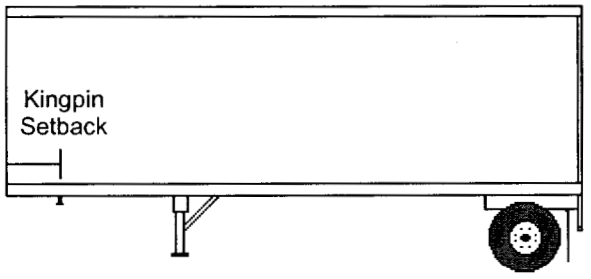

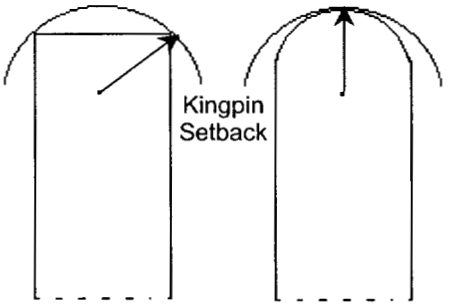

i) Kingpin Setback

Recommended IAN Standard:
The distance from the kingpin to any point forward of the kingpin on the semitrailer or cargo must not exceed 2.0 m (78.7 in.)

j) Performance Criteria: Swingout at Rear of Semitrailer While Turning

Intrusion of the vehicle into adjacent traffic lanes during turning manoeuvers poses a threat to the safety of other drivers, particularly with swing-out of the rear of the trailer. Consequently, a limit on rear swingout is required. As swingout at the rear of a trailer cannot be seen by the driver of the vehicle, intrusion into adjacent traffic lanes should be prevented.

Limiting factors:
- the available space within a traffic lane

Influencing factors:
- the radius of the turn
- the wheelbase of the trailer or semitrailer
- the effective rear-overhang of the trailer or semitrailer
- the rear overhang of the cargo

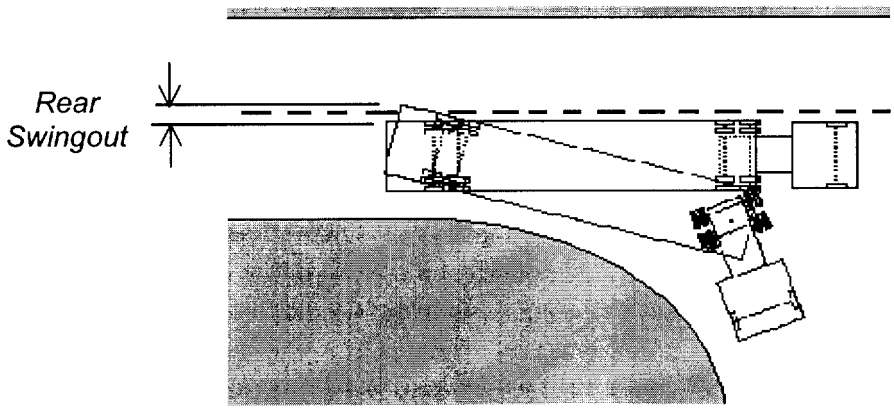

Recommended Performance Criteria:: Swingout at Rear of Semitrailer while Turning
When a vehicle negotiates a 90° turn with an outside radius of 14.00 m (45.9 ft), the maximum extent of excursion of the outside rear corner of the vehicle or cargo relative to the path followed by the outside rear tires, should not exceed 0.20 m (8 in).

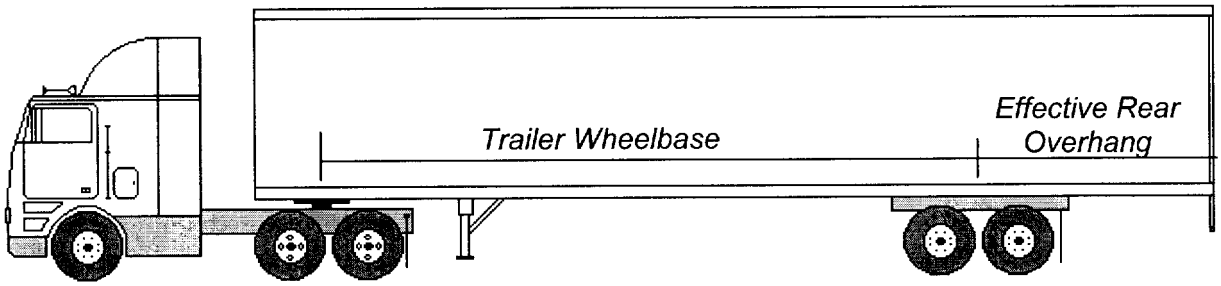

Resulting Dimension Controls

k) Effective Rear Overhang on Semitrailers

Recommended IAN Standard: **The effective rear overhang on semitrailers, in tractor semitrailer configurations, must not exceed 35% of the wheelbase of the semitrailer. The effective rear overhang is measured from the centre of the axle group at the rear of the semitrailer to the rearmost point on the semitrailer or cargo.**

Part 3 –Highway Safety Performance Criteria: Additional Considerations for Future Development

a) Acceleration Performance

The acceleration performance of heavy transport vehicles has some bearing on highway safety. However, as the current focus of LTSS 2 deliberations is on existing vehicles operating within a GVW cap of 80,000 lb, a performance standard is not warranted at this time. However, this measure is an important consideration relative to consideration of heavier weights, and potential impacts on the ability of a vehicle to enter traffic and maintain speeds on grades.

Acceleration vs Power to Weight Ratio (typical)

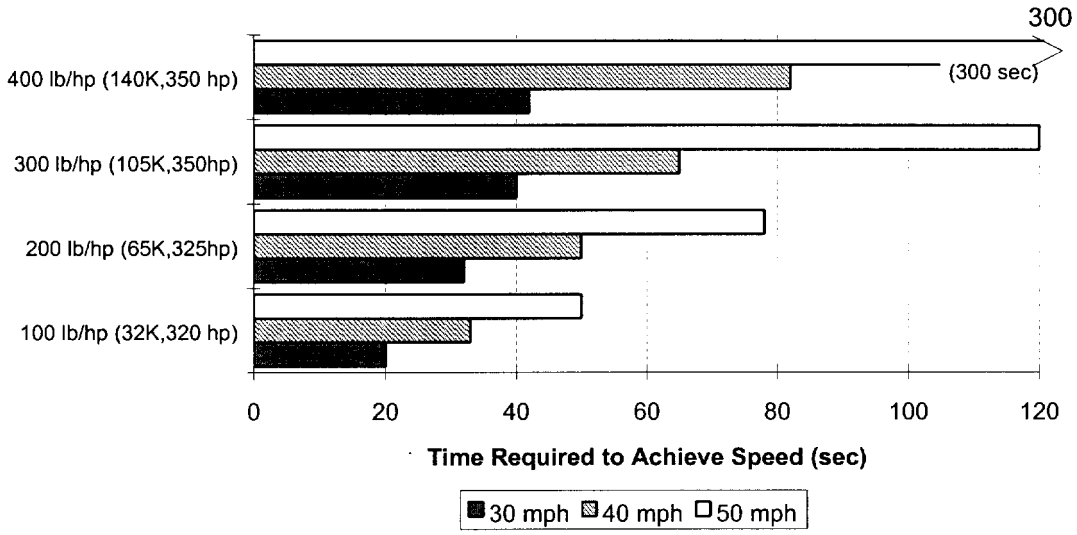

Recommended IAN Standard: **None proposed at this time**

b) Dynamic Axle Loading/Suspension Characteristics

While this issue has been subject to considerable research in recent years, the policy implications of the research findings remain unclear and are deserving of further study.

Recommended IAN Standard: **None proposed at this time**

c) Bridge Overstress

Bridge capacity analysis procedures vary widely within the federal, state and provincial jurisdictions represented by the NAFTA partnership. There is little prospect of developing a commonly accepted methodology for assessing bridge capacity or for establishing a universally

accepted overstress criterion. As the current focus of discussion is within the bridge capacity constraints provided by the US FHWA, no pressing action is needed by LTSS 2 in this area.

Recommended IAN Standard:
As discussion of weight related issues has been deferred by the committee to allow initial focus on vehicle dimension related issues, no bridge overstress criteria threshold is proposed at this time. However, it is recommended that development of appropriate criteria and thresholds be accorded high priority in future discussions.

d) Productivity: Impact on Pavement Relative to Payload Carried

There is growing interest in development of an objective measure of the "productivity" of different vehicle configurations, in terms of the amount of payload carried relative to the vehicle's impact on pavement infrastructure. While this concept remains to be fully developed, it is predicated on calculating a vehicle's pavement impact in terms of "ESAL's".

Within the NAFTA partnership, further deliberations will be required to pursue this concept and to develop standard analysis protocols.

Recommended IAN Standard:
As discussion of weight related issues has been deferred by the committee to allow initial focus on vehicle dimension related issues, no pavement impact related threshold is proposed at this time. However, it is recommended that consideration of performance criteria for pavement related impacts of heavy axle loads be accorded high priority in future discussions.

e) Load Transfer Ratio

Dynamic Load Transfer Ratio characterizes the extent to which a vehicle approaches the rollover condition in a dynamic steering manoeuver such as in avoiding an obstacle in the roadway.

This measure is expressed in terms of the fractional change in tire loads between left- and right-side tires in the manoeuver, thus indicating how close the vehicle came to lifting off all of its tires on one side, and rolling over.

The Load Transfer Ratio is calculated as follows:

$$Load\ Transfer\ Ratio = sum(F_L - F_R)/sum(F_L + F_R)$$

$$F_L = Left\ side\ tire\ loads$$

$$F_R = Right\ side\ tire\ loads$$

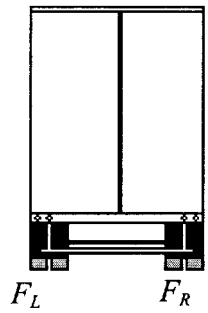

Implementation and enforcement of a true "performance based" standard for load transfer ratio presents insurmountable challenges for North America. The stability performance of individual highway transport vehicles can vary from day to day, being influenced by changes in the volume and density of loads carried, interchange of tractors and trailers, and the condition of components such as suspension and tires.

Enforcement of a Load Transfer Ratio safety performance criterion would not be possible or practical, given the nature of compliance verification facilities and the volume of trucks to be inspected. Nonetheless, as a regulatory principle, establishment of a Load Transfer Ratio performance criteria provides a benchmark for use in assessing the impacts of changes in weight or dimension limits for vehicle types currently in the fleet, or for considering the potential impacts of new types of vehicle configurations.

Recommended IAN Standard:
It is proposed that a Load Transfer Ratio performance criteria be adopted as a regulatory principle by LTSS 2, with an acceptability threshold of a maximum of 0.60.

f) Transient High Speed Offtracking

This performance measure is obtained from the same obstacle avoidance manoeuver used to assess Load Transfer Ratio. It is defined as the peak lateral overshoot of the rearmost trailer axle, following a severe lane-change-type maneuver. The amount of overshoot can be viewed as a relative indication of the extent of potential intrusion into an adjacent lane of traffic, or the potential for striking a curb (risking an impact-induced rollover).

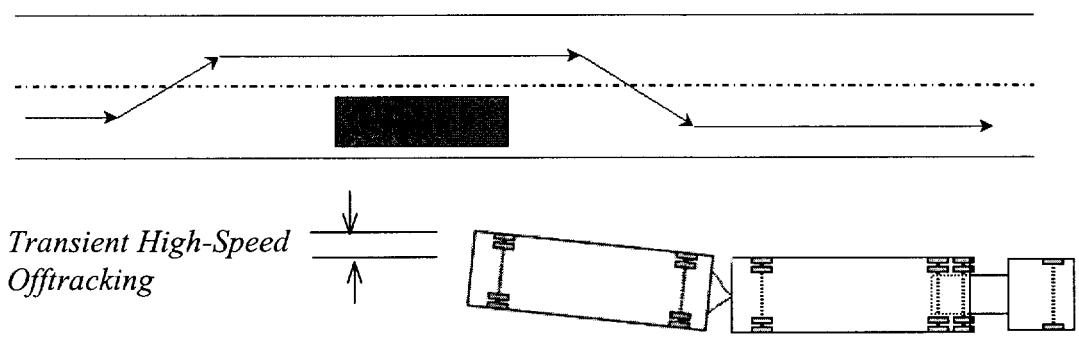

The issues respecting a "performance based" standard for Transient High Speed Offtracking are similar to those discussed under the section on Load Transfer Ratio. For similar reasons it is proposed that Transient High Speed Offtracking be established as a regulatory principle in support of regulatory harmonization discussions under NAFTA.

Recommended IAN Standard:
It is proposed that a Transient High-Speed Offtracking performance criteria be adopted as a regulatory principle by LTSS 2, with an acceptability threshold of a maximum of 0.8 metres (32 in).

g) Friction Demand in Tight Turns

This performance measure pertains to the resistance of multiple, non-steered axles to travelling around a tight-radius turn, such as at an intersection. The resistance to operating in a curved path results in a requirement, or demand, for tire side force at the tractor's drive axles, especially with semitrailers having widely spread axles. When the pavement friction level is low, such vehicles may exceed the friction which is available and produce a jackknife-type response. The friction demand measure describes the minimum level of pavement friction on which the vehicle can negotiate an intersection turn without suffering such a control loss.

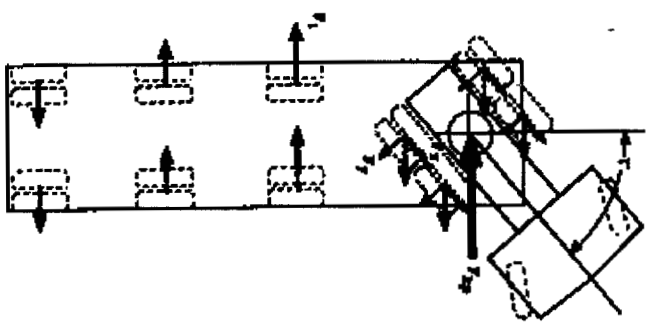

The implications of a performance standard for Friction Demand in Tight Turns are most directly related to the design of trailers. If regulatory policies encourage or provide payload incentives for designers to install multiple, widely spaced axles on trailers, this performance criterion becomes a relevant concern. However, as the initial focus for LTSS 2 is on 5 and 6 axle vehicle configurations, a performance criterion for Friction Demand is not warranted at this time.

Recommended IAN Standard:
None proposed