NHTSA-99-6407-142
NHTSA-00-7013-1

79022

DEPARTMENT OF TRANSPORTATION

National Highway Traffic Safety Administration

49 CFR Parts 552, 571, 585 and 595

[Docket No. NHTSA 00-7013; Notice 1]

RIN 2127-AG70

Federal Motor Vehicle Safety Standards;
Occupant Crash Protection

AGENCY: National Highway Traffic Safety Administration (NHTSA), DOT.

ACTION: Final rule; interim final rule.

SUMMARY: This rule amends our occupant crash protection standard to require that future air bags be designed to create less risk of serious air bag-induced injuries than current air bags, particularly for small women and young children; and provide improved frontal crash protection for all occupants, by means that include advanced air bag technology. To achieve these goals, it adds a wide variety of new requirements, test procedures, and injury criteria, using an assortment of new dummies. It replaces the sled test with a rigid barrier crash test for assessing the protection of unbelted occupants.

The issuance of this rule completes the implementation of our 1996 comprehensive plan for reducing air bag risks. It is also required by the Transportation Equity Act for the 21st Century (TEA 21), which was enacted in 1998.

This rule will ensure that advanced air bag technologies are installed across the full spectrum of future fleets of motor vehicles. As a result, the air bags in those vehicles will be even more effective than the current redesigned air bags in saving lives. At the same time, those air bags will be much less likely than those redesigned air bags to cause deaths or serious

injuries.

The provisions of this rule, particularly the maximum test speed for the unbelted rigid barrier test, reflect the uncertainty associated with simultaneously achieving the twin goals of TEA 21. This uncertainty leads us to take an approach that best assures improved air bag protection for occupants of all sizes, without compromising efforts to reduce the risks of injury to vulnerable occupants, including children and short women seated very close to air bags and out-of-position occupants. Such an approach is one that involves the least uncertainty for the occupants who have been most at risk. As long as the manufacturers improve the already substantial overall level of real world protection provided by current redesigned air bags, the uncertainty associated with the challenge of simultaneously achieving the twin goals of TEA 21 is best resolved at this point in favor of minimizing risk. This is especially true in the early stages of the introduction of advanced air bag technologies.

In light of that uncertainty, we are selecting the lower of two proposed speeds as the maximum test speed for the unbelted rigid barrier crash test and issuing that part of this rule as an interim final rule. To resolve that uncertainty, we are planning a multi-year effort to obtain additional data. We will issue a final decision regarding the maximum test speed after giving notice and seeking public comment. If we were to increase the speed, we would provide leadtime commensurate with the extent of that increase.

DATES:

Effective Date: The amendments made in this rule are effective [insert date 30 days after publication in the **Federal Register].**

The incorporation by reference of the publications listed in the rule is approved by the

Director of the Federal Register as of **[insert date that is 30 days after date of publication in the Federal Register].**

Petitions: Petitions for reconsideration must be received by **[insert date that is 45 days after date of publication in the Federal Register].**

ADDRESSES: Petitions for reconsideration should refer to the docket and notice number of this document and be submitted to: Administrator, National Highway Traffic Safety Administration, 400 Seventh Street, SW, Washington, DC 20590.

In light of our decision to issue the maximum test speed for the unbelted rigid barrier test as an interim final rule, we are keeping the docket for this document open to receive public input. Persons making submissions to the docket should refer to the docket and notice number of this document, As we obtain and analyze data, we will place the results in that docket.

FOR FURTHER INFORMATION CONTACT:

For non-legal issues, you may contact Clarke Harper, Chief, Light Duty Vehicle Division, NPS-1 1. Telephone: (202) 366-2264. Fax: (202) 366-4329. E-mail: Charper@NHTSA.dot.gov.

For legal issues, you may contact Edward Glancy or Rebecca MacPherson, Office of Chief Counsel, NCC-20. Telephone: (202) 366-2992. Fax: (202) 366-3820.

You may send mail to these officials at the National Highway Traffic Safety Administration, 400 Seventh St., S.W., Washington, D.C., 20590.

SUPPLEMENTARY INFORMATION:

For information about air bags and related rulemakings: Visit the home page of the NHTSA web site at http://www.nhtsa.dot.gov and select "Air Bags" under "Popular Information"

on the left hand side of the screen. On the next screen, select "Advanced Air Bags."

You may also view the materials in the docket for this rulemaking on the Internet. To do this, do the following:

(1) Go to the Docket Management System (DMS) Web page of the Department of Transportation (http://dms.dot.gov/).

(2) On that page, click on "search."

(3) On the next page (http://dms.dot.gov/search/), type in the four-digit docket number shown at the beginning of this document. Example: The docket number for the Supplemental Proposal in this rulemaking is "NHTSA 99-6407." If you want to view the materials filed for that notice, you would type "6407." (For this rule, you would type "7013.") After typing the docket number, click on "search."

(4) On the next page, which contains docket summary information for the docket you selected, click on the desired comments. You may download the comments and other materials.

Note to readers: As an aid to readers who are outside the engineering community, we have provided a glossary that briefly explains the key technical terms used in this preamble. In the case of the term, "fixed barrier crash test," we have supplemented the explanation with illustrations. That glossary appears in Appendix A at the end of the preamble, before the regulatory text. Readers may find it helpful to review that glossary before reading the rest of this document.

TABLE OF CONTENTS

I. Safety Problems

A. Frontal Crashes and the "Second Collision" -- The Leading Cause of Occupant Deaths

B. Preventing or Mitigating the Effects of the Second Collision Using Seat Belts and Air Bags

C. Air Bag Risks and Fatalities

D. Causes of Air Bag Fatalities

II. The Rule, Its Rationale, and Its Implementation

A. Key Provisions of the Rule

B. Other Provisions of the Rule

C. Future Rulemaking Plans

D. Monitoring of Implementation and Field Experience; Research and Technology Assessment

III. Our Proposals for Advanced Air Bags

A. Our Initial Proposal (September 1998)

B. Our Supplemental Proposal (November 1999)

IV. Public Comments on the Supplemental Proposal

V. Diagrams of the Rule Requirements

VI. Improving the Protection of Unbelted Occupants in Serious Crashes

A. Summary of Proposed Requirements

B. Type of Test

C. Agency Decision to Establish Maximum Test Speed at 40 km/h (25 mph)

1. The Supplemental Proposal

2. Summary of Comments

3. Decision on Maximum Test Speed

D. Other Issues

1. Location of 5th Percentile Adult Female Dummy

2. Minimum Test Speed

VII. Improving the Protection of Belted Occupants in Serious Crashes

A. Belted Rigid Barrier Crash Test

B. Belted Offset Deformable Barrier Crash Test

VIII. Minimizing the Risk of Injuries and Deaths Caused by Air Bags

A. Safety of Infants

1. Option 1: Feature (e.g., Weight or Size Sensor) That Suppresses the Air Bag When an Infant Is Present

2. Option 2: Low-Risk Deployment for Infants in Rear-Facing Child Safety Seats

B. Safety of Young Children

1. Option 1: Feature (e.g., Weight or Size Sensor) That Suppresses the Air Bag When a Child Is Present

2. Option 2: Low-Risk Deployment for Young Children

3. Option 3: Feature That Suppresses the Air Bag When a Child Is Out-of-Position

C. Safety of Teenage and Adult Drivers

1. Option 1: Low-Risk Deployment for Drivers

2. Option 2: Feature That Suppresses the Air Bag When a Driver Is Out-of-Position

IX. Injury Criteria

A. Head Injury Criteria

B. Neck Injury Criteria

C. Thoracic Criteria

D. Other Criteria

X. Lead Time and Effective Date

A. Large Manufacturers

B. Limited Line, Small, Multi-Stage Manufacturers and Alterers

1. Limited Line Manufacturers

2. Small Manufacturers

3. Multi-Stage Manufacturers and Alterers

XI. Availability of Original Equipment and Retrofit Manual On-Off Switches

XII. Warning Labels, Consumer Information, and Telltale Devices

A. Warning Labels and Consumer Information

B. Telltale Devices

XIII. Miscellaneous Issues

A. Child Restraints Used for Testing Suppression and Low-Risk Deployment Features

B. Dummy Positioning for Static Suppression and Low-Risk Deployment

Tests

C. Due Care Provision

D. Selection of Compliance Options

E. Credits for Early Compliance

F. Choice Between Complying with Existing And/or New Injury Criteria and Test Requirements

G. Time Periods for Measuring Injury Criteria During Tests

H. Cruise Controls

I. Rescue Operations

J. Hybrid III Dummy Neck

K. Seating Procedure for 5th Percentile Adult Female Dummy

L. Deletion of Tests Between the Initial and the Supplemental Proposals

M. Consideration of Unintended Consequences

N. Reporting Requirements

O. Use of Children and Adults for Testing Static Suppression Systems

P. Small Business Concerns

Q. Other Issues

1. Ability to Comment Effectively on the Supplemental Proposal

2. Resubmittal of Petition for Rulemaking by Donald Friedman and Carl Nash

XIV. Benefits and Costs

XV. **Rulemaking Analyses and Notices**

Appendix A Glossary

Appendix B Evolution of the Air Bag Provisions in Standard No. 208

Appendix C Chronology of DOT and NHTSA Responses to Air Bag Risks and Fatalities

Appendix D Installation of Advanced Technologies in Current Production Motor Vehicles

Regulatory Text

I. Safety Problems

A. Frontal Crashes and the "Second Collision"-- The Leading Cause of Occupant Deaths

Frontal crashes are the most significant cause of motor vehicle fatalities. More than 2/3's of the people killed in frontal crashes are unbelted. Young people, i.e., those in their teens and twenties, account for about 40 percent of the unbelted deaths.

The frontal crash of a vehicle involves two collisions. The first collision occurs when the vehicle strikes another vehicle or an object such as a tree. The second collision is the human collision with the vehicle interior.

When a vehicle collides with an object, a front seat occupant who is not wearing a seat belt becomes a projectile and keeps moving forward at speeds up to the vehicle's pre-crash speed. If that unbelted occupant is not protected by an air bag, the head or chest of the occupant usually slams into the steering wheel, dashboard, roof pillars or windshield. In the absence of an air bag, even belted occupants, particularly belted drivers, are likely to strike the vehicle interior with their head and neck or chest in a serious crash.

B. Preventing or Mitigating the Effects of the Second Collision Using Seat Belts and Air Bags

To prevent or mitigate the effects of the second collision, Standard No. 208 requires that vehicles be equipped with seat belts and frontal air bags.[1] Seats belts are estimated to save 9,500 lives in America each year. Research has found that lap/shoulder belts, when used properly, reduce the risk of fatal injury to front seat passenger car occupants by 45 percent and the risk of moderate-to-critical injury by 50 percent. For light truck occupants, seat belts reduce the risk of fatal injury by 60 percent and moderate-to-critical injury by 65 percent.

Air bags are also highly effective in reducing fatalities from frontal crashes. Between 1986 and March 1, 2000, air bags have saved an estimated 5,303 front seat occupants (4,496 drivers (85 percent) and 807 right front passengers (15 percent)).[2] Of the 5,303 people, 72 percent were unbelted and 28 percent belted. If observed seat belt use rates were to increase to 85 percent, the goal for 2000 set by DOT in 1997, the distribution of lives saved would change from 72 percent unbelted/28 percent belted to 60 percent unbelted and 40 percent belted.

The number of lives saved annually by air bags is continuing to increase as the percentage of air bag-equipped vehicles on the road increases. We estimate that air bags will save more than 3,200 lives annually in passenger cars and light trucks when all light vehicles on the road are equipped with driver and passenger air bags. This estimate is based on an

---

[1] For a history of NHTSA's rulemaking concerning air bags. see Appendix B, "Evolution of the Air Bag Provisions in Standard No.208."

[2] These estimates are based on comparisons of the frequency of front seat occupant deaths in vehicles without air bags and in vehicles with air bags. These life savings occurred predominantly in moderate and high speed crashes; i.e., those with a velocity change (delta V) above 20 mph.

anticipated fleet of vehicles meeting all of the requirements in this rule and on 1997 seat belt use rates (66.9 percent, according to State-reported surveys). However, if observed seat belt use rates were to reach 85 percent, the annual savings of lives due to air bags would be reduced to approximately 2,400.

C. Air Bag Risks and Fatalities

As the numbers above indicate, the attempt through seat belts and air bags to substitute a survivable event for an unsurvivable one or to substitute a less injurious event for a more injurious one is not always successful. While air bags are saving an increasing number of people in moderate and high speed crashes, they have occasionally caused fatalities, especially to unrestrained, out-of-position children, in relatively low speed crashes. As of April 1, 2000, NHTSA's Special Crash Investigation (SCI) program had confirmed a total of 158 fatalities induced by the deployment of an air bag. Of that total, 92 were children, 60 were drivers, and 6 were adult passengers, An additional 38 fatalities were under investigation by SCI on that date, but they had not been confirmed as having been induced by air bags.

Changes have already occurred that are reducing the number of persons killed by air bags. Some changes are behavioral. As a result of public education programs, improved labeling and media coverage, the public is much more aware of the dangers air bags pose to children in the front seat and to drivers sitting too close to the air bag and is taking steps to reduce those dangers. For example, more children are being put in the back seat. More short-statured drivers are moving back from the steering wheel.

Other changes are technological. First, as NHTSA noted in its report, "Air Bag Technology in Light Passenger Vehicles" (December 1999), the air bag outputs (i.e., pressure

rise rate and the peak pressure) were reduced significantly in many MY 1998 and later motor vehicles in comparison to the earlier vehicles.' Hence, the sled test option successfully expedited the depowering of existing air bags. While there are many means by which air bag aggressiveness can be reduced, reducing air bag outputs is a quick means of accomplishing this goal. The agency's analyses also show that, between MY 1997 and MY 1998, 50 to 60 percent of the vehicles in the fleet covered by the 1997 IR lowered the output of the driver-side air bag, while about 40 to 50 percent of the vehicles in that fleet lowered the output for the passenger side. Comparison of the data for MY 1997 and MY 1998 vehicles shows that, on average, the pressure rise rate in MY 1998 vehicles decreased about 22 percent for the driver air bag and 14 percent for the passenger air bags.

The data provided by the manufacturers also show that they have made significant changes in the design of their air bag systems other than the air bag pressure rise rate and peak pressure in their air bag designs, some over a period of many years.[4] Thus, depowering is not the only technological option for reducing risk. One change is the recessing of driver air bags so that the module is located farther away from the plane of the steering wheel, and thus farther from the driver. Although this feature was not common in the early 1990s, it is found in almost half of the MY 1997 and MY 1998 vehicles in the responses to the 1997 IR. Similarly, the air bag mounting location on the passenger side has also shown significant changes. Other features, such as cover tear patterns, tear pressure, fold patterns and the number and type of tethers, have

---

[3] The report indicates that some vehicle manufacturers had already depowered some air bags prior to the March 1997 rule.

[4] Again, these changes began before the March 1997 rule, but have accelerated since then

changed in recent years, all of which may have collectively contributed to the reduced aggressiveness of air bags.

To assess the impact of the redesigned air bags on the numbers of air bag-induced fatalities, we used the available SCI data. We compared the rate per million registered vehicles of air bag-induced fatalities for the first 27 months that MY 1998 redesigned vehicles were on the road with the rate of air bag-induced fatalities for the first 27 months that MY 1996-97 vehicles were on the road. We took this approach in an effort to ensure that the amount of exposure was comparable for both groups of vehicles. We found that the air bag-induced fatality rate for all MY 1998 vehicles is 66 percent less than the fatality rate for MY 1996-97 vehicles (0.48 for MY 1998 versus an average of 1.43 for MY 1996-97).

Part of this reduction is the result of changes in vehicle design and part is the result of changes in behavior; i.e., using seat belts more frequently, moving children into the back seat, and moving the driver's seat further back. We found evidence of behavioral changes by examining the front seat and rear seat distributions of all child passengers (age 0 to 12) in passenger cars, survivors plus fatalities, in the Fatal Analysis Reporting System (FARS) from 1995 through mid-1999. In cars with passenger air bags, the percentage of toddlers and infants riding in the back seat increased from about 70 percent in 1995 to about 90 percent in 1999.

D. Causes of Air Bag Fatalities

Several factors are common to air bag-induced fatalities. First, they involve air bags that do not meet the suppression or low risk deployment requirements of this rule. Second, the occupants are generally very close to an air bag module when the air bag begins to deploy during

a crash.[5] The one fact that is common to all persons who died is not their height, weight, gender, or age. Instead, it is the fact that they were very close to an air bag when it started to deploy. For some people, e.g., infants in rear-facing infant seats, this occurred because they were initially sitting very close to the air bag. For the other occupants, this typically occurred because they were not restrained by seat belts or child safety seats and moved forward during pre-crash braking

Closeness is a problem because, in order for an air bag to cushion an occupant's head, neck, chest and abdomen and keep the occupant from hitting the steering wheel, windshield or instrument panel, the air bag must move into place quickly. The force of a deploying air bag is greatest as the air bag begins to inflate. If occupants are very close to or in contact with the cover of an air bag that does not meet the low risk deployment requirements of this rule, they can be hit with enough force to cause serious injury or death when the air bag begins to inflate. This can be caused either by the cover as the air bag breaks out of the module (known as the "punch-out" effect) or by the unfolding and inflating air bag as it first conforms to the contours of the occupant and then moves rapidly into its fully-inflated shape (known as the "membrane" effect).'

In all of the 92 SCI confirmed fatalities involving children, the children were very close to the instrument panel when the air bag deployed. Because of their proximity, the children

---

[5] **Vehicle speed is not a causative factor. Most of the crashes involving fatalities that have been confirmed as air bag-induced occurred at relatively low speeds. If the passenger air bag had not deployed in those low speed crashes, the people would probably not have been killed or seriously injured.**

[6] **In general, a driver can avoid any serious air bag risks by sitting at least IO inches away from the air bag (measured from the breastbone to the center of the air bag cover) and by wearing a lap/shoulder seat belt. Teenage and adult passengers can avoid this risk by moving their seat as rearward as possible and wearing their seat belts. Even in a vehicle that does not have any air bags, children should ride in the rear seat whenever possible, since that is a significantly safer location.**

sustained fatal head or neck injuries from the deploying passenger air bag.

Eighteen fatally-injured infants were close to the air bag because they were in rear-facing infant seats installed directly in front of a passenger air bag. A rear-facing infant seat which is installed in the front seat of a vehicle with a passenger air bag will almost always position the infant's head very close to the passenger air bag. Several other infants were being held in the lap of a passenger.

All but a few of the 74 fatally-injured older children were not using any type of restraint.' Of those who were restrained, most were not correctly restrained. The non-use or improper use of occupant restraints allowed the vast majority of these children to move forward during pre-impact braking' before the actual crash. As a result, they were very close to the air bag when it deployed.

As in the case of the children fatally injured by air bags, the key factor regarding the confirmed deaths of adults has been their closeness to the air bag when it deployed. The most common factor that allowed them to become very close to the air bag was the failure to use seat belts. Only 18 of the 60 drivers are known to have been properly restrained by lap and shoulder belts at the time of the crash.

II. The Rule, Its Rationale, and Its Implementation

A. Key Provisions of the Rule

Early Agency Efforts to Reduce Air Bag Risks

---

[7] NHTSA notes that almost all of the 68 fatally-injured children were I - 7 years old.

[8] Pre-impact braking was a factor in a very high percentage of crashes resulting in the deaths of the older children.

Since the early 1990s, NHTSA has been taking steps to induce changes in behavior and technology to reduce the risk of such deaths and serious injuries to children and small adult drivers, especially when they are out-of-position.[9] We focused our initial efforts to reduce air bag risks on a public education campaign to alert the public about the dangers of air bags to children in general and to infants in particular. We urged parents to place their children always in the back seat and to ensure that they were always properly restrained. We required informative, text-only, warning labels to be placed in new motor vehicles and on child restraints.

1996 Comprehensive Plan for Addressing Air Bag Risks

To address the problems that arose with the air bags installed in many motor vehicles, the agency announced a comprehensive plan in November 1996. The plan set forth an array of immediate, interim and long-term measures. The immediate and interim measures focused on behavioral changes and relatively modest technological changes. The long-term measures focused on more significant technological changes, i.e., advanced air bag technologies. The immediate steps included expanding efforts to persuade parents to place their children in the rear seat; requiring new labels with eye-catching graphics and colors and strong, clear warning messages; extending the period of time for permitting the installation of original equipment on-off switches in new vehicles which either lacked a rear seat or had a rear seat too small to permit the installation of a child restraint system; and permitting the installation of retrofit on-off switches in vehicles-in-use to protect people in at-risk groups. Because of the lead time needed

[9] Even before the 1990's, the issue of air bag-induced risks to out-of-position occupants was addressed by the agency in its rulemaking and research related to air bags. For a history of those earlier activities, see Appendix B at the end of this preamble.

to develop and install advanced air bag technologies, NHTSA announced plans to propose an interim measure to accelerate manufacturer efforts to redesign their air bags. In the long term, the agency said that it would conduct rulemaking to require the installation of advanced air bags.

Contribution of Behavioral Changes and the Current. Redesigned Air Bags to Reducing Air Bag Risks

To implement the interim phase of the comprehensive plan and speed the redesigning and recertifying of air bags to reduce the risks to out-of-position occupants, we amended Standard No. 208, Occupant Crash Protection, 49 CFR 571.208, to establish a temporary option under which vehicle manufacturers could certify their vehicles based on a 48 km/h (30 mph) unbelted sled test using a 50th percentile adult male dummy, instead of the 48 km/h (30 mph) unbelted rigid barrier crash test using that dummy. 62 F.R. 12960; March 19, 1997.

Available data indicate that the redesigned air bags, together with behavioral changes, such as placing more children in the back seat, have reduced the risks from air bags for the at-risk populations. Although these real-world data reflect only about two years of field experience with redesigned air bags, they preliminarily indicate that the redesigned air bags in model year (MY) 1998 and 1999 vehicles provide the same level of frontal crash protection as that provided by earlier air bags.

While the redesigned air bags in current motor vehicles have contributed to the reduction in the risk of air bag-induced injuries, they can still cause death or serious injury to unrestrained occupants, We selected the provisions adopted in this rule to ensure that future air bags provide more frontal crash protection, and reduce risk further, than either the current redesigned air bags or air bags that would have been minimally compliant with the sled test.

Transportation Equity Act for the 21st Century

The Transportation Equity Act for the 21st Century (TEA 21), enacted by Congress in June 1998, requires us to issue a rule amending Federal Motor Vehicle Safety Standard No. 208, Occupant Crash Protection:

> to improve occupant protection for occupants of different sizes, belted and unbelted, under Federal Motor Vehicle Safety Standard No. 208, while minimizing the risk to infants, children, and other occupants from injuries and deaths caused by air bags, by means that include advanced air baas.

(Emphasis added.)

TEA 21 specifies that its twin goals are to be accomplished by means that include advanced air bag technologies. Although these technologies are beginning to be incorporated in some new vehicles, many aspects of those technologies are still undergoing development and refinement today.

The rule is required to be consistent with section 30111 of Title 49. Section 30111 requires that, among other things, Federal motor vehicle safety standards be practicable, meet the need for motor vehicle safety, and be stated in objective terms.

Under TEA 21, we were to issue the rule by September 1, 1999, unless we determined that the rule could not be issued by that date. The many issues in this rulemaking led us to make such a determination. We notified Congress of this determination in a letter dated August 3, 1999. Therefore, under TEA 2 1, we were required to issue the rule by March 1, 2000.

TEA 21 addresses various other issues, including the effective date and phase-in for the requirements adopted in this rule, as well as the opportunity to earn phase-in credits through early compliance. A complete discussion of TEA 21's provisions is included in the 1998 notice

of proposed rulemaking (NPRM). See 63 F.R. 49958 at 49961; September 18, 1998.

The Gathering of Information and Soliciting of Comments for this Rulemaking to Reduce Air Baa Risks Further

Since 1996, the agency has been carefully laying the groundwork for completing the implementation of its comprehensive plan by issuing this rule. We have made extensive efforts to gather information and solicit public comments that would help us identify and adopt a sensible, effective array of requirements for increasing protection and minimizing risk. In February 1997, we held a public technical workshop on advanced air bag technologies. In December 1997, we sent an Information Request (IR) to the vehicle manufacturers to obtain detailed information concerning their changes in air bag design during the 1990s. In April 1998, Jet Propulsion Laboratories completed, at NHTSA's request, a report titled "Advanced Air Bag Technology Assessment." In mid-1998, Congress made the judgment that advanced air bags should be required. It enacted TEA 21 mandating that we amend our occupant protection standard to require vehicle manufacturers to improve the protection provided by air bags and to reduce the risks associated with them by means that include advanced air bag technologies. Although TEA 21 required only that we seek public comment once on our proposals before taking final action, we asked for public comment twice. We issued a notice of proposed rulemaking (NPRM) in September 1998, and a supplemental notice of proposed rulemaking (SNPRM) in November 1999. To help us thoroughly explore the issues, we proposed or discussed in those two notices a variety of alternatives and posed a wide-ranging array of questions. Based on the information we received in response to the 1997 IR, we completed a report titled "Air Bag Technology in Light Passenger Vehicles" in December 1999.

Changes to Our Initial Proposals in Response to Information and Comments

We carefully considered the information we gathered and the comments we received on the 1998 NPRM and appropriately adjusted our proposals in the 1999 SNPRM to respond to those materials. For example, based on the public comments on the NPRM regarding the type and number of tests needed to meet the risk minimization goals of TEA 21, we significantly reduced the number of those tests when we issued the SNPRM.

Further, there was a substantial shift between the NPRM and SNPRM in the issues that needed to be resolved in determining which test should be specified to promote the improvements required by TEA 21 in the ability of vehicles to protect unbelted people in moderate to high speed crashes, i.e., those that are potentially fatal. In the NPRM, the primary issue was whether we should (1) retain the unbelted sled testing option, or (2) delete that option, leaving the existing 48 km/h (30 mph) unbelted rigid barrier crash testing provision as the sole basis for certification compliance with Standard No. 208's requirements regarding the protection of unbelted occupants."

In the SNPRM, the primary issue regarding unbelted testing was what type of unbelted crash test should be specified, and at what top speed. We proposed several alternatives. One alternative was to test unbelted protection in an improved unbelted rigid barrier crash test with a top speed within the range of 40 to 48 km/h (25 to 30 mph). We said that if we issued a rule

---

[10] As explained in greater detail below, this rule transforms unbelted rigid barrier testing under Standard No. 208 through the adoption of new and more stringent injury criteria, a new small adult female dummy seated far forward of where the existing mid-sized adult male dummy is placed in compliance testing, a new belted offset test to ensure that sensors work properly in crashes that are not similar to a crash into a rigid barrier and the establishment of complementary risk reduction tests that will affect how manufacturers comply with the unbelted rigid barrier test in the future.

setting the maximum speed at 40 km/h (25 mph), we might also increase the maximum speed of the belted rigid barrier test from the current 48 km/h to 56 km/h (30 to 35 mph). Another alternative was to test unbelted protection in an unbelted offset deformable barrier test with a maximum speed to be established in the rule within the range of 48 to 56 km/h (30 to 35 mph).

In addition, we sought comment on other possibilities. One was to issue "a final rule temporarily reducing the maximum speed for the unbelted rigid barrier test to 40 km/h (25 mph) (or some other speed, e.g., 44 km/h (27.5 mph))" and then returning "it to 48 km/h (30 mph) after an appropriate period of time, e.g., after the TEA 21 phase-in." Another was "to temporarily permit relaxed injury criteria performance limits (e.g., 72 g chest acceleration limit instead of 60 g chest acceleration limit) in unbelted rigid barrier tests between 25 mph and 30 mph."

Finally, we proposed in the SNPRM that the agency would not test at a speed of less than 29 km/h (18 mph) under the unbelted rigid barrier test alternative, and that the agency would not test at a speed of less than 35 km/h (22 mph) under the unbelted offset deformable barrier test alternative. This was not only a departure from the proposal in the NPRM, but also from prior agency practice. In the NPRM, we had proposed to test at any speed up to the maximum test speed. One reason for this change was that we wanted to be sure that the standard did not push deployment thresholds downward, i.e., cause air bags to be deployed at lower speeds than are appropriate for maximum occupant protection.

Public Comments on the SNPRM

The commenters on the SNPRM, including vehicle manufacturers, air bag manufacturers, insurance companies, public interest groups, academia, and the National Transportation Safety Board (NTSB), generally agreed with most aspects of that document. For example, the

commenters agreed with the agency's proposals to reduce air bag-induced risks by specifying that driver air bags deploy in a low-risk manner in low speed crashes and the passenger air bags either deploy in that manner or turn off in the presence of young children.

With respect to our proposals for improving occupant protection, most commenters supported replacing the unbelted sled test with an unbelted rigid barrier crash test. The vehicle manufacturers, which had opposed a rigid barrier test in their comments on the NPRM, agreed to a return to such a test.

However, while there was a convergence of opinion as to the type of unbelted test, there was a sharp difference of opinion among the commenters on the SNPRM regarding the maximum speed for the unbelted rigid barrier crash test. Several safety advocacy and consumer groups urged that the maximum speed be kept at 48 km/h (30 mph). The vehicle manufacturers, air bag suppliers, an insurance industry safety organization, and several other organizations, believing that a maximum test speed of 48 km/h (30 mph) could make significant repowering necessary, urged that the maximum speed be set at 40 km/h (25 mph). They urged further that the speed be maintained at that level pending analysis of field experience with the air bags installed in motor vehicles during that period. For similar reasons, the NTSB also urged a maximum test speed of 40 km/h (25 mph).

There were also significant differences of opinion regarding our proposals about the provision providing a due care defense against findings of noncompliance with the air bag requirements of Standard No. 208 and about the wording of the statements regarding air bag-induced risks on the proposed vehicle labels.

We note that a substantial number of comments were submitted to the docket for the

SNPRM after the comment closing date. In preparing this rule, we have considered all comments placed in the docket on or before April 28, 2000.

The Development of a Data-Driven Rule

Before we made decisions on which provisions should be included in this rule to improve air bag performance as required by TEA 21, we carefully considered the available information and the public comments, the underlying safety problems, the performance of air bag systems in current motor vehicles, the ability (including lead time needs) of vehicle manufacturers to achieve better performance in future motor vehicles, the air bag technology (including advanced air bag technology) currently available or being developed, the cost of compliance, and other factors. Because the comments on the SNPRM focused on the alternatives for improving the protection provided by air bags, we were particularly careful in considering the comments concerning the costs, benefits and risks associated with each of those alternatives.

The requirements in today's rule for improving protection and minimizing risk are challenging and will push the vehicle manufacturers to make needed safety improvements in air bag performance. Our decisions regarding the selection of those requirements was based on available test data and analysis, and our informed judgment about the best way of implementing the requirements of TEA 21.

The Principal Provisions of the Rule

The rule will improve protection and minimize risk by requiring new tests and injury criteria and specifying the use of an entire family of test dummies: the existing dummy representing 50th percentile adult males, and new dummies representing 5th percentile adult females, six-year old children, three-year old children, and one-year old infants. With the

addition of those dummies, our occupant crash protection standard will more fully reflect the range in sizes of vehicle occupants. As noted above, most aspects of this rule are supported by most commenters on this rulemaking, including vehicle manufacturers, air bag manufacturers, insurance companies, public interest groups, academia, and the NTSB.

The rule will be phased in during two stages. The first stage phase-in requires vehicles to be certified as passing the unbelted test requirements for both the 5th percentile adult female and 50th percentile adult male dummies in a 40 km/h (25 mph) rigid barrier crash, and belted test requirements for the same two dummies in a rigid barrier crash with a maximum test speed of 48 km/h (30 mph). In addition, the first stage requires vehicles to include technologies that will minimize risk for young children and small adults.

The second stage phase-in requires vehicles to be certified as passing the belted test requirements for the 50th percentile adult male dummy at 56 km/h (35 mph). This requirement will ensure improved protection for belted occupants.

Risk Minimization Provisions Implemented During First Stage Phase-in

During the first stage phase-in, from September 1, 2003 to August 3 1, 2006, increasing percentages of motor vehicles will be required to meet requirements for minimizing air bag risks, primarily by either automatically turning off the air bag in the presence of young children or deploying the air bag in a manner much less likely to cause serious or fatal injury to out-of-position occupants. If they so wish, manufacturers may choose to use a combination of those two approaches.

Manufacturers that decide to turn off the passenger air bag will use weight sensors and/or other means of detecting the presence of young children. To test the ability of those means to

detect the presence of children, the rule specifies that child dummies be placed in child seats that are, in turn, placed on the passenger seat. It also specifies tests that are conducted with unrestrained child dummies sitting, kneeling, standing, or lying on the passenger seat.

The ability of air bags to deploy in a low risk manner will be tested using child dummies on the passenger side and the small adult female dummy on the driver side. For manufacturers that decide to design their passenger air bags to deploy in a low risk manner, the rule specifies that unbelted child dummies be placed against the instrument panel. This location was selected because pre-crash braking can cause unrestrained children to move forward into or near that position before the air bag deploys. The air bag is then deployed. The ability of driver air bags to deploy in a low risk manner will be tested by placing the 5th percentile adult female dummy against the steering wheel and then deploying the air bag.

Protection Improvement Provisions Implemented During First Stage Phase-in

In addition, the vehicle manufacturers will be required to meet a rigid barrier crash test with both unbelted 5th percentile adult female dummies and unbelted 50th percentile adult male dummies. The unbelted rigid barrier test replicates what happens to motor vehicles and their occupants in real world crashes better than the current sled test does. The maximum test speed for unbelted dummy testing will be 40 km/h (25 mph).

Our decision to set the maximum test speed for unbelted dummy testing at 40 km/h (25 mph) is being issued as an interim final rule. We conclude that is the appropriate test speed for at least the TEA 21 implementation period (MY2004-2007). That speed will provide vehicle manufacturers with the flexibility they need during that period to meet the technological challenges involved in simultaneously improving protection and minimizing risk. To achieve

those twin goals, the manufacturers will have to comply with the wide variety of new requirements using an array of new dummies during this near-term time frame.

However, we draw no final conclusion about the appropriateness of that test speed in the longer run. At this time, we cannot assess whether the uncertainty about the manufacturers' ability to improve protection further and minimize risk simultaneously will persist beyond the TEA 21 implementation period. In addition, while we believe that it is unlikely that a 40 km/h (25 mph) maximum test speed will lead to a reduction in high speed protection, we cannot rule out that possibility. If manufacturers were to engage in significant depowering, it could result in lesser crash performance for teenage and adult occupants. On the other hand, even if current levels of real world protection were only maintained, rather than improved, the marginal benefits of a 48 km/h (30 mph) unbelted maximum test speed would be significantly diminished or eliminated.

To help resolve these issues and concerns, we are planning a multi-year effort to obtain additional data. The activities comprising that effort are described in the section below entitled, "Monitoring of Implementation and Field Experience; Research and Technology Assessment." Based on the results of those information gathering and analysis efforts, we will make a final decision regarding the maximum test speed for unbelted dummy testing in the long run, after providing opportunity for informed public comment.

There are still other additions to Standard No. 208. To ensure that vehicle manufacturers upgrade their crash sensing and software systems as necessary to prevent late air bag deployments in crashes with soft pulses, vehicles will be required to meet an up-to-40 km/h (25 mph) offset deformable barrier test using belted 5th percentile adult female dummies. A late air

bag deployment would allow enough time for an unrestrained occupant to move forward into the steering wheel or instrument panel during a crash before the air bag deploys. Thus, the occupant would be in contact with or very close to the air bag module when the air bag deploys, creating a risk of severe or fatal injury. In addition, the 5th percentile female dummy is added to the 48 km/h (30mph) belted rigid barrier test.

Provision Implemented During Second Stage Phase-in

During the second stage phase-in, from September 1, 2007 to August 31, 2010, the maximum test speed for the belted rigid barrier test will increase from 48 km/h (30 mph) to 56 km/h (35 mph) in tests with the 50th percentile adult male dummy only. As in the case of the first-stage requirements, this second-stage requirement will be phased in for increasing percentages of motor vehicles. We did not include the 5th percentile adult female dummy in this requirement because we have sparse information on the practicability of such a requirement. As noted below, we will initiate testing to examine this issue and anticipate proposing increasing the test speed for belted tests using the 5th percentile adult female dummy to 56 km/h (35 mph), beginning at the same time that the belted test must be met at that speed using the 50th percentile adult male.

Schedule for Implementation

We have changed the date on which the implementation of this rule begins from September 1, 2002, as proposed in the SNPRM, to September 1, 2003. This gives vehicle manufacturers as much lead time as TEA 21 allows for the first stage phase-in. TEA 21 does not permit a later starting date. This change will give the manufacturers a lead time of more than 3 years for vehicles produced during the first year (Model Year (MY) 2004) of that phase-in and

more than 6 years for vehicles produced during MY 2007, the first MY in which vehicle manufacturers will be required to manufacture all of their vehicles in compliance with the first stage requirements without the aid of credits.

We changed the starting date for the first stage in part because of the breadth of the challenges that the vehicle manufacturers will be required to meet during that stage. They will need to certify their vehicles to an unbelted barrier test instead of a sled test. Moreover, they will need to meet this test for the new 5th percentile adult female dummy seated all the way forward as well as for the existing 50th percentile adult male dummy seated in the mid-track position. They will also need to meet a new belted offset deformable barrier test using the 5th percentile adult female dummy and a belted rigid barrier test for both 50th percentile adult male dummies and 5th percentile female dummies. For all of these tests, they will need to meet new injury criteria performance limits. Finally, the vehicle manufacturers will need to certify their vehicles to an array of test requirements to minimize the risk to infants, children, and other occupants from injuries and deaths caused by air bags using the 5th percentile adult female dummy and the child dummies. The starting date of September 1, 2003 will give the manufacturers additional time to gain experience with the new dummies, final specifications for which have only recently been established.

Further, the longer lead time for the first stage phase-in will also promote technological innovation regarding ways of minimizing risks. It will give vehicle manufacturers more time to complete development and testing of the advanced technologies they plan to use. Further, we are aware that suppliers are continuing work on additional technologies. The additional time will enable the manufacturers to explore further using some of these additional technologies.

Rationales for Risk Minimization Requirements

The agency drafted the risk minimization requirements to give vehicle manufacturers a broad choice among those advanced air bag technologies that can be used either to turn air bags off in appropriate circumstances or cause air bags to deploy in a low risk manner.[11] Thus, the vehicle manufacturers will have the freedom to choose from a variety of available technological solutions or to innovate by developing new ones if they so desire.

We estimate that if advanced air bag technologies (suppression and low risk deployment) are 100 percent reliable, they could have eliminated 95 percent of the known air bag fatalities that have occurred to date in low speed crashes. For example, weight sensors can be installed in the passenger seat so that the passenger air bag is turned off when children, from infants up to the typical 6-year-old, are present. The use of weight sensors for that purpose should essentially eliminate the risk of air bag-induced fatal injuries for children in that size and age range. Based on available data, it does not appear that turning air bags off for those young children would result in the loss of any benefits. There is an element of uncertainty about the level of reliability and effectiveness of the suppression for children from 0 to 6 years old and low risk deployment designs that will be actually installed in vehicles. We also note that we do not currently have a dummy suitable for assessing the effectiveness of suppression and low risk deployment for children ages 7 - 12 (See the section below entitled, "Future Rulemaking Plans.") Our decision concerning the maximum test speed for the unbelted rigid barrier test reflects, in part, these

---

[11] The rule also establishes very general performance requirements for dynamic automatic suppression systems (DASS) and a special expedited petitioning and rulemaking process for considering procedures for testing advanced air bag systems incorporating a DASS. In response to comments, modifications have been made to address concerns about confidentiality and timing.

uncertainties and limitations.

The availability of advanced air bag technologies for minimizing risks is not just a theoretical possibility. Vehicle manufacturers are very actively working on completing their development and testing of weight sensor systems so that they will be ready for installation for the passenger air bags in their motor vehicles. Installation could begin as early as the next model year.[12] Means of reducing risk for drivers, including dual-stage air bags coupled with sensors for driver seat belt use and driver seat position, are already being installed in some vehicles. For a description of advanced technologies and a partial listing of current models equipped with one or more types of those technologies, see Appendix D, "Advanced Technologies for Improving Air Bags."

Rationales for Protection Improvement Requirements

Replacing the Unbelted Sled Test with the Unbelted Rigid Barrier Crash Test

The agency has decided to delete the sled test option and retain the unbelted rigid barrier crash test provision for the reasons explained in the NPRM and SNPRM. Among those reasons is that a crash test replicates how vehicle structures and air bag systems work together in real world crashes. A sled test cannot do that because while the vehicle is quickly decelerated in such a test, it never crashes into anything. As a result, the sled test cannot take into account the ability of a motor vehicle's structure to manage crash energy. Further, the sled test uses a generic crash pulse instead of the individual crash pulse of the particular vehicle being tested, and deploys all

[12] The MY 2001 Ford Windstar will, according to a report in the April 24, 2000 edition of Automotive News, be equipped with an advanced air bag system "designed to prevent the deployment of the front passenger airbag when sensors determine the passenger's weight is less than 45 pounds."

air bags at a fixed time during the event rather than having that decision made by the crash sensing system of the vehicle.

Selection of 40 km/h (25 mph) as Too Speed for Unbelted Rigid Barrier Test

In developing today's rule, we gave serious consideration to specifying 40 km/h (25 mph) as the maximum speed for the unbelted rigid barrier test for an initial period (so that vehicle manufacturers could focus during that period on risk minimization) and then phasing-in a 48 km/h (30 mph) unbelted test speed in the 2008 through 2010 model years. Our initial inclination to increase the maximum test speed to 48 km/h (30 mph) during the second of two phase-ins reflected several considerations. First, our testing of vehicles with redesigned air bags indicated that the vast majority of current vehicles can meet that test using 50th percentile adult male dummies. Those test results were not rebutted by any significant test data provided by the motor vehicle manufacturers or others. Therefore, the record did not support the argument by the motor vehicle manufacturers and others that a 48 km/h (30 mph) test using a 50th percentile adult male dummy would require any kind of general "repowering" of air bags.[13] Second, we concluded

---

[13] Based on NHTSA crash tests (including tests of some vehicles with stiff crash pulses) of a variety of types and sizes of vehicles in the current new vehicle fleet, we concluded that the air bags in the vast majority of current vehicles would pass a 48 km/h (30 mph) crash test using a 50th percentile adult male dummy with much the same compliance margins as before. Thus, we concluded that more power was not needed for those vehicles to pars that test with that dummy. Further, the fact that some current vehicles with stiff pulses meet the injury criteria suggested that vehicle manufacturers might not have to repower air bag systems in other stiff pulse vehicles in order to meet the criteria.

More fundamentally, we reasoned that air bags that currently have enough power to meet the injury criteria using the 78 kg (I 72 lb.) 50th percentile adult male dummy would not need more power to meet the criteria using the much lighter 50 kg (110 lb.) 5th percentile adult female dummy. Our tests indicate that the primary problem for the small female dummy in those current vehicles that do not satisfy the injury criteria in a 48 km/h (30 mph) test with the 5th percentile adult female dummy is that the dummy experiences too much force in the neck or chest area. We said further that the solution for the smaller, lighter female dummy would not be to put additional power into the bag. Not only would that step be unnecessary to protect the 50th percentile adult male dummy, but also it would be likely to exacerbate the problems with the small female dummy. We concluded that the solution would be to redesign the air bag system- - using recessed air bags and new sensors, multiple inflation levels, fold patterns, bias flaps, etc.- - to assure compliance for both the 5th percentile adult female dummy and 50th adult male dummy.

that air bags could be designed to meet a 48 km/h (30 mph) test with both 5th percentile adult female dummies and 50th percentile adult male dummies without increasing risks to out-of-position occupants.[14] Third, we believed that a specific requirement to return eventually to a 48 km/h (30 mph) test should be adopted to ensure that vehicle manufacturers did not engage in significant additional depowering of air bags, or make them substantially smaller, which would reduce their protectiveness to occupants in high speed crashes." We believed then that there could be an economic incentive to install air bags that were minimally compliant with a 40 km/h (25 mph) test.

After further examination of the issues and the information before us, and an assessment of the areas of uncertainty about simultaneously improving protection and minimizing risk, we have concluded that the adoption of a 48 km/h (30 mph) unbelted requirement would not be in the best overall interest of safety. We have decided instead to set the maximum test speed for the unbelted rigid barrier crash tests at 40 km/h (25 mph) as an interim final rule. We selected that

---

[14] We noted that tests of some current production vehicles demonstrate that they incorporate the designs and technologies necessary to enable them to comply at 48 km/h (30 mph) on both the driver and passenger sides with both dummies. These technologies include improved air bag folding, bias flaps, and internal baffles/tethers. We believed that manufacturers could add other measures such as dual-stage inflators, seat position sensors, recessed air bag modules, and better energy-absorbing steering columns. If any vehicle manufacturer wished to do so, it could also develop and provide chambered, dual-stage air bags that are designed to fill fully only an inner chamber of the air bag, instead of the entire air bag, when the driver seat is near the full forward adjustment position on the seat track.

[15] We noted that the difference between a 40 km/h (25 mph) and a 48 km/h (30 mph) crash is significant. The significance does not lie in the 20 percent increase in speed, but in the 44 percent increase in crash energy. It is because of that increase in crash energy that the risk of serious or fatal injury is significantly higher at 48 km/h (30 mph) than at 40 km/h (25 mph). Further, a maximum test speed of 48 km/h (30 mph) represents a higher percentage of the crashes that produce serious or fatal occupant injuries. As a result, if air bags were designed only to minimally meet a 40 km/h (25 mph) crash test, many occupants, particularly larger occupants, would not be adequately protected in higher speed crashes. We estimated that 248 to 413 lives could be lost annually if manufacturers did only the minimum required of them by a 40 km/h (25 mph) crash test requirement.

test speed based on several factors.

First, particularly given the risks that the first generation of air bags posed to out-of-position children and small adult females, and the reaction of the public to those risks, it is very important that advanced air bags be properly designed from the very beginning. We note that air bags, by their nature, present a potential for safety trade-offs not presented by other safety features, That is, while air bags dissipate crash energy for most occupants when they interact with them when fully inflated, the energy released during deployment could be injurious to out-of-position occupants in their interaction with an inflating air bag. This interaction of an occupant and a deploying air bag can be a source of serious injury or death. In contrast, other safety features typically just dissipate energy when occupants interact with components in the vehicle interior in crashes; they do not add energy. Because of this potential for death and injury, we want to be cautious in how far and how fast vehicle manufacturers are required to advance the state of advanced air bag technologies in their vehicles.

Since a significant percentage of current vehicles can already satisfy the new unbelted barrier crash test at 40 km/h (25 mph) with both the 5th percentile adult female dummy and the 50th percentile adult male dummy, we conclude that setting the maximum speed at that level will help vehicle manufacturers to focus their resources and compliance efforts during the first stage on meeting the risk reduction requirements. We want to continue the progress already made in using technological means for reducing air bag-induced risks.

While the manufacturers' resources for dealing with air bags, as well as all the other engineering issues associated with future motor vehicles, are extensive, there are limits to how much can be done at any one time. We need to consider the variety and complexity of changes

in air bag testing and technology that will be required by this rule. As we noted above in the discussion of the implementation schedule, the array of new requirements that the manufacturers will have to meet in the first stage is challenging. We are requiring the use of a new test dummy (the 5th percentile adult female) in high speed tests, adding a new test (offset belted), adding new neck injury criteria, and making existing injury criteria more stringent (chest deflection). We are also adding an entire new series of risk minimization tests, which will require manufacturers to install air bag suppression systems or low-risk deployment systems, or both.

We are particularly concerned about the difficulties of trying to meet the unbelted rigid barrier test at 48 km/h (30 mph) with both adult dummies while simultaneously trying to reduce the risks of air bag-induced injuries and deaths. As noted above, the unbelted rigid barrier crash test specified by this rule for the future is an improved test that differs fundamentally from the unbelted rigid barrier test that Standard No. 208 has specified in the past. In the past, the Standard specified only that test and the belted rigid barrier test, and used only one dummy, the 50th percentile adult male dummy. The injury criteria for the unbelted rigid barrier crash test did not evaluate the potential for neck injuries and allowed even greater chest deflection. The Standard specified no other requirement (such as one for out-of-position testing) that had the effect of making it more difficult to achieve compliance with the unbelted rigid barrier test.

In the future, however, greater efforts will be needed to comply with that test because manufacturers will be required to meet a greater variety of requirements.

The unbelted rigid barrier test will have to be met using new or more stringent injury criteria with the new 5th percentile adult female dummy as well as the existing 50th percentile adult male dummy. The necessity of meeting those criteria with the 5th percentile adult female

dummy placed in vehicle seats that have been moved all the way forward will add considerably to the challenge of meeting that test. For both belted and unbelted tests, we are adopting improved injury criteria to assure greater protection by air bags in high speed crashes. More specifically, we are changing the way in which the risk of head injuries is measured, adding a new neck injury measure that accounts for the combination of flexion, extension, tension, and compression, and reducing the amount of allowable chest deflection.

Further, efforts to comply with the unbelted rigid barrier test will be affected by the simultaneous need to comply with the risk reduction requirements. In the future, air bags will be explicitly required to be tested for their potential to harm vulnerable occupants as well as offer protection in high-speed crashes.

While advanced air bag technologies will facilitate simultaneously achieving the goals of improving protection and minimizing risk, we cannot forecast the pace of development of those technologies. Setting the maximum speed at 40 km/h (25 mph) will give vehicle manufacturers greater flexibility to choose among and gain experience with advanced air bag technologies. It will also give NHTSA a chance to gather data about the performance of vehicles using advanced air bag technologies. We want the installation of advanced air bag technologies by the vehicle manufacturers across the full spectrum of their fleets to be done correctly--the first time.

Accordingly, we believe that it is preferable to take an approach that best assures improved air bag performance for occupants of all sizes, without compromising efforts to minimize the risks of injury to vulnerable occupants, including children and short women seated very close to air bags, and out-of-position occupants. Such an approach is one that involves the least uncertainty for the occupants who have been most at risk. In other words, as long as the

manufacturers improve the already substantial overall level of air bag protection provided by current redesigned air bags, the uncertainty involved in meeting the challenge to improve high-speed protection and minimize risk simultaneously is best resolved at this point in favor of minimizing risk. This is especially true in the early stages of the introduction of advanced air bag technologies. Compared with a 48 km/h (30 mph) unbelted rigid barrier test, a 40 km/h (25 mph) unbelted rigid barrier test presents less chance of inadvertently increasing risks to out-of-position occupants.

Second, while we believe that it should eventually be possible for vehicles to provide protection for both small females and mid-sized males in a 48 km/h (30 mph) unbelted test without compromising efforts to minimize the risks of serious air bag-induced injuries, there are unresolved issues. Our laboratory tests and knowledge of advanced technologies do not tell us how or when developments might reach that point. They also do not provide us with a full picture of the real world consequences of adopting that test speed. Thus, this type of information, by itself, is not necessarily sufficient to enable us to determine whether adopting that speed is worthwhile, much less needed, from a safety standpoint.

We assessed the relative merits of maximum test speeds of 40 km/h (25 mph) and 48 km/h (30 mph) in light of the initial advanced air bag systems that manufacturers will introduce over the next several years. Based on that assessment, we are concerned that the need for vehicle manufacturers to take steps to enable them to certify to a 48 km/h (30 mph) unbelted test could create difficulties in improving protection and minimizing risks for the wide range of occupants and crashes in the real world. A good example of how these potential problems might occur relates to how a vehicle manufacturer might use a dual-stage air bag to meet the goals of this

rulemaking.

One strategy for meeting an unbelted 48 km/h (30 mph) barrier requirement for both 5th percentile adult females and 50th percentile adult males would be to use the first stage inflation level for the 5th percentile adult female and the second stage inflation level for the 50th percentile adult male. However, under that strategy, the need to certify to the 48 km/h (30 mph) barrier test for the 5th percentile adult female dummy would require a relatively faster inflation in the first stage. Because that dummy will be placed in a vehicle seat moved all the way forward, the air bag will have to deploy especially quickly to provide protection. The use of a relatively faster first stage would conflict with the strategy of using as benign a first stage inflation level as possible in lower speed crashes to reduce risks to out-of-position occupants. Alternatively. the vehicle manufacturer could use the second stage inflation level for both the 5th percentile adult female and 50th percentile adult male dummies. While this strategy might be a good one for passing a rigid barrier test, in which the dummy does not move forward much before deployment, it might not be a good strategy for high speed real world crashes in which small adult females, who already sit close to the air bag, and unrestrained children move considerably closer as a result of pre-crash braking.

While we believe that dual-stage inflators represent a significant improvement over single level inflators, it is important to recognize that they have limitations. Some of these limitations could be overcome by inflators with more than two stages. However, this would add greater complexity, including additional gray zones. While these and other more advanced technologies, such as chambering and real time occupant position sensing, may become available in the future, we want to be cautious about the possibility of inducing manufacturers to install more advanced

technologies before those technologies are fully ready. For example, vehicle manufacturers should gain real world experience with dual-stage inflators before they adopt inflators with additional stages. Also, in areas in which there is uncertainty as to what strategies might be best for safety, such as the specific performance characteristics for dual-level inflators, we want to be careful about adopting requirements that might be inappropriately design restrictive in making it difficult for vehicle manufacturers to design their air bags so that they perform well both in rigid barrier tests and in the wide range of real world crashes.

Third, we are also aware that the vehicle manufacturers need design flexibility to address issues regarding performance in real world crashes not directly replicated by Standard No. 208's tests.

As we have discussed on many occasions, one of the greatest limitations of non-advanced air bags is that they typically deploy in the same manner regardless of such factors as crash severity or occupant size, weight or position. In other words, they are non-adjusting, one-size-fits-all air bags. One of the principal strategies for improving air bag performance is to provide different levels of deployment for different situations.

The most basic redesigned advanced air bags would allow different types of deployment to suit different crash situations. These air bags would have a dual-level inflator instead of a single-level inflator. Some vehicles already have such inflators. With two levels of inflation, the vehicle manufacturer can design the air bag system so that the level of inflation is dependent on such factors as crash severity, size and weight of the occupant, and position of the occupant. For example, the high level of inflation might be selected for high speed crashes and the low level of inflation for low speed crashes. Of course, the ability to select an inflation level based on these

various factors would depend on the existence of sensors that provide relevant information about the above factors.

Successful implementation of air bags designed to vary their performance in response to sensed differences in crash severity or other conditions presents a challenge to the manufacturers in that these air bags have “gray” or transition zones, i.e., ranges of conditions in which the air bag changes from one level of performance to another. At very low speeds, there will be uncertainty within a gray zone about whether the air bag will deploy or not deploy and at higher speeds, there will be uncertainty about which level of performance will be triggered. For example, there will be a gray zone of crash severity in which there is uncertainty whether a dual-stage air bag will deploy only its lowest powered stage or both stages.

Particularly given the importance we place on vehicle manufacturers “getting it right” the first time with advanced air bags, we believe it is appropriate for them to initially introduce relatively simple advanced systems, such as ones incorporating dual-level inflators and sensors that provide basic information about one or more of the factors identified above. While we believe that more complex systems, incorporating such features as several levels of inflation, chambering (e.g., creating, in effect, a small bag inside a larger bag) and real time occupant position sensing, offer promise of even greater benefits, there are significant uncertainties regarding the feasibility and thus availability of such systems, particularly the dynamic position sensing systems.

Fourth, a 40 km/h (25 mph) maximum test speed gives vehicle manufacturers more flexibility to address the greater compliance problems associated with vehicles, e.g., SUVs, with particularly stiff crash pulses. Since unbelted occupants moving forward in frontal crashes of

these vehicles will have to be engaged more quickly than in vehicles with softer crash pulses, the task of designing air bag systems in stiff pulse vehicles is significantly more challenging. Our test experience with LTVs using the 5th percentile adult female dummy is very limited. We have conducted only three 48 km/h (30 mph) unbelted rigid barrier tests and only one 40 km/h (25 mph) unbelted rigid barrier test of LTVs with that dummy. Particularly given this limited test experience, we believe there are uncertainties with respect to the ability of manufacturers to meet a 48 km/h (30 mph) rigid barrier test requirement for both 50th percentile adult male dummies and 5th percentile adult female dummies.

Fifth, we believe that it is unlikely that vehicle manufacturers will significantly depower their air bags and minimally comply with the 40 km/h (25 mph) test. Our Final Economic Analysis concludes that there would not be any significant cost savings in installing air bags that were minimally compliant with a 40 km/h (25 mph) test. Vehicle manufacturers have not depowered their air bags so much that they minimally comply with the sled test. In fact, their current redesigned air bags significantly exceed the level of performance needed to meet not only the sled test, but also a 40 km/h (25 mph) rigid barrier crash test with the 50th percentile adult male dummy. As discussed above, the real world data to date for vehicles certified to the sled test, while preliminary, indicates that there has not been a loss of frontal crash protection

compared to pre-MY 1998 vehicles.[16] If this result continues, future bags will greatly exceed the minimum performance requirements of the 40 km/h (25 mph) unbelted barrier test. Indeed, the vehicle manufacturers have indicated that they would not engage in significant, widespread additional depowering if a 40 km/h (25 mph) test were adopted. They argue that their need to perform well in NHTSA's 56 km/h (35 mph) belted NCAP tests limits, as a practical matter, any inclination that might theoretically otherwise exist to depower their air bags further. NHTSA notes that this rule increases the influence of 56 km/h (35 mph) belted testing by making passing such testing with 50th percentile adult male dummies mandatory. Thus, NHTSA believes that it is not risking a substantial loss of benefits by establishing an unbelted barrier test of 40 km/h (25 mph)

Sixth, our decision to replace the 48 km/h (30 mph) generic sled test with the 40 km/h (25 mph) unbelted rigid barrier test requires a significantly higher level of safety. The agency

---

[16] To obtain a fuller understanding of these results, and the role played by the sled test and other provisions of Standard No. 208 in obtaining them, the agency conducted tests and examined information obtained from the vehicle manufacturers. The vehicle manufacturers did not depower all models. There was a wide range in the power of pre-MY 1998 air bags. As to those models that they did depower, they did not depower their air bags as much as they said they could or as much as we anticipated they might when we prepared the economic analysis accompanying our 1997 final rule that adopted the sled test option. Instead, as NHTSA tests have shown, the manufacturers typically chose levels of power that still enabled them to pass the pre-existing 48 km/h (30 mph) unbelted crash test with a 50th percentile adult male dummy. Further, these tests have revealed that vehicles with redesigned air bags pass that test with that dummy by roughly the same margin of compliance as earlier vehicles did. (It should be emphasized, as we note below in the section entitled, "Selection of 40 km/h (25 mph) as Top Speed for Unbelted Rigid Barrier Test," that meeting the unbelted rigid barrier crash test at 48km/h (30 mph) with that dummy and a 5th percentile adult female dummy is significantly more challenging than meeting it with 50th percentile adult male dummy alone. It is still more challenging to meet that test with both dummies and minimize risk simultaneously. Thus, the ability to meet the 48 km/h (30 mph) unbelted crash test with a 50th percentile adult male dummy isn't, by itself, predictive of a vehicle manufacturer's ability to meet that test with both dummies, and the other requirements added by this rule.)

As to the differences between the anticipated amount of depowering and the amount of depowering actually performed and as to the performance of the current redesigned air bags, we also note that, as discussed below, depowering is not the only way of reducing the aggressiveness of air bags. There are other design changes that were made by some manufacturers.

estimates that the sled test is roughly equivalent to a 35.5 km/h (22 mph) rigid barrier perpendicular (0 degree) crash. During the 1997 rulemaking, we looked at the relative safety consequences of an air bag designed to just meet the performance requirements associated with a 48 km/h (30 mph) generic sled test. The agency estimated the fatality impacts of designing a vehicle to minimally meet the performance requirements imposed by the current 48 km/h (30 mph) generic sled test and compared these to the fatality impacts of designing a vehicle to just meet the 40 km/h (25 mph) unbelted rigid barrier test. If these different design tasks did not have any impact on air bag size, air bags designed to the 40 km/h (25 mph) unbelted rigid barrier test could save 64 to 144 more lives than air bags designed to the generic sled test (assumed to be 35.5 km/h (22 mph)). If, on the other hand, air bags designed to the generic sled test would be smaller and provide no benefit in partial frontal impacts, because the 40 km/h (25 mph) unbelted rigid barrier test includes an up to 30 degree oblique test while the generic sled test has no angular component, 282 to 308 more lives (this range includes the 64 to 144 estimates mentioned earlier) could be saved by air bags designed to the 40 km/h (25 mph) unbelted rigid barrier test with the oblique test than lives saved by air bags designed to just comply with the generic sled test.

Increasing Belted Test Speed to 56 km/h (35 mph) for 50th Percentile Male Dummy. In the SNPRM, we asked for comment on whether we should increase the speed for the belted test using the 50th percentile adult male dummy from 48 km/h to 56 km/h (30 mph to 35 mph) if we adopted 40 km/h (25 mph) as the maximum test speed for the unbelted rigid barrier test. This rule adopts that provision. It will be phased-in for increasing percentages of each manufacturer's fleet beginning in the 2008 model year. We did not propose including the 5th percentile adult

female dummy in this requirement because we had sparse information on the practicability of such a requirement. NHTSA will initiate testing to examine this issue and anticipates proposing increasing the test speed for belted tests using the 5th percentile adult female dummy to 56 km/h (35 mph), beginning at the same time that the 50th percentile adult male is required to be used in belted testing at that speed.

NHTSA notes that Standard No. 208 previously specified the same maximum test speed for both belted and unbelted rigid barrier testing. The practical consequence of specifying the same test speed for both types of testing was to make unbelted testing the primary determinant of air bag designs. The reason for this is that, at the same test speed, the unbelted test is more difficult to pass than the belted test. Consequently, air bag designers typically focused their attention on performance in the 48 km/h (30 mph) unbelted test. After they optimized performance attributes for that test, they conducted belted tests to ensure that there were not any anomalies. Nothing in the Standard required, or had the effect of requiring, designers to optimize air bag performance for belted occupants.

Today's rule changes that. By specifying a maximum test speed for belted testing that is significantly higher that the maximum test speed for unbelted testing, Standard No. 208 will oblige occupant protection designers to focus separately on evaluating protection in both belted and unbelted testing as significant design factors, instead of having one type of testing serve simply as a check on the other. This is a major step forward for improving occupant protection for belted occupants. This step is in keeping with the agency's ongoing efforts in its Buckle *Up America* campaigns. It assures enhanced protection, especially for those 70 percent of occupants who currently wear their belts, and may help persuade those who do not wear their belts to do so.

B. Other Provisions of the Rule

Facilitation of low risk deployment technologies. In the Supplemental Notice of Proposed Rulemaking (SNPRM), we proposed that the low risk deployment requirements would have to be met for inflation levels at which air bags would deploy in rigid barrier crash tests at speeds up to 29 km/h (18 mph). 64 F.R. 60556; November 5, 1999. We also proposed that the injury criteria for the unbelted rigid barrier crash test would have to be met within the range between a minimum speed of 29 km/h (18 mph) and the maximum speed, inclusive. Some vehicle manufacturers responded that being required to test under the low risk deployment option for the inflation level (or levels) at which their air bags would deploy in crashes below 29 km/h (18 mph), combined with being required to protect unbelted dummies in crashes at 29 km/h (18 mph) and above, would limit design flexibility and discourage development of low risk deployment air bag systems. The manufacturers claimed that it is difficult with current sensors to design dual-stage air bags that could both meet the low risk deployment requirements and the barrier crash test injury criteria, particularly given the gray zone in which either a low level or high level deployment may occur.

To avoid inadvertently discouraging the development of low risk deployment technologies, we have decided that air bags with multiple inflation levels must meet the injury criteria for the low risk deployment tests for the inflation levels at which the air bags would be deployed in crashes of 26 km/h (16 mph) or below (with unbelted 5th percentile adult female dummies at both seating positions), instead of crashes of 29 km/h (18 mph) or below. However, if these air bags do not deploy at all in crashes of 26 km/h (16 mph) or below, the injury criteria must be met using the lowest level of inflation. We have also decided to raise the lower end of

the range of speeds at which the unbelted rigid barrier crash test is conducted from 29 km/h (18 mph) to 32 km/h (20 mph). Together, these two changes are intended to facilitate use of the low risk deployment option by providing flexibility for the transition of dual-stage air bag systems from low level deployments designed to protect occupants in low speed crashes and not to injure out-of-position occupants in high level deployments designed to protect occupants from injuries in severe crashes.

Elimination of unneeded tests. In developing this rule, as in developing the SNPRM, we looked for opportunities to reduce the number and types of test configurations necessary to assure that future air bags minimize the risk of air bag-induced injuries.[17] We have made several further reductions

We have dropped several test conditions for testing features (e.g., weight or size sensor) that suppress the air bag when an infant or young child is present. We eliminated some test conditions because we concluded that they were inappropriate for testing this type of feature. The test conditions we dropped for this reason included an unrestrained RFCSS tipped forward onto the dashboard and the 3 year old and 6 year old dummies placed in the low risk deployment positions, i.e., against the instrument panel,

---

[17] As noted above, when we issued the SNPRM, we reduced the number of proposed dynamic and static tests, especially those relating to the proposed requirements for reducing the risks of air bags. We reduced, from 14 to nine, the number of proposed dynamic crash tests that would be applicable to all vehicles. We originally proposed that vehicles equipped with static air bag suppression systems (e.g.,weight sensors and pattern sensors) be subject to being tested with any child restraint manufactured over a ten-year period. This would have created the possibility of testing with any one of several hundred different models of child restraints. Recognizing that, we solicited comments to aid us in identifying a much more limited number of specific models that would be representative of the array of available child restraints. Based on the public comments, we proposed to require that vehicles be able to meet the applicable requirements when tested with any one of a far more limited number of child restraints representing a cross-section of the restraints currently on the market. We also significantly reduced the number of positions in which test dummies or child restraints could be placed for testing a static suppression system. This was accomplished largely by eliminating positions that were substantially similar to other positions.

The basic concept behind weight sensors or other features that suppress the air bag when an infant or young child is present is to automatically suppress the air bag unless weight or some other factor indicates that an older child or adult is present. In testing such a device, we believe it is appropriate to test for a variety of positions an infant or young child might likely be placed in by a parent or caregiver or that might likely be assumed by the child. The conditions we are dropping do not fall within this category, but are instead ones that might occur dynamically as a result of pre-crash braking. However, since the air bag would already be automatically suppressed by this type of device in such a situation, we do not believe it necessary to test for these conditions.

We also proposed testing unrestrained rear-facing child seating systems (RFCSS) at any angle plus or minus 45 degrees from the vehicle seat's longitudinal plane. Because of difficulties in setting up the test and the unlikelihood that parents would place a RFCSS in an angled position, we have revised this test procedure to specify placement only at zero degrees of the longitudinal plane.

As proposed in the SNPRM, we have dropped the requirement for conducting oblique angle tests on vehicles using belted 5th percentile adult female dummies. We have adopted the proposal because we believe that if a vehicle can pass the perpendicular test with 5th percentile adult female dummies and the oblique tests with unbelted 50th percentile adult male dummies, it will also pass the oblique test using 5th percentile adult female dummies. Additionally, we have dropped the belted oblique angled tests for the belted 50th percentile adult male dummy. Given the unbelted oblique tests, we believe that the belted oblique angled tests are unnecessary.

New. more stringent injury criteria. In the rule, we have added a neck injury criterion and

adopted a more stringent limit on chest deflection. The injury criteria arc very similar to the ones we proposed in the SNPRM. The Nij approach to the risk of neck injury was generally accepted by the vehicle manufacturers, although they requested some modifications. We have made those modifications.

Due care provision. In the SNPRM, we proposed to maintain the "due care" provision for the existing crash test requirements and apply it to the new ones as well. However, we did not propose to apply the provision to test requirements that do not involve crashes, based on our belief that these tests are not affected by the variability associated with dynamically-induced dummy movement and/or vehicle deformation.

In this rule, we have decided against extending the due care provision to new crash tests, although it will still be available for vehicles that are not certified to the advanced air bag requirements. Our testing has indicated that manufacturers can easily meet the new injury criteria with 50th percentile adult male dummies in a 40 km/h (25 mph) unbelted test with existing air bag systems and should be able to make what ever improvements are needed to do so with 5th percentile adult female dummies without major uncertainties before they are required to certify any vehicle as meeting the advanced air bag requirements of this rule. Based on our experience with Standard No. 208 compliance activities, we do not believe there is an intrinsic need for a "due care provision," Further, as we explained in the earlier notices in this rulemaking proceeding, the inclusion of such a provision in a safety standard does not fit very well with the overall statutory scheme.

Extended availability of air bag on-off switches. As proposed, we have decided to sunset the provisions which allow original equipment (OE) and retrofit on-off switches under specified

circumstances. However, instead of sunsetting those provisions at the end of the TEA 21 phase-in period, as we proposed in the SNPRM, we are sunsetting them on September 1, 2012, two years after the end of the second phase-in, In response to a wide consensus among commenters, we have concluded that extending their availability to that date is desirable to ensure that consumers have had a chance to gain substantial experience with advanced air bag systems. This should ensure that confidence in those systems is strong enough by the sunset date to remove any desire for a manual on-off switch in vehicles produced with an advanced air bag.

Labels with strong warning messages. We have decided to adopt a new permanent sun visor label for vehicles certified as meeting the requirements of this rule. We proposed to alter the wording of the label to reflect the lower risk that will be associated with advanced air bags. However, all commenters, including the safety groups which supported a higher maximum test speed for the unbelted rigid barrier test, objected. They noted that while advanced air bags will significantly reduce the risk of death or serious injury, they will not eliminate all risk. Accordingly, we have decided that the new label should have warnings similar to those on the current label. The label will also have new graphics. In addition, we have adopted a new temporary label that states that the vehicle meets the new requirements for advanced air bags. Like the new permanent label, the new temporary label will have warnings similar to those on the current temporary one.

C. Future Rulemaking Plans

Final decision on maximum test speed for unbelted rigid barrier test. As noted above, we are planning a multi-year effort to obtain additional data to help resolve the issues and concerns relating to the maximum test speed for the unbelted rigid barrier test in the long run. Those

activities are described in the section below entitled, "Monitoring of Implementation and Field Experience; Research and Technology Assessment." Based on the results of those information gathering and analysis efforts, we will make a final decision regarding the maximum test speed for unbelted dummy testing in the long run, after providing an opportunity for informed public comment.

New rulemaking proposals. NHTSA plans to issue several proposals for further improvements in frontal occupant crash protection. One proposal would be to increase the maximum speed for the belted rigid barrier test using the 5th percentile adult female from 48 km/h to 56 km/h (30 to 35 mph). That proposal would bring the top speed for belted testing with the 5th percentile adult female dummies into line with the top speed for belted testing with the 50th percentile adult male dummies adopted in this rule. To provide data to support that proposal, we plan to initiate testing with the 5th percentile adult female in 56 km/h (35 mph) belted tests. We anticipate that if this proposal were adopted as a final rule, implementation would begin during the second stage phase-in established by today's rule. Because 56 km/h (35 mph) is the same speed at which we currently conduct our New Car Assessment Program (NCAP) frontal crash tests using belted 50th percentile adult male dummies, we will ask also for public comments on what adjustments, if any, we should make to the frontal NCAP test program.

Another proposal would be to adopt a high speed belted offset deformable barrier test. The addition of this test to Standard No. 208 would lead to improved vehicle structure, improved occupant compartment integrity and thus reduced injuries due to intrusion. This would benefit both belted and unbelted occupants. We submitted a first status report on this initiative to Congress in April 1997, and will submit a second one this spring. We expect to issue the

proposal later this year.

NHTSA is also developing proposals for adding additional test dummies to Part 572 of Title 49 CFR. The two dummies that are furthest along in their development are a dummy representing a IO-year-old child and a dummy representing a 95th percentile adult male.

D. Monitoring of Implementation and Field Experience; Research and Technology Assessment

To promote the achievement of the goals of this rule and to obtain additional data that will aid us in making a final decision about the maximum test speed that should be specified for the unbelted rigid barrier test, we are planning a multi-year effort to obtain additional data.[18] This effort will include a variety of activities. We will continue to gather and evaluate real-world crash data to monitor the effectiveness of redesigned and advanced air bags in protecting various groups and subgroups of occupants and in preventing air bag-induced deaths and injuries. We are going to continue our research program, including conducting unbelted barrier tests of current vehicles at various speeds, including 48 km/h (30 mph), and analyzing those test results. In that way, we can assess how well the manufacturers simultaneously preserve and improve protection for all occupants, belted and unbelted, and minimize risk. Further, we need to continue our research and testing regarding advanced air bag technologies to gain an understanding of the safety performance implications of various features of air bag design, In addition, we will prepare an annual "compliance margins" report to assess the extent to which vehicle

---

[18] NHTSA would welcome the help of interested persons in gathering data useful in achieving these purposes. The agency notes that the Alliance of Automobile Manufacturers has offered to gather information on how people die in high speed crashes.

manufacturers exceed the 40 km/h (25 mph) test requirement.

III. Our Proposals for Advanced Air Bags

A. Our Initial Proposal (September 1998)

Pursuant to TEA 21, on September 18, 1998, we published in the Federal Register (63 FR 49958) a notice of proposed rulemaking (NPRM) to upgrade Standard No. 208 to require vehicles to be equipped with advanced air bags that meet new, more rigorous performance requirements. The NPRM proposed to require advanced air bags in some new passenger cars and light trucks beginning September 1, 2002, and in all new cars and light trucks beginning September 1, 2005.

We proposed several new performance requirements to ensure that the advanced air bags do not pose unreasonable risks to out-of-position occupants. The NPRM gave options for complying with those requirements so that vehicle manufacturers would be free to choose from a variety of effective technological solutions and to develop new ones if they so desire. With this flexibility, they could use either technologies that modulate or otherwise control air bag deployment so deploying air bags do not cause serious injuries or technologies that prevent air bag deployment if children or out-of-position occupants are present, or both.

To ensure that the new air bags are designed to avoid causing injury to a broad array of occupants, we proposed test requirements using a family of dummies, including ones representing 12-month-old, 3-year-old and 6-year-old children, and 5th percentile adult females, as well as tests representing 50th percentile adult males. We noted that many of the proposed test procedures were new, and specifically requested comments about their suitability for measuring the performance of the various advanced systems under development.

We also proposed requirements to ensure that the new air bags are designed to protect an array of belted and unbelted occupants, including teenagers and small adults. The standards current crash test requirements specify the use of 50th percentile adult male dummies only. We proposed also to specify the use of 5th percentile adult female dummies in crash tests. The weight and size of these dummies are representative of not only small women, but also many teenagers. By testing with both the 50th percentile adult male dummy and the 5th percentile adult female dummy, we can address the risks faced by most of the entire adult female population and much of the adult male population. [19]

In addition to the existing rigid barrier test, representing a relatively "stiff' or "hard" pulse crash when conducted perpendicularly, and a more moderate pulse crash when conducted obliquely, we proposed to add a deformable barrier crash test, representing a relatively "soft" pulse crash. This proposed new soft pulse crash test requirement was intended to ensure that air bag systems are designed so that they do not deploy too late. Some current air bags deploy relatively late in certain types of crashes, such as pole impacts. If an air bag deploys too late, normally seated occupants may move too close to the air bag before it starts to inflate. In such a situation, the air bag is less likely to protect the occupant and more likely to pose a risk to the occupant. We proposed to use belted 5th percentile adult female dummies in this test because small adults sit farther forward than larger adults and thus represent a greater challenge for restraint system design.

We also proposed to phase out the unbelted sled test option as we phased in requirements

---

[19] A 95th percentile adult female, on average, weighs 199 lb and stands 5'7" tall. The 50th percentile adult male dummy weighs 171 lb and stands 5'9" tall.

for advanced air bags. We acknowledged that the sled test option has been an expedient and useful temporary measure that enabled the manufacturers to speed up the redesigning all of their air bags to reduce risks. The sled test also helped to ensure that protection would continue to be provided by air bags in high-speed crashes. Nevertheless, we stated that sled testing was not a fully satisfactory means of assessing the extent of occupant protection that a vehicle and its air bag together will afford occupants in the real world and thus was not suitable in the long run.

Finally, we proposed new and/or upgraded injury criteria for each of the proposed new test requirements, and also proposed to upgrade some of the injury criteria for the standard's existing test requirements.

B. Our Supplemental Proposal (November 1999)

We received comments on the September 1998 NPRM from a wide range of interested persons including vehicle manufacturers, air bag manufacturers, insurance companies, public interest groups, academia, and government agencies. Commenters expressed widely differing views as to how to accomplish the goals mandated by TEA 21 -- improving the benefits of air bags, while minimizing risks from air bags.

On November 5, 1999, in response to the public comments on our 1998 NPRM and to other new information we obtained after issuing that proposal, we published the SNPRM (64 FR 60556), which updated and refined the amendments under consideration in this rulemaking.

In the SNPRM, we reiterated the goals set for us by Congress in TEA 21, i.e., to improve occupant protection for occupants of different sizes, belted and unbelted, while minimizing the risk to infants, children, and other occupants from injuries and deaths caused by air bags. Further, we emphasized the need to ensure that the needed improvements in occupant protection

were made in accordance with the statutory implementation schedule.

In developing the SNPRM, we sought to reduce the number of proposed tests to the extent possible without significantly affecting the benefits of the NPRM. We were persuaded by the commenters that reducing the amount of testing was important, given the costs to manufacturers (and ultimately consumers) associated with certifying vehicles to such a large number of new test requirements. At the same time, we wanted to be sure that the final rule would include sufficient tests to ensure that air bags would meet the goals of TEA 21. Given the continued debate over what requirements should be relied upon to ensure protection to unbelted occupants, we also wanted to be sure that we received and considered public comments on the various alternative approaches reflecting the more recent views and information available to us.

The most significant differences between the NPRM and the SNPRM can be summarized as follows:

- Two alternative unbelted test procedures. While we proposed one unbelted test procedure in the NPRM, an up-to-48 km/h (30 mph) rigid barrier test using the 50th percentile adult male dummy and the 5th percentile adult female dummy, we proposed and sought comments on two alternative unbelted test procedures in the SNPRM.

  The first alternative was an unbelted rigid barrier test whose injury criteria would have to be met within the range of a minimum speed of 29 km/h (18 mph) and a maximum speed to be established between 40 to 48 km/h (25 to 30 mph), inclusive. Within this alternative was the potential for a phase-in sequence in which the maximum speed would initially be set at 40 km/h (25 mph) to provide

vehicle manufacturers additional flexibility when they are introducing advanced air bags during the phase-in. Under this phase-in sequence, the final rule could provide that the maximum speed would return to 48 km/h (30 mph) after some period of time. We also sought comment on setting the maximum speed at 48 km/h (30 mph) but temporarily permitting relaxed injury criteria performance limits (e.g. 72 g chest acceleration limit instead of 60 g chest acceleration limit) in rigid barrier crashes between 40 km/h (25 mph) and 48 km/h (30 mph).

The second alternative was an unbelted offset deformable barrier test within the range of a minimum speed of 35 km/h (22 mph) and a maximum speed to be established within the range of 48 to 56 km/h (30 to 35 mph). The latter alternative was developed in response to a recommendation made by IIHS in its comment on the NPRM.[20]

We proposed the 29 and 35 km/h (18 and 22 mph) lower ends of the ranges of test speeds for the two alternatives because we wanted to be sure that the standard would not inadvertently create incentives to push deployment thresholds downward; i.e., cause air bags to be deployed at lower speeds.

. Possible higher speed belted rigid barrier test, We stated that if we reduced the maximum speed of the unbelted rigid barrier test to 40 km/h (25 mph), we might also increase the maximum speed of the belted rigid barrier test from the current 48 km/h to 56 km/h (30 to 35 mph) and use both 5th percentile adult female and

[20] We noted that IIHS's views had changed since making that recommendation. Its changed views were discussed in the SNPRM.

50th percentile adult male dummies.

- Reduced number of tests. In the SNPRM, we significantly reduced the total number of proposed tests as compared to the NPRM. In a number of situations, we tentatively concluded that a proposed test could be deleted because the performance we sought to secure by means of that test would largely be assured by one or more of the other tests.

- Reduced offset testing. The proposed up-to-40 km/h (25 mph) offset crash test using belted 5th percentile adult female dummies would be conducted only with the driver side of the vehicle engaged, instead of both testing with the driver side engaged and separately testing with the passenger side engaged.

- Ensuring that certain static suppression systems can detect real children and adults. For our proposed static test requirements for systems which suppress air bags in the presence of infants and children (e.g., weight sensors), we proposed a new option which would permit manufacturers to certify to requirements referencing actual children, instead of 3-year-old and 6-year-old child dummies, in a stationary vehicle to test the suppression systems. (This option would not apply to systems designed to suppress the air bags only when an infant is present.) Adult human beings could also be used in the place of 5th percentile adult female dummies for the portions of those static test requirements which make sure that the air bag is activated for adults, Steps would be taken to ensure the safety of all subjects used for these tests, e.g., by turning off the air bags.

- Reduced number of child restraints used for testing suppression systems. Instead

of requiring manufacturers to assure compliance of a vehicle in tests using any child restraint which was manufactured for sale in the United States any time during a specified period prior to the manufacture of the vehicle, we proposed to require them only to assure compliance using each child restraint on a relatively short list of specified child restraint models. Those models would be chosen to be representative of the array of available child restraints. The list would be updated from time to time to reflect changes in the types of available child restraints.

- Modified requirements for systems that suppress the air bag for out-of-position occupants. We significantly modified the proposed requirements for systems that suppress the air bag when an occupant is out of position during a crash. In the NPRM, we proposed a single test procedure for all types of such suppression systems. However, we were persuaded by the commenters that the proposed test procedure was not appropriate for many of the systems that are currently under development. Because we did not have sufficient information or prototype hardware to develop a new test procedure, and because no single test procedure may be appropriate for the broad spectrum of suppression technologies currently being developed, we proposed a provision that would permit manufacturers or others to petition the agency to establish technology-specific test procedures under an expedited rulemaking process.

- No full scale dynamic out-of-position test requirements. We eliminated from this rulemaking the proposed option for full scale dynamic out-of-position test requirements (the option which included pre-impact braking as part of the test

procedure). We were persuaded by the commenters that the proposed test procedure was not workable at this time. Moreover, we concluded that this option was unnecessary at this time, since other options were available for the range of effective technologies we understand to be currently under development.

In developing the SNPRM, we carefully considered all of the comments we received in response to the NPRM. Moreover, because the SNPRM differed significantly in many aspects from the NPRM, we explained that we did not contemplate any further consideration of the comments on the NPRM in developing the final rule. We stated that if any persons believe that we did not adequately consider particular issues raised in comments on the NPRM, they should raise those issues again in commenting on the SNPRM.

Accordingly, in developing today's final rule, we have focused our consideration on the comments submitted in response to the SNPRM.

IV. Public Comments on the Supplemental Proposal

As in the case of the NPRM, we received comments on the November 1999 SNPRM from a wide range of interested persons including vehicle manufacturers, air bag manufacturers, insurance companies, public interest groups, and government agencies. In this section, we provide a general summary of those comments. A more detailed description of the comments is provided below in the sections which address the issues raised by commenters, and in the Final Economic Assessment and three separate technical papers which are being placed in the public docket.

Improving the Protection of Unbelted Occupants in Serious Crashes.

Nearly all commenters supported the unbelted rigid barrier test over the unbelted offset

deformable barrier test.

Vehicle manufacturers stated that the rigid barrier test is practicable and repeatable and does not entail the variability associated with deformable barriers and the kinematics of an offset test, They also stated that the European barrier used in the offset test is not appropriate for testing larger SUVs and light trucks.

The Center for Auto Safety (CAS) stated that the unbelted offset test holds promise as a supplemental test, but is not yet suitable for inclusion in Standard No. 208. That organization stated that there are currently insufficient data to allow for a comprehensive analysis of the consequences that would accompany the adoption of the offset test.

Some other commenters also argued that an unbelted offset test offers promise for the future, either as a replacement for the rigid barrier test or as a supplemental test.

While a near-consensus of commenters supported adoption of an unbelted rigid barrier test, there was sharp disagreement over the maximum speed for that test. The vast majority of commenters, including all auto companies and all air bag suppliers, the Insurance Institute for Highway Safety (IIHS), and the National Transportation Safety Board (NTSB) supported a maximum speed of 40 km/h (25 mph). Safety groups including Public Citizen, CAS, Consumers Union, and Parents for Safer Air Bags (Parents) supported returning to 48 km/h (30 mph).

The primary arguments made by those commenters supporting a maximum speed of 40 km/h (25 mph) can be summarized as follows:

- Current redesigned air bags work well.
- There has been no loss in benefits.
- There is no reason to believe that manufacturers would reduce air bag

effectiveness in the future under a 40 km/h (25 mph) maximum test speed.

- A 40 km/h (25 mph) test speed allows flexibility to design air bags for all occupants.
- A return to a 48 km/h (30 mph) test speed would require a return to overly aggressive air bags.
- Aggressive air bags cause deaths in high speed crashes as well as low speed crashes.
- A 48 km/h (30 mph) test speed could result in disbenefits in low speed crashes.
- There are significant technological challenges in meeting a 48 km/h (30 mph) requirement for both the 50th percentile adult male dummy and the 5th percentile adult female dummy.
- Advanced technologies are not currently available that address aggressivity and practicability problems.

The primary arguments made by those commenters supporting a maximum test speed of 48 km/h (30 mph) can be summarized as follows:

- A maximum test speed of 48 km/h (30 mph) will result in higher benefits than a test speed of 40 km/h (25 mph).
- Half of all fatalities in frontal crashes occur at a delta V above 48 km/h (30 mph); a maximum test speed of 48 km/h (30 mph) represents significantly more potentially fatal crashes than a test speed of 40 km/h (25 mph).
- In NHTSA tests, almost all vehicles with redesigned air bags passed the 48 km/h (30 mph) rigid barrier test with the 50th percentile adult male dummy, implying

that a return to a 48 km/h (30 mph) test speed would not require a return to overly aggressive air bags.

- Advanced technologies can be used to enable all vehicles to meet requirements for high speed protection and risk reduction.
- There is no justification to reduce the test speed to 40 km/h (25 mph).
- A 40 km/h (25 mph) test speed would not encourage use of advanced technologies.
- A 40 km/h (25 mph) test speed would be inconsistent with the TEA 21 requirement to improve protection for unbelted occupants.
- The increase of the belted test speed to 56 km/h (35 mph) would not recover lives lost as a result of reducing the unbelted test speed to 40 km/h (25 mph).

While maximum speed was the most controversial issue concerning the unbelted test, commenters raised other issues as well. Some vehicle manufacturers objected to the proposal to test over a range of speeds from 29 km/h (18 mph) to the highest speed. They argued that being required to meet test requirements to ensure protection beginning at 29 km/h (18 mph), combined with the proposal to test under the low risk deployment option for inflation level (or levels) that would be deployed in crashes below 29 km/h (18 mph), would limit design flexibility and discourage development of low risk deployment air bag systems.

Another significant issue addressed by commenters concerned the seating procedure for the 5th percentile adult female dummy. Vehicle manufacturers objected to the proposal to test with the seat in the full forward position. They argued that occupants, including small females, rarely if ever sit in that position. They also argued that adoption of this position could result in

consequences such as smaller, less protective air bags, and reduced ingress/egress space for rear passengers.

Several safety advocacy groups argued in favor of testing with the seat in the full forward position. They argued that some occupants sit in that position and that it is necessary to test in the "worst case" condition.

Improving the Protection of Belted Occupants in Serious Crashes.

Commenters supported our proposal to add the 5th percentile adult female dummy to the existing 48 km/h (30 mph) belted rigid barrier test.

Most supporters of a 40 km/h (25 mph) unbelted rigid barrier test, including most vehicle manufacturers, also supported increasing the maximum speed of the belted rigid barrier test to 56 km/h (35 mph). However, these commenters urged that the 56 km/h (35 mph) belted rigid barrier test be phased in after the TEA 21 phase-in period. They also urged that the higher speed test initially be conducted only with the 50th percentile adult male dummy, and that a separate rulemaking be initiated to consider whether the 5th percentile adult female dummy should be tested at that speed.

Most commenters also supported our proposal to add the up-to-40 km/h (25 mph) offset deformable barrier test using belted 5th percentile adult female dummies. Some of these commenters, however, urged that an out-of-position test for the passenger side be developed as an alternative to the test. DaimlerChrysler opposed adoption of this test, arguing that the European barrier used in the test is not appropriate for testing heavier vehicles such as SUVs and light trucks.

Some commenters expressed concerns that our proposal would result in there being too

many crash tests in Standard No. 208, and requested that we reconsider whether all of the proposed tests are needed.

Minimizing the Risk of Injuries and Deaths Caused by Air Bags.

Commenters supported the basic approach of our proposed requirements to minimizing the risk of injuries and deaths caused by air bags, including providing a variety of testing options that account for the kinds of effective technological solutions that are under development.

Vehicle manufacturers argued that some of the test conditions specified for the proposed static suppression tests, including the range of seat back angles and seat track positions, would make the tests impracticable.

Some commenters emphasized that we need to allow manufacturers to use both suppression and low risk technologies. As noted earlier, some commenters argued that adjustments need to be made in both the unbelted rigid barrier test requirements and in the requirements for the low risk deployment option to avoid limiting use of the low risk deployment option.

Commenters were generally supportive of our proposal to permit manufacturers to certify to requirements referencing human beings in a stationary vehicle to test suppression systems, so long as steps are taken to ensure the safety of all subjects used for testing.

Other Issues.

Commenters generally supported the proposed injury criteria and associated performance limits, although vehicle manufacturers recommended some changes.

We received numerous comments raising specific technical issues concerning how dummies are to be positioned for the various tests.

Commenters generally argued that current provisions allowing manual on-off switches for air bags under certain circumstances should remain in effect for a longer period of time, and a number of commenters argued that existing warning labels should not be weakened or eliminated at this time.

There was also significant differences of opinion regarding our proposals about the provision providing a due care defense against findings of noncompliance with the air bag requirements of Standard No. 208.

Several commenters raised concerns about possible unforeseen consequences resulting from the use of advanced air bag technologies.

We received several comments expressing concern about the potential impacts of this rulemaking on small businesses.

V. Diagrams of the Final Rule Requirements

After carefully considering the comments, we have decided to issue a final rule along the lines of the SNPRM. The key differences between the SNPRM and the final rule are discussed earlier and will not be repeated here. The test requirements to improve occupant protection for different size occupants, belted and unbelted, and to minimize risks to infants, children, and other occupants from injuries and deaths caused by air bags, are shown in Figures 1 and 2 below.

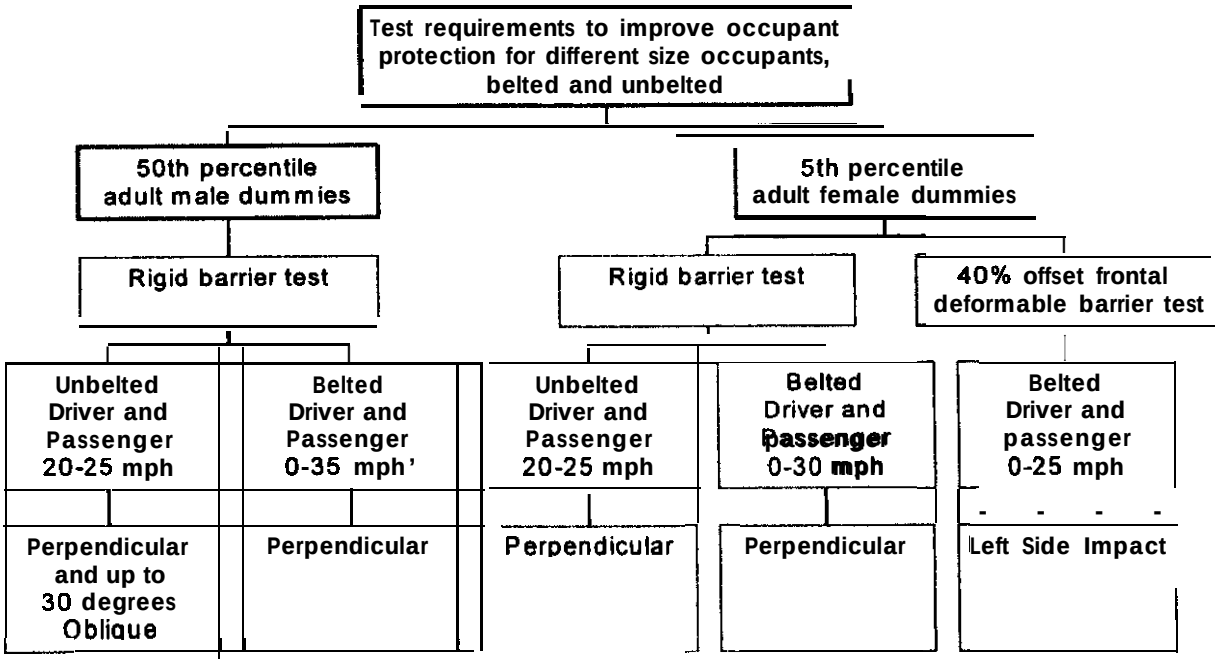

*Range is 0-30 mph during first stage of the phase-in of the final rule

Figure 1

Test Requirements to Improve Occupant Protection for Different Size Occupants, Belted and Unbelted

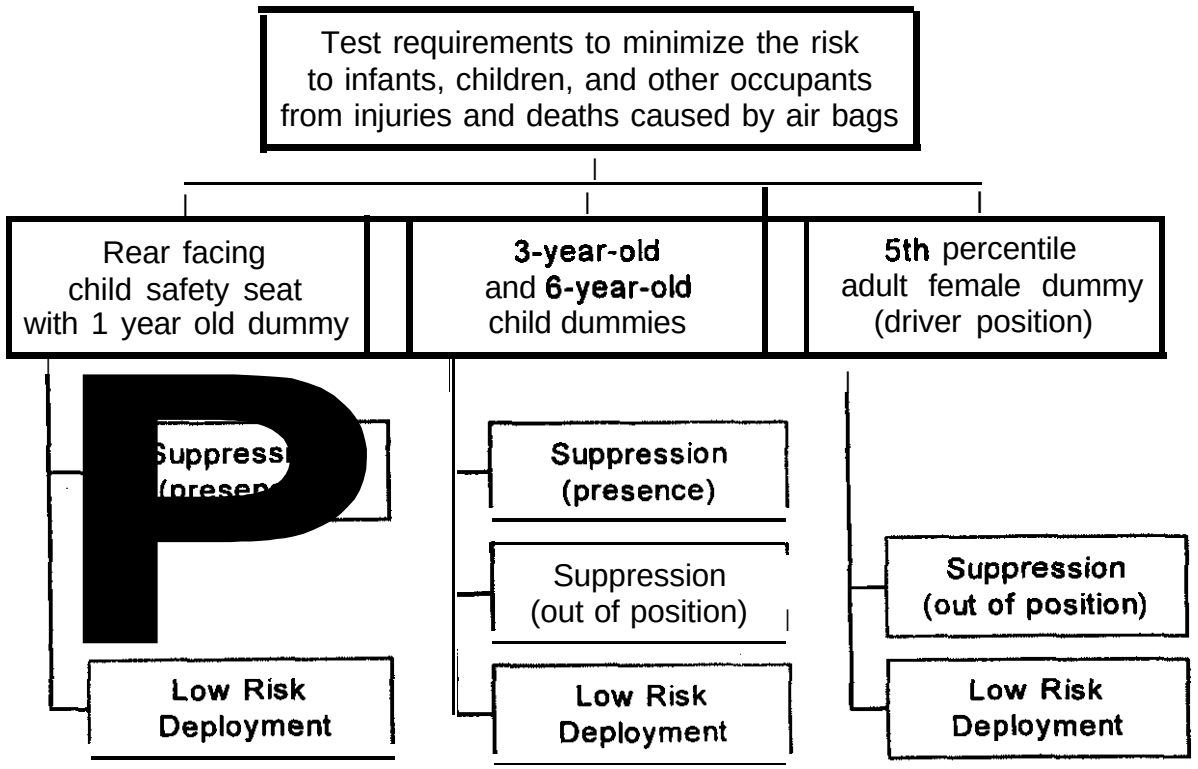

Figure 2

Test Requirements to Minimize the Risk to Infants
Children and Other Occupants from Injuries
And Deaths Caused by Air Bags

VI. Improving the Protection of Unbelted Occupants in Serious Crashes

A. Summary of Proposed Requirements

In the SNPRM, we proposed to phase out the unbelted sled test option as the requirements for advanced air bags are phased in. As explained below, sled tests have inherent limitations as compared to crash tests in measuring occupant protection.

We explained that, unlike a full scale vehicle crash test, a sled test cannot measure the actual protection an occupant will receive in a crash. We noted that while the current sled test measures some performance attributes of the air bag, it cannot measure the performance provided by the vehicle structure in combination with the air bags or even the full air bag system by itself. We also noted that the sled test does not evaluate the actual timing of air bag deployment (e.g., crash sensors), does not replicate the actual crash pulse of a particular vehicle model, does not measure the potential for harm from vehicle components that are pushed back into the occupant compartment during a crash, and does not measure how a vehicle performs in angle crashes.

The purpose of the sled test option was to make it easier for vehicle manufacturers to make quick changes to their air bags to reduce risks to out-of-position occupants. Vehicle manufacturers could not immediately incorporate advanced technologies in their vehicles, and the sled test facilitated the process of quickly certifying large numbers of vehicles with redesigned air bags to Standard No. 208. We believe the sled test has been useful as a short-term measure. Over the longer time frame, however, we believe that a better test is needed to ensure the protection of unbelted occupants.

To replace the sled test, we proposed two alternative unbelted crash test procedures: an unbelted rigid barrier test and an unbelted offset deformable barrier test. We proposed that the

unbelted rigid barrier test be conducted perpendicular and up to ±30 degrees oblique to perpendicular with 50th percentile adult male dummies, but perpendicular only in tests with 5th percentile adult female dummies. The injury criteria would have to be met within the range of a minimum speed of 29 km/h (18 mph) and a maximum speed to be established within the range of 40 to 48 km/h (25 to 30 mph). This alternative was based on the unbelted crash test that has been part of Standard No. 208 for many years but which has, as a practical matter, been temporarily superseded by the sled test option since March 1997. The barrier test represents a vehicle striking a vehicle of the same size, weight and structure head on at the same speed.

We indicated that within this first alternative, the potential existed for a phase-in sequence in which the maximum speed would temporarily be set at 40 km/h (25 mph) to provide vehicle manufacturers additional flexibility when they are introducing advanced air bags during the TEA 21 phase-in. Under this approach, the final rule could provide that a maximum speed of 48 km/h (30 mph) would apply after that period. We also indicated that if we were to reduce the maximum speed to 40 km/h (25 mph), we might also increase the maximum speed of the belted rigid barrier test from the current 48 km/b to 56 km/h (30 to 35 mph).

We proposed that the second alternative procedure, the unbelted offset deformable barrier test, would be conducted using both 50th percentile adult male dummies and 5th percentile adult female dummies, with a minimum speed of 35 km/h (22 mph) and a maximum speed to be established within the range of 48 to 56 km/h (30 to 35 mph). This alternative was based on a type of crash test used by IIHS and by Europe, except that unbelted dummies would be used.

For both alternatives, we proposed to conduct the crash tests with 50th percentile adult male dummies with the seat in the middle seat track position. However, we proposed in the

SNPRM to conduct tests using 5th percentile adult female dummies with both the driver and passenger seats in the full forward position. We tentatively selected this position because some small adults sit there and because we believe that air bags should protect those people.

We noted, however, that placement of the 5th percentile adult female dummy in the full forward position tests the occupant restraint system under a condition that may not generally occur in the real world. The University of Michigan Transportation Research Institute (UMTRI) conducted a study in which it concluded that even drivers who are approximately the same size as the 5th percentile adult female dummy generally do not sit in the full forward seat track position (Docket No. NHTSA-1998-4405-69). Also, while some short-statured drivers might need to move the driver's seat all the way forward to reach the controls, a passenger in the front passenger seat would be less likely to have a similar need. Another concern was whether, in order to meet tests for conditions that rarely occur in the real world, manufacturers might select air bag designs that offer reduced protection for conditions that are more common in the real world. Accordingly, we requested comments on whether testing the 5th percentile adult female dummy with the seat in something other than the full forward seat track position would adequately protect properly-seated individuals of all sizes while potentially allowing more design freedom.

B. Type of Test

Commenters that previously advocated retention of the sled test indicated a willingness to accept the unbelted rigid barrier test. No commenters disputed the inherent limitations of sled tests as compared to crash tests, Nearly all commenters supported the unbelted rigid barrier test over the unbelted offset deformable barrier test. However, as discussed in the next section, the

commenters that had previously supported the sled test wanted the maximum speed of the unbelted barrier test reduced to 40 km/h (25 mph).

Vehicle manufacturers stated that the rigid barrier test is practicable and repeatable and does not entail the variability associated with deformable barriers and the kinematics of an offset test, They also stated that the European barrier used in the offset test is not appropriate for testing larger SUVs and light trucks. Several vehicle manufacturers, including GM, Honda and DaimlerChrysler, stated that a high speed unbelted offset test would pose problems for vehicle sensor systems.

CAS stated that the unbelted offset test holds promise as a supplemental test, but is not yet suitable for inclusion in Standard No. 208. That organization stated that there are currently insufficient data to allow for a comprehensive analysis of the consequences that would accompany the adoption of the offset test.

Several other commenters also argued that an unbelted offset test offers promise for the future, either as a replacement for the rigid barrier test or as a supplemental test. Ford stated that although not practicable during the TEA 21 phase-in period, it believes that a 48 km/h (30 mph) offset test potentially represents a better long-term approach for enhancing unbelted protection.

Parents stated that the final rule should include both the unbelted rigid barrier test and the unbelted offset test. That organization argued that the two tests provide distinct means of ensuring protection in very different circumstances, and that inclusion of both tests is necessary in order to ensure adequate protection for unbelted occupants.

After considering the comments, we have decided to adopt the unbelted rigid barrier test to ensure protection for unbelted occupants in serious crashes. This is the unbelted crash test

included in Standard No. 208 for the past 30 years. We also use a belted rigid barrier test for Standard No. 208 and our New Car Assessment Program (NCAP). Detailed information about this type of test is presented in a paper prepared by our Office of Research and Development titled "Updated Review of Potential Test Procedures for FMVSS No. 208." That paper was prepared to accompany our SNPRM.[21]

We note that we sought comment in the SNPRM on the unbelted offset test principally to ensure that we received the benefit of public comments on all of the various alternative approaches that are available at this time. In the NPRM, we indicated that while we believed the unbelted rigid barrier test was a good approach, we were also willing to consider alternative unbelted crash tests. The only alternative unbelted crash test advocated by a commenter that could realistically be implemented within the time frame of this rulemaking was the offset deformable barrier test.

However, the commenter that originally suggested consideration of the unbelted offset test, IIHS, withdrew its support before the SNPRM was published. No commenter on the SNPRM supported adopting the unbelted offset test instead of the unbelted rigid barrier test.

As to Parents' recommendation that we adopt both unbelted tests, we believe that adoption of the proposed unbelted high speed offset test would be inappropriate at this time. We have scant data on the repeatability of this test. Nearly all the offset testing to date has used belted dummies. As noted above and also discussed in the SNPRM, several manufacturers have raised concerns that the proposed high speed unbelted offset test would pose problems for

[21] One commenter, DaimlerChrysler, submitted a critique of that paper as part of its comments. We are placing in the docket an addendum to the paper which responds to that critique.

vehicle sensor systems. See 64 FR 60579.

We also note that while we agree with Parents that the two high speed tests provide distinct means of ensuring protection in different circumstances, this does not mean that adoption of those particular two tests would be needed to ensure protection in those different circumstances. We believe that the combination of an unbelted rigid barrier test and belted offset tests can accomplish the same purpose.

As discussed in the SNPRM, the high speed unbelted rigid barrier test and the high speed unbelted offset test are significantly different, and each has potential advantages as compared to the other. The two principal advantages of an offset test are that it provides a more challenging test of vehicle crash sensors and of vehicle structure. However, these areas of performance are addressed by belted offset tests as well as unbelted offset tests.

As discussed later in this document, we are adopting an up to 40 km/h (25 mph) belted offset deformable barrier test as part of today's final rule. This test will help ensure improved sensing systems, which will benefit both belted and unbelted occupants. We are also separately pursuing our previously-announced plans to consider adding a high speed belted offset test to Standard No. 208. This test would help ensure improved vehicle structure and reduced intrusion injuries, again benefitting both belted and unbelted occupants. Because the combination of an unbelted rigid barrier test and belted offset tests (either being adopted today or currently being considered by the agency for rulemaking) can accomplish the same purpose as an unbelted offset test, we do not currently plan to consider further adopting an unbelted offset test.

C. Agency Decision to Establish Maximum Speed at 40 km/b (25 mph)

1. The Supplemental Proposal

In the SNPRM, we proposed that the maximum speed for the unbelted rigid barrier test be established within the range of 40 to 48 km/h (25 to 30 mph).

We stated that it was our intent to maximize, to the extent consistent with TEA 21, the protection that air bags offer in crashes potentially resulting in fatal injuries. Thus, we stated that it was our preference to establish such a test requirement at as high a severity as practicable. We stated that the 40 km/h (25 mph) lower end of the maximum test speed range was set forth for comment to ensure that commenters addressed a crash test recommended by AAM in late August 1999.

We also stated that the potential existed for a phase-in sequence in which the maximum speed would initially be set at 40 km/h (25 mph) to provide vehicle manufacturers additional flexibility when they are introducing advanced air bags during the phase-in. We explained that under this phase-in sequence, the final rule could provide that a maximum speed of 48 km/h (30 mph) would apply after a reasonable period of time.

We noted that, in commenting on the NPRM, the commenters opposing the 48 km/h (30 mph) unbelted barrier test had raised two primary issues. First, they argued that the test is not representative of typical crashes. Second, they argued that returning to this test would prevent continued use of "depowered" air bags and would require a return to “overly aggressive” air bags.

We addressed each of these issues in the SNPRM. As to whether the test is representative of typical crashes, we stated that because the purpose of Standard No. 208 is primarily to reduce serious and fatal injuries, we believed that the relevant question is how representative the test is of the crashes that produce those injuries. We presented data from the National Automotive Sampling System (NASS) for years 1993-1997 showing, among other

things, that about 50 percent of fatalities in frontal crashes occur at delta Vs below 48 km/h (30 mph), and about 50 percent occur at delta Vs above 48 km/h (30 mph). Looking separately at unbelted and belted occupants, we noted that 5 1 percent of the fatalities involving unbelted occupants and 47 percent of the fatalities involving belted occupants occur in frontal crashes at delta Vs below 48 km/h (30 mph). We noted that the delta V in NASS represents the speed at which the vehicle would strike a rigid barrier to duplicate the amount of energy absorbed in the crash. Thus, about half of fatalities in frontal crashes occur in crashes that are more severe than a 48 km/h (30 mph) rigid barrier crash, and half of all frontal crash fatalities occur in crashes that are less severe than a 48 km/h (30 mph) rigid barrier crash.

Given that Standard No. 208's unbelted crash test requirements are intended to save lives, we stated that we disagree that 48 km/h (30 mph) rigid barrier crashes are unrepresentative of the kinds of crashes in which we are seeking to ensure protection. We also noted that because we were proposing to require vehicles to meet the unbelted test requirements for a range of speeds up to and including 48 km/h (30 mph), we were addressing protection for lower severity crashes as well as higher severity crashes.

As to the argument that returning to the unbelted 48 km/h (30 mph) rigid barrier test would prevent continued use of "depowered" air bags and require use of “overly aggressive” air bags, we stated that a key way of assessing the validity of the argument that a return to the 48 km/h (30 mph) barrier test would -- at least in the absence of additional technological improvements -- prevent continued use of redesigned air bags was to test vehicles with those air bags in 48 km/h (30 mph) barrier tests and see how they perform. We noted that we had tested a total of 13 MY 1998-99 vehicles with redesigned air bags in a perpendicular rigid barrier crash

test at 48 km/h (30 mph) with unbelted 50th percentile adult male driver and passenger dummies. The vehicles represented a wide range of vehicle types, sizes, and crash pulses.[22]

We stated that 11 of the 13 vehicles passed the injury criteria performance limits proposed in the SNPRM. For the driver position, 12 of the 13 vehicles passed all the relevant injury criteria performance limits. In the one vehicle with a failure, the MY 1999 Acura RL, the driver dummy exceeded the femur load criteria. For the passenger position, 12 of the 13 vehicles also passed all of the relevant injury criteria performance limits. The MY 1998 Dodge Neon slightly exceeded the 60 g chest acceleration limit (with a value of 61.4 g). The other proposed injury criteria performance limits (i.e., for HIC, chest deflection, and Nij) were easily met in all the tests; for most vehicles, there was a greater than 20 percent margin of compliance for both the driver and passenger seating positions

Based on these test results, we stated that the tested vehicles with redesigned air bags, ranging widely in vehicle type and size, appeared to continue to meet Standard No. 208's 48 km/h (30 mph) unbelted rigid barrier test requirements for 50th percentile adult male dummies, many of them by wide margins.

We also noted that the relevant issue for this rulemaking is not whether some MY 1998-99 vehicles with redesigned, single-inflation level air bags would not meet a 48 km/h (30 mph) unbelted barrier test requirement, The more relevant issue is whether vehicles to be

---

[22] In particular, the 13 vehicles included one sub-compact car, one compact car, four mid-sire cars (representing high sales volume vehicles), one full-size car, two mid-size sport utility vehicles, one full-size sport utility vehicle, one pickup truck, one minivan, and one full-size van. The specific vehicles and their classes included a Saturn (sub-compact car), a Neon (compact car), an Intrepid, Camry, Taurus, and Accord (mid-sire cars), an Acura RL (full-size car), an Explorer and Cherokee (mid-size SUVs), an Expedition (large SUV), a Tacoma (pickup truck), a Voyager (minivan), and an Econoline (full-size van).

manufactured in MY 2003 and later would be able to comply with such a requirement, perhaps by means of currently available technologies not in many air bag systems as well as technologies still being or yet to be developed

We explained that today's air bag systems are not advanced air bags and thus do not respond to factors such as crash severity, occupant weight and occupant location. By contrast, the incorporation of advanced technologies would make air bag systems responsive to those factors,

We also noted:

> If a manufacturer decided to use a somewhat more powerful air bag to meet a 48 km/h (30 mph) unbelted rigid barrier test, or to provide protection in more severe crashes, the manufacturer could use advanced air bag technologies to provide less powerful levels of inflation in lower severity crashes, for smaller occupants, for belted occupants, and for occupants sitting with the seat in the full-forward position. Manufacturers could also reduce aggressivity of air bags by various means such as optimizing fold patterns, different cover designs, lighter fabrics, etc. Advanced technologies would also enable the manufacturer to suppress air bag deployment in appropriate circumstances, such as when children are present.

In our Preliminary Economic Assessment (PEA) accompanying the SNPRM, we estimated the benefits of an unbelted rigid barrier test with a maximum speed of 40 km/h (25 mph) vs. 48 km/h (30 mph). The PEA concluded that if the full fleet of vehicles' air bags were designed in the context of unbelted 40 km/h (25 mph) rigid barrier and oblique tests, an estimated 214 to 397 lives saved annually by pre-MY 1998 air bags might not be saved

2. Summary of Comments

Commenters on the SNPRM nearly unanimously supported adoption of an unbelted rigid barrier test, but sharply disagreed over the maximum speed for that test. Safety advocacy groups, supported returning to 48 km/h (30 mph). Most commenters, however, including all auto

companies and all air bag suppliers, IIHS, and NTSB supported a maximum speed of 40 km/h (25 mph).

Commenters supporting 40 km/h (25 mph).

Commenters supporting a maximum test speed of 40 km/h (25 mph) argued that there would not be a loss of benefits associated with a test at this speed, as compared to a 48 km/h (30 mph) standard.

AAM stated that the benefits of redesigned air bags will be maintained with a 40 km/h (25 mph) test. It argued that there is no reason to believe air bags designed to the sled test requirements have compromised protection, and that a 40 km/h (25 mph) barrier test is more severe than the sled test.

AAM also stated that a new 40 km/h (25 mph) test cannot simply be compared to the old 48 km/h (30 mph) test because the new test would include additional injury criteria and an additional dummy. It stated that the benefits of the other tests included in the final rule, such as the new belted offset test and the low speed risk reduction tests, should also be considered.

AAM argued that the analyses of benefits presented in the PEA are based on dummy readings from one dummy at one position in a single type of crash test in a single direction at a single speed. It stated that this approach is not comprehensive enough. AAM also argued that the strongest evidence that there are analytical limitations inherent in the agency's benefit analyses (past and present) is that past analyses predicting 1,250 lives lost from the adoption of the sled test that simply have not come true.

AAM stated that it had considered the level-of-benefit question from two different perspectives. The first involved the generation of benefit estimates using a MADYMO math

model to develop a theoretical “optimum” design for both the 40 km/h (25 mph) and 48 km/h (30 mph) suite of tests. The performance of those designs was then modeled over a broad spectrum of real world crash configurations. Based upon an injury/fatality risk analysis of the model’s output injury measures, relative benefits were calculated. The second perspective utilized an “opportunities matrix” approach to examine relative benefits by generating effectiveness estimates and applying these estimates to the spectrum of real world crash conditions.

According to AAM, both of these approaches yield the same conclusion--when considering air bag designs constrained by testing unbelted occupants at 40 km/h (25 mph) or 48 km/h (30 mph), the desired goal of reducing serious-to-fatal injuries in real world crashes is best served by requiring testing at 40 km/h (25 mph).

GM submitted an analysis which it said explains why a 25 mph rigid barrier test drives air bag designs that protect unbelted occupants in severe frontal crashes. Among other things, it said that ride down analysis shows that a 25 mph rigid barrier test requires more air bag restraint capacity than an unbelted offset deformable barrier impact at 40 mph.

Vehicle manufacturers stressed the argument that the agency should focus on the experience of redesigned air bags in MY 1998 and MY 1999 models. They argued that these redesigned air bags have provided real world benefits and that there is no evidence that more power is needed.

Toyota stated that NHTSA's concern that manufacturers will substantially decrease power in future air bags compared to current systems is unfounded. It presented data comparing velocity vs. time traces for the sled test and the 40 km/h (25 mph) test for both an SUV and a

sedan, and noted that the 40 km/h (25 mph) test pulses were more severe. Toyota argued that, in order to manage this level of energy, the air bags for these vehicles cannot be depowered further than the current levels, and that there is no reason to believe that air bags designed to the 40 km/h (25 mph) rigid barrier test will perform worse in high speed collisions than those designed to the sled pulse.

IIHS stated that it does not agree that a high-speed barrier test using unbelted dummies will necessarily lead to improved protection for any occupants, belted or unbelted. That organization stated that it disagreed with what it characterized as the agency's claim that, unless it returns to the 48 km/h (30 mph) barrier test, air bags will offer inadequate protection to many unbelted occupants, especially large people in more severe frontal crashes. That organization stated that in a number of studies of air bag performance in moderate to severe frontal crashes, it has shown that drivers are not dying because air bags offer too little protection; rather, drivers are dying because of overwhelming intrusion that no air bag design can overcome, ejection of occupants, or because of injury from the air bag itself.

IIHS argued that these observations call attention to what it believes are two errors in the agency's logic for returning to a 48 km/h (30 mph) test. First, that commenter argued that if air bags are not powerful enough, there should be some real world cases in which the energy of the deploying bags was inadequate to protect individuals in otherwise survivable frontal crashes. IIHS stated that it is not aware of any such case. It also stated that the agency's concern that air bags certified to the unbelted generic sled pulse would be less effective in frontal crashes has no foundation in real world crash data.

Second, IIHS argued that the agency has failed to appreciate that serious and fatal injuries

from deploying air bags are happening not only in low speed crashes, but also in the high speed crashes in which air bags are supposed to be most effective. That commenter stated that a recent update (including 1996 data) of its analyses of driver fatalities in air bag-equipped cars indicates air bags were the most likely source of the fatal injuries in about 15 percent of frontal crash deaths. IIHS argued that the agency must account for these deaths, as well as those more easily documented in low speed crashes, before it can justify a return to the 48 km/h (30 mph) unbelted barrier test.

IIHS also addressed the agency's concern that, without a "severe crash test" for unbelted occupants, manufacturers may reduce air bag inflation energy, or the size of air bags, thereby compromising their effectiveness. IIHS argued that such changes are constrained by other non-regulatory crash tests to which the manufacturers are subject. That organization stated that NCAP requires that air bags be reasonably deep in order to prevent dummies' heads from striking through the bags, and that offset crash testing by it and others worldwide means manufacturers will continue to install air bags with sufficient radial size to keep occupants squarely behind their air bags, even under conditions of sharp vehicle rotation.

NADA argued that the agency's proposed advanced air bag performance criteria fail to account for reasonably projected increases in safety belt and child restraint usage or for the real-life incremental benefits attributable to "depowered" air bags. NADA stated that it is reasonable to assume that by MY 2003, proper driver and passenger (including children) seat belt usage and child restraint usage rates will exceed 80 percent, and that by MY 2006, these rates should exceed 90 percent.

Vehicle manufacturers also argued that it is difficult or impossible to comply with the 48

km/h (30 mph) rigid barrier test for both the 50th percentile adult male dummies and the 5th percentile adult female dummies. They also argued that it may not be possible to satisfy both the 48 km/h (30 mph) unbelted rigid barrier test for both dummies and the low risk deployment tests.

AAM stated that while the agency has claimed that most vehicles with redesigned air bags continue to meet the unbelted 48 km/h (30 mph) barrier test, very little testing has been done with these same vehicles at 48 km/h (30 mph) with 5th percentile adult female dummies. AAM stated that the little testing that has been done produced a 50 percent failure rate. That organization stated that this testing illustrates the design tensions that the industry has been emphasizing. According to that organization, these tensions result from technology constraints which presently discern limited information about occupant size and location, crash sensors with limited predictive capability and air bags with only two power levels.

According to AAM, it is especially challenging to balance occupant protection for both the 5th percentile adult female and the 50th percentile adult male dummies and assure compliance with the barrier test. As an example, AAM cited the agency's test of the Toyota Tacoma, which resulted in an Nij of 2.65 for the 5th female passenger dummy, nearly three times the allowable injury reference value. According to AAM, the air bag size and till needed to assure compliance with the chest injury limits with 50th percentile adult male dummies at 48 km/h (30 mph) results in noncompliant neck and thorax injury reference values for 5th percentile adult female dummies seated closer to the air bag. Conversely, according to AAM, if the air bag is sized for the unbelted 5th percentile female dummy at 48 km/h (30 mph), there is insufficient restraint of the unbelted 50th male dummy. AAM argued that testing at 40 km/h (25 mph) allows the restraint engineer to design the air bag to provide reasonable occupant protection for a

broader range of occupant sizes.

GM made arguments similar to those of AAM. It argued that the unbelted 48 km/h (30 mph) barrier test using the 50th percentile adult male dummy determines the restraint energy, drives the depth of the air bag, and requires a deeper air bag that has more potential to injure a 5th percentile adult female. It argued that the unbelted 48 km/h (30 mph) barrier test using the 5th percentile adult female would require a shallower air bag that would not assure compliance for an unbelted 50th percentile adult male. According to GM, a 40 km/h (25 mph) test would permit air bag depth to be optimized for both the 5th percentile adult female and 50th percentile adult male dummies.

Ford stated that testing of the MY 2000 Taurus using 5th percentile adult female and 50th percentile adult male dummies demonstrates the difficulties of balancing requirements with a 48 km/h (30 mph) test even for vehicles equipped with advanced technologies. That company noted that the MY 2000 Taurus has dual-level inflators and other advanced technologies.

GM argued that there is no technology or combination of technologies existing today that could satisfy both the 48 km/h (30 mph) unbelted rigid barrier test and the low risk deployment tests. Honda stated that it had concerns about being able to meet the rigid barrier test for the 50th percentile adult male dummy and also meet the low risk deployment test for out-of-position occupants.

Commenters supporting a maximum speed of 40 km/h (25 mph) also argued that a 48 km/h (30 mph) maximum speed would require a return to overly aggressive air bags.

AAM stated that field evidence suggests that the current depowered air bags offer a high level of occupant protection in the real world while enhancing protection for at-risk groups. That

organization stated that a return to 48 km/h (30 mph) unbelted testing would require increasing air bag inflator outputs in some vehicles, serving to increase the risk of harm to certain groups.

GM stated that it strongly recommends that "depowered" air bags continue to be the highest force level inflation boundary necessary to comply with Standard No. 208. It argued that given the positive indications from the field on the effects of depowering, and the continued positive indications in engineering laboratory testing, it would be a serious setback to motor vehicle safety should the agency send Standard No. 208 backwards by mandating a 48 km/h (30 mph) unbelted rigid barrier test.

Toyota stated that it believes a return to 48 km/h (30 mph) unbelted barrier testing would require an increase in air bag power in many models. That company stated that, given the lack of evidence that higher powered air bags are necessary, it strongly believes that reinstating this requirement would serve only to increase risk to at-risk groups, including out-of-position children and small statured adults.

DaimlerChrysler argued that a return to the unbelted 48 km/h (30 mph) barrier test would necessitate an increase in air bag inflator power, all things being equal. That commenter stated that staged inflators can reduce, but not eliminate, the risk to smaller and out-of-position occupants in lower speed deployments. DaimlerChrysler asserted that to assure compliance, it would expect the power level of the staged deployment necessary to meet the requirements of an unbelted 48 km/h (30 mph) impact to be comparable to the pre-depowering level.

IIHS stated that while NHTSA crash tests indicate that some vehicles may meet the unbelted 48 km/h (30 mph) test without adding more energy, it believes the agency must recognize that this may not be possible in all, or even most, cases. That organization stated that

when compliance becomes difficult, it will be far too easy for manufacturers to meet the 48 km/h (30 mph) test by increasing air bag inflation energy (or the second stage of the air bag).

NTSB stated that it is concerned that the 48 km/h (30 mph) unbelted barrier test could result in a return to higher energy air bags.

Recognizing the significant disagreement among commenters concerning whether there should be a return to the 48 km/h (30 mph) test, a broad range of commenters supporting a 40 km/h (25 mph) test argued that the solution should be for the agency to adopt a 40 km/h (25 mph) test in the current rulemaking, and defer any future consideration of a 48 km/h (30 mph) test. As part of this process, they recommended that NHTSA expedite a focused examination of frontal crashes with fatalities to determine, for vehicles with depowered air bags and the latest generation of advanced air bags, how people are dying in these crashes. A 48 km/h (30 mph) test would be considered further if scientific evidence indicated that the 40 km/h (25 mph) test resulted in inadequate protection. Supporters of this approach included NTSB, IIHS, AAM, the National Safety Council, the American Trauma Society, and the National Association of Governors' Highway Safety Representatives. AAM stated that it was committing to provide additional resources for a major real-world data gathering program to provide a greater factual basis for future air bag rulemakings.

Commenters supporting 48 km/h (30 mph).

Safety advocacy groups supporting a maximum test speed of 48 km/h (30 mph) argued that it would result in higher life-saving benefits than a 40 km/h (25 mph) speed.

These commenters emphasized that half of all fatalities in frontal crashes occur at delta Vs above 48 km/h (30 mph). Parents argued that a 48 km/h (30 mph) test speed is very typical of

potentially fatal crashes since it is in the middle of the crash speeds that cause fatalities. That commenter also argued that air bag systems certified as meeting the injury criteria at the higher speeds proposed in the rule will have greater efficacy in severe frontal collisions than would air bags certified as complying at some lesser speed.

CAS stated that the 5 mph difference between 40 km/h (25 mph) and 48 km/h (30 mph) is substantial. It stated that a 48 km/h (30 mph) barrier crash is 40 percent more severe than a 40 km/h (25 mph) crash. It also stated that NHTSA data show that almost 20 percent of occupant fatalities in frontal crashes occur between 40 km/h (25 mph) and 48 km/h (30 mph) delta V.

Public Citizen stated that real world driving conditions require the return to a 48 km/h (30 mph) test. That organization stated that these conditions include higher speed limits, as well as the prevalence of vastly increased numbers of SUVs and LTVs designed with stiff front ends. Public Citizen stated that the stiffness of these vehicles, as well as other factors including higher mass, transmit increased forces to passenger cars in crashes.

Public Citizen also argued that over the past 30 years, Americans have used the 48 km/h (30 mph) rigid barrier test as the litmus test for a vehicle's crashworthiness. It noted that other motor vehicle safety standards are based on a 48 km/h (30 mph) test. Public Citizen stated that if the 48 km/h (30 mph) test were dropped, the public would view the decision as a step backward.

Public Citizen stated that one indicator of the inadequacy of a 40 km/h (25 mph) test is a statement by GM in the 1980's that it could pass an unbelted 40 km/h (25 mph) test with "friendly interiors" and no air bag at all.

CAS also stated that a 40 km/h (25 mph) unbelted test, even if coupled with a 56 km/h (35 mph) belted test, is but a slight variation of GM's proposal to Secretary Dole in 1984 for a 40

km/h (25 mph) unbelted and 48 km/h (30 mph) belted standard. CAS argued that if a car with friendly interiors could meet a 40 km/h (25 mph) barrier test in 1984 without an air bag, as GM suggested then that it could, then the addition of a cosmetic air bag would enable a vehicle to meet Standard No. 208 today, even with its revised injury criteria.

These commenters also cited the agency's estimates in the PEA that a 40 km/h (25 mph) test speed could result in 214 to 397 fewer lives saved each year.

These safety advocacy groups also argued that there is no justification to reduce the longstanding 48 km/h (30 mph) test speed and that such a reduction would be inconsistent with the TEA 2 I requirement to improve protection of occupants of different sizes, belted and unbelted.

CAS argued that reducing the unbelted test speed to 40 km/h (25 mph) would decrease the level of protection for unbelted occupants who are involved in moderate to high speed collisions. According to that commenter, Congress cannot possibly have envisioned a backward step as an improvement to safety when it mandated that the advanced air bag rulemaking take place.

Public Citizen stated that the whole point of upgrading Standard No. 208 is to ensure that automakers make better air bag restraint systems and that the standard should reflect as much as possible the protection needed in real world crashes.

According to Public Citizen, a 48 km/h (30 mph) unbelted barrier test would force manufacturers to incorporate more advanced technology. Public Citizen argued that without the additional challenge of the 48 km/h (30 mph) unbelted test, the automakers would have little motivation to move forward technologically in the future.

These commenters strongly disagreed with the arguments of the industry and some others that a 48 km/h (30 mph) standard would require overly aggressive air bags or not be possible to meet for both 50th percentile adult male dummies and 5th percentile adult female dummies.

Parents stated that the industry's rationale for a 40 km/h (25 mph) maximum speed is that the traditional 48 km/h (30 mph) speed compels production of air bag systems that are necessarily and unavoidably dangerous for small occupants in lower speed collisions. That organization stated that it strongly disagrees with this position. According to Parents, this position ignores the outstanding safety record of many well designed air bag systems that have complied with the 48 km/h (30 mph) requirement over the years. Parents also stated that this argument does not take into account advanced air bag technologies, the technologies that the advanced air bag rule is supposed to foster.

Parents also argued that the SNPRM rebutted the industry's argument that adoption of a 48 km/h (30 mph) test speed would necessarily require vehicle manufacturers to revert to excessive deployment forces found in many systems prior to sled testing. Parents stated that the agency pointed out that virtually all of the depowered air bag systems it tested still passed the 48 km/h (30 mph) test. That organization also stated that compliance margins were fairly wide and typically as wide as margins used by industry in complying with the 48 km/h (30 mph) test. Parents stated that for systems that don't meet the 48 km/h (30 mph) test, development of advanced technologies would allow these vehicles to also meet the test.

Consumers Union argued that the agency's testing of 13 vehicles with redesigned air bags leads it to conclude that even before the comprehensive redesign in air bag systems contemplated in this rulemaking, a wide variety of vehicles with depowered air bags already can pass the 48

km/h (30 mph) unbelted test. That organization stated that, contrary to the industry argument, air bags in many varieties of vehicles apparently do not need to be repowered or made "overly aggressive" in order to pass the 48 km/h (30 mph) test,

Consumers Union also stated that in NHTSA tests, two of four vehicles tested, the MY 1999 Saturn and MY 1998 Taurus, passed all the injury criteria for the driver and passenger using unbelted 5th percentile adult female and 50th percentile adult male dummies in 48 km/h (30 mph) rigid barrier tests. That organization argued that if these vehicles can pass these tests even before they have been redesigned to meet a revised Standard No. 208, other vehicles can be engineered to do so as well. These tests were also cited by other commenters supporting a 48 km/h (30 mph) standard.

Public Citizen argued that any trade-offs between meeting requirements for the 5th percentile adult female and 50th percentile adult male dummies can be overcome with the right combination of new technologies. Public Citizen cited dual or multi-level inflators, innovative folding patterns and bag shapes, lighter weight fabrics, tethers, pedal extenders, moving modules, deep dish steering wheels, collapsible steering columns, knee bolsters, stitching that keeps bags narrow to protect in low-level inflation and separates to protect occupants in higher impact crashes, top mounted vertically deploying air bags, chambered air bags (in effect, a smaller bag inside a larger one), and occupant position sensors that adjust deployment level or suppress deployment altogether.

Public Citizen also stated that the new test requirements, including static and dynamic tests using infant, child and small adult size dummies, already address the manufacturers' concerns regarding the "excessive" power of air bags in low severity crashes.

Public Citizen expressed concern about the suggestion of some commenters that more data be collected before any decision is made to return to a 48 km/h (30 mph) test. It argued that this was an excuse to delay a safety standard and that there is plenty of real world experience with the 48 km/h (30 mph) test because it was in effect from 1987 to 1997 and because most 1998 and 1999 models continued to comply with that test. Public Citizen argued further that there is a lack of data about a 40 km/h (25 mph) test since there never has been such a test requirement. It stated that the risky decision on this rulemaking would be to lower the test speed to 40 km/h (25 mph).

Public Citizen stated that it believes the driving force behind the auto industry's support for a 40 km/h (25 mph) test is that they want to avoid the expense of designing energy absorbing structures for their SUV and light truck vehicles. It also argued that if the agency finds that the 48 km/h (30 mph) test is too forceful, it has the obligation to require vehicle manufacturers to inform all current owners of 48 km/h (30 mph) air bag compliant vehicles of this fact and require the companies to recall and correct them.

Syson-Hille and Associates presented an analysis of the history of air bags which it argued shows that the fatalities that have been caused by air bags are the result of poor air bag designs and not the 48 km/h (30 mph) barrier test.

3. Response to Comments on Maximum Test Speed

Because the selection of the maximum test speed for the unbelted barrier test represented the primary issue in the SNPRM on which there was significant disagreement among the commenters and drew a significant amount of public interest, we presented a full discussion of the rationale for selecting 40 km/h (25 mph) early in this document. In this section, we provide a

specific response to the public comments on that issue, especially those comments which supported a 48 km/h (30 mph) test speed.

As indicated by the discussion we presented earlier in this document, we agree with a number of the arguments made by commenters supporting a 48 km/h (30 mph) test. We agree that a 48 km/h (30 mph) test would not require any kind of general "repowering" of air bags. We also agree that there are potential disadvantages associated with adopting a 40 km/h (25 mph) test, the most significant being that there could be significantly reduced safety benefits if manufacturers engaged in significant and widespread further depowering.

However, there are important areas where we differ with the commenters supporting a 48 km/h (30 mph) test speed.

First, we believe that setting the maximum speed at 48 km/h (30 mph) during the TEA 2 1 phase-in period, as advocated by these commenters, would not allow manufacturers to focus initially on risk reduction, would not give the manufacturers as much flexibility in simultaneously improving high speed protection and risk reduction, and would not allow advanced air bag technologies to mature and manufacturers to gain experience with them before requiring the extensive use of these technologies.

While these disadvantages would be partially mitigated by setting the maximum speed at 40 km/h (25 mph) for an initial period and at 48 km/h (30 mph) thereafter, this approach would place a premium on our being able to project accurately the pace of development and the effectiveness of advanced air bag technologies. Depending on how advanced air bag technologies developed, this approach would still give the manufacturers less flexibility in simultaneously improving high speed protection and risk reduction,

We believe that these uncertainties associated with advanced technologies, particularly the more complex ones, must be considered in selecting the maximum test speed. While we agree that many of the limitations associated with dual level inflators can be overcome by such features as multi-level inflation, chambering, and real time occupant position sensing, we believe there are significant uncertainties as to how quickly these more complex technologies can be implemented. There are advantages to vehicle manufacturers initially implementing simpler advanced technologies and learning from that experience before moving on to the more complex technologies.

As discussed earlier, particularly given the risks that the first generation of air bags posed to out-of-position children and small adult females, and the reaction of the public to those risks, it is very important that advanced air bags be properly designed from the very beginning. Air bags have proven to be highly effective in saving lives, However, if advanced air bags proved to be unreliable, or to pose significant risks to out-ofposition children and small adult females, the public acceptability of air bags would be put at risk. For these reasons, we believe that, in selecting a maximum test speed, the uncertainty associated with meeting the challenge of simultaneously minimizing risk and improving protection is best resolved in favor of minimizing risk, as long as there is good reason to believe that it is unlikely that vehicle manufacturers would reduce the overall level of high speed protection being provided today.

A second key area where we disagree with the commenters supporting a 48 km/h (30 mph) standard concerns the type of air bag system that would be produced under a 40 km/h (25 mph) standard. It is our view that the air bags most likely to be produced under a 40 km/h (25 mph) standard would offer at least as much overall high speed protection as the current redesign

air bags. While manufacturers might make some adjustments in providing high speed protection for different size occupants, we believe it is unlikely that they would reduce the overall level of protection, much less switch to some kind of new, hypothetical air bag design that might minimally pass the 40 km/h (25 mph) test, but provide little or no protection to unbelted occupants in higher severity crashes.

There are several reasons for this belief. First, the record shows that vehicle manufacturers did not respond to the flexibility provided by the sled test by providing air bags that minimally complied with the sled test. They did not depower their air bags as much as they could have, and, for the vast majority of their vehicles, they continued to provide air bags that passed the 48 km/h (30 mph) test with the 50th percentile adult male dummy.

Second, the vehicle manufacturers have specifically committed to not reducing high speed protection of air bag systems through significant and widespread depowering. See letter from AAM and AIAM dated April 4, 2000 (Docket NHTSA-99-6407, item 126).

Third, a 40 km/h (25 mph) maximum test speed does not create any significant cost incentive for vehicle manufacturers to provide reduced protection compared to a 48 km/h (30 mph) maximum test speed. As discussed in the FEA, we believe that costs are essentially the same for both test speeds. We also note that the vehicle manufacturers have stated that regardless of whether the maximum test speed is set at 40 km/h (25 mph) or 48 km/h (30 mph), they will employ the same technology on vehicles.

Fourth, there are other constraints that discourage significant further depowering. AAM and AIAM stated that air bag power cannot be significantly reduced and still permit air bags to perform well in the 56 km/h (35 mph) belted NCAP tests. Those tests are the same as the 56

km/h (35 mph) belted tests that will be added to Standard No. 208 during the second phase-in established by this rule. We note that the need to perform well in angle tests in the 40 km/h (25 mph) unbelted rigid barrier test will help ensure that vehicle manufacturers do not inappropriately shrink the size of current air bags.

Fifth, as discussed earlier in this document, the vehicle manufacturers are already introducing new technologies that enhance protection and/or reduce risk, even though these technologies are not needed to meet current requirements.

Public Citizen, CAS and the Consumer Federation of America argued that we should not rely on manufacturer representations that they will not further depower their vehicles. These commenters stated that there can be no enforcement of a promise, that what is in the rule is what the companies will comply with, and that anything else is illusory.

Although our conclusion that vehicle manufacturers are unlikely to reduce the overall level of high speed protection provided by MY 1998 and MY 1999 redesigned air bags rests in part on the representations of manufacturers, it is primarily based on factors other than promises. For all of the reasons discussed above, we believe that the manufacturers are, in fact, in a situation where prudent judgment dictates retaining the current overall level of protection in high speed crashes.

We also plan to monitor how vehicle manufacturers respond to the advanced air bag mandate. If they should change their current plans and take actions that reduce the overall level of protection, we will respond appropriately. The possibility of rulemaking, including the reduced flexibility that could accompany a 48 km/h (30 mph) maximum test speed, is another incentive for vehicle manufacturers not to take such actions as they design their advanced air

bags.

As to Public Citizen's argument that vehicle manufacturers support a 40 km/h (25 mph) maximum test speed because they want to avoid the expense of designing energy absorbing structures for SUVs and light trucks, we note that while such design changes would make it easier to pass a 48 km/h (30 mph) test, it is by no means clear that the higher test speed would require such changes. Moreover, we note that IIHS said in its comments that adding the 56 km/h (35 mph) belted NCAP test to Standard No. 208 could encourage vehicle manufacturers to soften the crash pulses of SUVs and light trucks.

We also disagree with the suggestion of some commenters that TEA 21 precludes us from establishing a maximum test speed below 48 km/h (30 mph). This view is based on the argument that any speed below the old 48 km/h (30 mph) level cannot be considered to "improve occupant protection," as required by TEA 21.

This argument fails to consider the major differences between the older unbelted rigid barrier tests and the unbelted rigid barrier tests required by this new rule. The older unbelted rigid barrier test used a single test dummy, representing a 50th percentile adult male, positioned well back from the air bag. The only measure of the effectiveness of the air bag was its effectiveness in a high speed crash into a rigid barrier. There was no assessment of risks for occupants who might be positioned near the air bag. The injury criteria included assessments of injury likelihood to the test dummy's head, chest, and upper legs.

Today's rule mandates a much more comprehensive assessment of air bag protection. It adds an entirely new series of tests to assess low speed risk to occupants of many different sizes. For the first time in the history of Standard No. 208, the agency will use dummies representing a

12-month-old, a 3-year-old, a 6-year-old, and a 5th percentile adult female. All of these new dummies will be used in assessing risk of air bags. For the high speed test, performance will be evaluated using both the mid-sized male dummy positioned well back from the air bag and the new 5th percentile female dummy positioned as far forward as the seat allows. For both dummies in the high speed unbelted test, the limit on permissible chest responses has been made more stringent and an injury criteria has been added to assess the likelihood of neck injuries. Because of all these additional complexities and increased stringency, it is not correct to claim that setting the unbelted rigid barrier test speed below 48 km/h (30 mph) necessarily reduces protection to unbelted occupants.

In addition, we note that the purpose of the new belted offset test is to help ensure that vehicle manufacturers upgrade their crash sensing and software systems, as necessary, to better address soft crash pulses. These improved crash sensing and software systems will benefit both belted and unbelted occupants.

We also note that the suggestion that TEA 21 somehow requires an unbelted barrier test with a test speed not lower than 48 km/h (30 mph) is inconsistent with the language of that statute. In fact, TEA 21 expressly left open the possibility of our retaining the sled test. That test has a severity level significantly below that of a 48 km/h (30 mph) barrier test and a 40 km/h (25 mph) barrier test.

We also disagree with the argument of some commenters that if we decide that the 48 km/h (30 mph) test requires overly powerful air bags, we must require vehicle manufacturers to notify all current owners of vehicles with 48 km/h (30 mph) air bags of this fact and to recall and correct the vehicles. In the first place, while we are setting the maximum test speed at 40 km/h

(25 mph), we have not determined that a 48 km/h (30 mph) test requires overly powerful air bags. Second, the fact that we are requiring manufacturers to provide improved air bags in new vehicles does not mean that earlier vehicles that do not meet the new requirements have a safety-related defect. If we were to accept that argument, every rulemaking we conduct to improve motor vehicle safety would result in earlier vehicles that did not satisfy the new requirements being considered to contain safety-related defects. This would be completely inconsistent with the statutory scheme set up by Congress. When the agency mandated automatic restraints, we did not require the recall of earlier vehicles without automatic restraints. Likewise, when Congress mandated air bags, we did not require the recall of earlier vehicles without air bags.

A more detailed discussion of a number of the comments concerning the unbelted test is provided in separate agency documents which are being placed in the docket. Of particular note are the Final Economic Assessment, prepared by our Office of Plans and Policy, and a paper prepared by our Office of Research and Development titled "High Speed Unbelted Test Requirements of FMVSS No. 208; Analysis of Issues Raised by Public Comments."

D. Other Issues

1. Location of 5th Percentile Adult Female Dummy

In both the NPRM and the SNPRM we proposed conducting the barrier tests with the 5th percentile adult female dummy in the full-forward seat track position. We stated that we believe the full-forward position to be the worst case position for an individual exposed to a deploying air bag and the most demanding of air bag systems. We also acknowledged in the SNPRM that this position would rarely need to be used, particularly on the passenger-side. We requested comment on whether testing in a seat track position other than full-forward would adequately

protect occupants of all sizes while allowing sufficient design freedom.

Consumers Union, CAS, and Advocates all supported our proposed seat track position. They cited the disproportionately high number of women 160 cm (5'2") and under who have died as a result of a deploying air bag and argued that testing under this rule should be required under the most extreme conditions, CAS stated that the only condition under which the agency might consider an exception to this procedure is if adjustable pedals are present in the vehicle that would enable a typical small female to move away from the steering wheel hub. Public Citizen agreed with the agency's position in the SNPRM that if manufacturers can't provide protection in the full-forward position, they have option of moving that position back and making other adjustments, such as adjustable pedals, on the driver side.

The NTSB stated that it believed the full-forward position could be inadequate if an individual could not reach the pedals while sitting against the seat back. It argued that we should position the dummy relative to the accelerator pedal rather than the seat track.

Vehicle manufacturers, including AAM, DaimlerChrysler, Toyota and Honda, averred that the full-forward seating position was too extreme and unrepresentative of driving patterns in the real world. The manufacturers stated that a full-forward seat track could force manufacturers to move the seat track back, which could lead to less storage space, reduced ingress and egress space for rear passengers, and, in smaller vehicles, an inability to install properly rear facing safety restraints in the back seat. Manufacturers also contended that testing in the full-forward position could force them to design smaller air bags since there would be less room for inflation.

The primary argument driving the manufacturers' comments is their assertion that few people ever drive in the full-forward position, as evidenced by the UMTRI study, as well as

informal studies of their own. DaimlerChrysler and Honda recommended that the seat track position for the 5th percentile female be in accordance with the vehicle manufacturer's 5th percentile female seating reference position.

We have decided to retain the requirement that the 5th percentile adult female dummy be tested in the full-forward position. As an initial matter, we ran 11 tests of production vehicles at 40 km/h (25 mph) or greater using an unbelted 5th percentile adult female driver and passenger in the full-forward seat track position in a perpendicular rigid barrier test. Of these 11 tests, nine vehicles passed all of the applicable injury criteria on the driver side (5 at 48 km/h (30 mph), 2 at 44 km/h (27.5 mph), and 2 at 40 km/h (25 mph)). On the passenger side, seven out of 11 passed all applicable injury criteria. We tested two vehicles in the same 48 km/h (30 mph) test, but with the seat moved back 7.6 cm (3 inches) from the full-forward position. We found that this was roughly consistent with the UMTRI seating procedure in one vehicle and significantly further back than the UMTRI positioning would have been for the other. Moving the seat 7.6 cm (three inches) back also placed the dummy's chest approximately 25 cm (ten inches) back from the steering hub. While both dummies on the driver's side passed the applicable injury criteria, one dummy on the passenger side exceeded the maximum allowable values for failed chest g's and femur loads. We also found that during these tests, the dummy on the driver side could not always reach the accelerator pedal. This fact, along with the numerous phone calls the agency has received over the past few years, indicates to us that at least some individuals are driving with the seat in the full-forward seat track position. If a vehicle is designed to be used in a particular position, we believe it is reasonable to assume that the position will be used at least some of the time.

We are cognizant of the manufacturers' concern that today's rule may require them to limit the extent of seat track travel. To the extent this increases occupant protection, this would appear to be a positive move. We note that in some vehicles the seat will slide forward in order to ease access to the back seat, but will then lock into place somewhere further back on the seat track. Since today's rule would not require testing in a seat position that is not fixed in place when the vehicle is driven, we believe this type of design could continue to be used. Of greater concern is the claim that some smaller vehicles will no longer be able to accommodate rear facing child restraints in the rear seat. We strongly believe that in most instances manufacturers can and should design their vehicles to allow adult occupants to ride safely in the front seat and infants to ride safely in the back seat. However, we note that the need to place rear facing child restraints in the back seat may force the front seat passenger to pull the front seat full forward. In such a circumstance, the passenger will need the protection of a deploying air bag without being exposed to undue risk. This also applies to a passenger who moves the seat full forward because the rear seat is loaded with cargo. These two circumstances argue for, rather than against, the need to test the front seat in the full-forward position.

We have decided against adopting the NTSB's recommendation that the seating procedure be based on distance from the accelerator pedal rather than seat track position. Our test requirements must be objective. We believe linking the position to distance from the pedal could introduce too many ambiguities into the seating procedure for it to remain sufficiently objective.

2. Minimum Test Speed

In the SNPRM, we proposed that manufacturers would need to meet the unbelted rigid

barrier test at any speed between 29 km/h (18 mph) and 40 to 48 km/h (25 to 30 mph). This range represents a significant change from the belted barrier test and previous unbelted barrier tests, which have required injury criteria to be met at any speed up to 48 km/h (30 mph).

GM and Ford supported the proposed lower test parameter 29 km/h (18 mph). AAM, DaimlerChrysler and Toyota supported a higher minimum test speed. VW and Honda supported a lower minimum test speed. Delphi urged the agency to return to its traditional "any speed between zero and" the maximum test speed, arguing that the minimum test speed will result in an unacceptable safety trade-off for individuals who could be aided by a deploying air bag in lower speed crashes.

The concerns of the vehicle manufacturers opposed to the 29 km/h (18 mph) lower limit revolve around their ability to meet both the low risk deployment tests at any speed up to 29 km/h (18 mph) and the high speed tests at any speed between 29 km/h (18 mph) and 40 to 48 km/h (25 to 30 mph). These manufacturers argued that the basic premise for dual-stage inflation systems is that the first stage can be tailored to reduce risk for children while offering protection for 5th percentile adult while the second stage protects the 50th percentile male occupant. According to the manufacturers, in many cases the first stage air bag will not be sufficient to satisfy the injury criteria in a test at 29 km/h (18 mph). In order to assure compliance with both the unbelted crash test requirement and a low risk deployment option utilizing a dual-stage air bag system, a manufacturer arguably would either have to drop the threshold for the second stage air bag close to 29 km/h (18 mph) to ensure compliance for the 50th percentile adult male or provide a higher-energy first stage inflator. The commenters asserted that if NHTSA were to impose the proposed speed range for the unbelted tests, we would create a situation that would

make compliance with a low risk deployment option impossible, since it would not be possible to assure that only the first stage air bag deploys at 29 km/h (18 mph) for the out-of-position test. Since the reliability of dynamic suppression systems is still unproven, the application of a test requirement that precludes low risk deployment systems would create a problem at the driver position.

On the other end of the spectrum, Delphi has argued that allowing a minimum test speed for the unbelted barrier test may result in serious injuries that could otherwise be avoided. Delphi stated that while it recognized that the proposed minimum test speed was intended to discourage lower air bag threshold speeds, unbelted occupants without an air bag may exceed the neck injury criterion in typical vehicle impacts between 16 and 22.4 km/h (10 and 14 mph). Delphi believes that NHTSA's objective in encouraging higher air bag threshold speeds is the reduction of injury risk to out-of-position occupants, the same objective addressed by the proposed advanced air bag systems. If the proposed advanced air bag systems are truly effective, Delphi asserts, lower thresholds should mitigate the injury risk that current systems pose. Accordingly, Delphi recommended that vehicle speed ranges be changed to 0 to 40 km/h (0 to 25 mph) for unbelted occupants in all rigid barrier and oblique barrier tests.

We have decided to raise the minimum test speed for the unbelted test from 29 km/h (18 mph) to 32 km/h (20 mph) while decreasing the maximum threshold for the various out-of-position tests from 29 km/h (18 mph) to 26 km/h (16 mph). We believe that this difference in speed between the two tests will be sufficient to resolve manufacturers' concerns with the potential overlap of the low risk deployment and barrier tests. Today's requirement builds in a 6 km/h (4 mph) "grey zone" that will allow manufacturers to deploy both inflator stages, if needed,

in all high speed tests, while preserving their ability to deploy only the first stage (or allow for deployment of a combination of benign stages) of the air bag in the low risk deployment tests. We are rejecting DaimlerChrysler's and Toyota's request that we test unbelted dummies only at 48 km/h (25 mph) because we continue to believe a range of speeds is necessary to adequately protect drivers and adult passengers.

As to Delphi's concern that vehicle occupants will be afforded inadequate protection in the real world because of a lower parameter on the unbelted barrier tests, we note that vehicle manufacturers must still certify compliance to the belted test at all test speeds from zero to 48 km/h (30 mph), and must satisfy the low risk deployment criteria for the 5th percentile adult female on the driver's side.

VII. Improving the Protection of Belted Occupants in Serious Crashes

In the SNPRM, we proposed two crash test requirements, both of which would have to be satisfied, to improve the protection of belted occupants in serious crashes. The first was a belted rigid barrier test; the second was a belted offset deformable barrier test.

A. Belted Rigid Barrier Test

Standard No. 208 currently includes an up-to-48 km/h (30 mph) belted rigid barrier test (perpendicular and up to ± 30 degrees oblique to perpendicular) using 50th percentile adult male dummies. As indicated earlier, this test represents a vehicle striking a like vehicle moving at the same rate of speed.

In the SNPRM, we proposed to add use of the 5th percentile adult female dummy to this test, but only in the perpendicular mode. We proposed to limit use of this dummy to the perpendicular mode in light of our desire to avoid unnecessary test requirements and because we

believed that if a vehicle can pass the perpendicular test with 5th percentile adult female dummies and the oblique tests with 50th percentile adult male dummies, it would also pass the oblique test using 5th percentile adult female dummies.

As noted above, we also indicated that if we reduced the maximum speed of the unbelted test to 40 km/h (25 mph), we might increase the maximum speed of the belted rigid barrier test from the current 48 km/h to 56 km/h (30 to 35 mph). This is the same speed at which vehicles with belted dummies are tested in existing NCAP tests.

The commenters on the SNPRM supported adding the 5th percentile adult female dummy to the existing belted rigid barrier requirements. Some commenters requested that we consider deletion of the existing belted oblique crash tests using 50th percentile adult male dummies. Honda stated that it believes that the unbelted oblique tests are sufficient to confirm that air bags offer sufficient protection for belted occupants in oblique crashes.

Most commenters that supported a 40 km/h (25 mph) unbelted rigid barrier test, including AAM, also supported increasing the maximum speed of the belted rigid barrier test from the current 48 km/h (30 mph) to 56 km/h (35 mph). However, these commenters urged that the 56 km/h (35 mph) belted rigid barrier test be phased in after the TEA 21 phase-in period. They also urged that the higher speed test initially be limited to use of the 50th percentile adult male dummy, for which there is a large amount of test data because of NCAP. They urged further that a separate rulemaking be conducted to determine whether it is practicable to meet this test requirement using 5th percentile adult female dummies.

IIHS stated that increasing the speed of the belted rigid barrier test to 56 km/h (35 mph) would accelerate the improvement of frontal crash protection afforded by light trucks, That

organization stated that while many vehicles already perform well in the 56 km/h (35 mph) NCAP test, light trucks have been an exception, IIHS stated that their stiff frames and short front ends (relative to their mass) have led to short crash pulses that make it difficult to design effective, nonaggressive air bag systems. IIHS stated that it expects one result of subjecting all passenger vehicles to a 56 km/h (35 mph) belted requirement would be the softening of the front ends of light trucks. According to that organization, this would benefit not only the occupants of light trucks, but also the occupants of other vehicles with which the trucks collide. IIHS stated that to maximize the likelihood that structural changes, rather than more aggressive air bag systems, would be incorporated to meet the new requirements, a long phase-in period should be considered for light trucks.

While most vehicle manufacturers supported increasing the belted rigid barrier test speed to 56 km/h (35 mph), as long as long lead time is provided, there were exceptions. Volkswagen stated that it believes there is no safety justification for such an increase and that, on the contrary, there could be potentially significant disadvantages to motor vehicle safety. That company stated that the higher crash speed imposes significantly increased energy absorption requirements on vehicle structures and air bag designs, which would lead to more aggressive designs. Volkswagen stated that this would be counterproductive to the concern of vehicle aggressivity/compatibility in the vehicle fleet and protection for the small driver and out-of-position children.

After carefully considering the comments, we are adopting as final our proposal to use the existing 48 km/h (30mph) belted rigid barrier test with some modifications. As an initial matter, we are requiring tests with the 5th percentile adult female dummy in the perpendicular

mode. This will help ensure that vehicle manufacturers design air bags so as to improve protection to belted persons who sit in the full forward position, including short-statured adult female drivers.

We have also decided to accept the recommendation of some commenters to eliminate the existing belted oblique tests using 50th percentile adult male dummies. The primary purpose of the oblique tests is to ensure that air bags are sufficiently wide to provide protection if an oblique crash results in the occupant moving forward at an angle. We agree that the unbelted oblique tests are more stringent than the belted oblique tests in this respect, since the belts limit occupant movement, and that the unbelted oblique tests, which are being retained, will ensure that air bags are sufficiently wide to provide protection to both belted and unbelted occupants in oblique crashes.

We will require vehicle manufacturers to begin certifying compliance with the belted 50th percentile adult male dummy at 56 km/h (35 mph) starting in 2007. Compliance will be required under a phase-in schedule that is fully discussed later in this document, We also plan to initiate rulemaking in the near future proposing to increase the upper limit for the belted rigid barrier test from 48 km/h (30 mph) to 56 km/h (35 mph) with the 5th percentile adult female dummy.

We are unconvinced that a 56 km/h (35 mph) belted rigid barrier test will require more aggressive air bag systems and vehicle frames, as VW has contended. The 56 km/h (35 mph) belted barrier test has been used in NHTSA's New Car Assessment Program (NCAP) since 1979, and most vehicles today meet the injury criteria in today's rule at that speed. NHTSA's NCAP test experience with vehicles certified to the sled test has demonstrated that when manufacturers

"depowered" their air bags, the vehicles performed as well in NCAP tests as they did previously. In an era when the government, the industry, and other groups are working hard to increase seat belt use among the general public, raising the belted test speed to 56 km/h (35 mph) for the 50th percentile test dummy is consistent with TEA-21s requirements to improve occupant protection for belted occupants. Testing at 56 km/h (35 mph) will result in manufacturers improving the combined performance of seat belts and air bags. Improving performance in this area can involve relatively simple changes in seat belt design, such as adding pretensioners or load limiters or modifying the belt system's elongation characteristics to interact more favorably with the air bag. As we are not requiring manufacturers to begin certifying any vehicles to this test speed before September 1, 2006, they have ample time to make changes to their vehicles that do not involve increasing vehicle or air bag aggressivity.

B. Belted Offset Deformable Barrier Test

In the SNPRM, we proposed to add a new crash test requirement to Standard No. 208, an up to 40 km/h (25 mph) offset deformable barrier test using belted 5th percentile adult female dummies (belted offset test). We proposed this test in an attempt to ensure that vehicle manufacturers upgrade their crash sensing and software systems, as necessary, to better address soft crash pulses, Research conducted by Transport Canada has shown that one of the causes of adverse effects of air bags is late deployment of some air bags in crashes with soft pulses, and the proposed test was one that Transport Canada has been using in its research program. We proposed that the test be conducted with the driver's side of the vehicle engaged with the barrier.

Most commenters supported adding the belted offset test, although some urged that an out-of-position test for the passenger side be developed as an alternative to this test.

AAM stated that it supports the proposed test, but claimed that its added safety benefit is questionable. That commenter stated that the test offers no added safety benefit in a rulemaking which also includes requirements for belted and unbelted 5th percentile adult female dummy rigid barrier crash testing and protection against air bag-induced injuries with suppression or low risk deployment performance. AAM noted, however, that if a vehicle manufacturer selected the suppression presence option for all of the child dummies, there would be no requirement to address minimizing risks to out-of-position passengers larger than six-year-olds. AAM recommended that an out-of-position test for the passenger side using 5th percentile adult female dummies be developed and proposed in a future rulemaking as an alternative to this test.

AAM also argued that if a sensor system must detect and respond to a soft pulse in an offset deformable barrier regulatory test, it can result in designs with either low thresholds for deployment or in designs which have late deployments in the field. That organization also stated that offset testing with the proposed barrier is not ready for use for the full vehicle fleet in the United States. According to that organization, the European barrier used in the test was never designed for heavier SUVs and light trucks.

General Motors and Ford each supported adding the proposed belted offset test to Standard No. 208 at this time, but urged that a passenger side out-of-position test be developed to either replace it or be provided as an optional alternative to it.

Toyota stated that it generally accepts the proposed offset test as a means to assess sensor timing and out-of-position issues, but expressed concern about the appropriateness of the test for heavier vehicles like SUVs and light trucks. According to that company, these vehicles tend to either override the barrier or deform the face so badly that it essentially becomes an offset rigid

barrier test, which does not represent actual car-to-car collisions in the real world.

CAS stated that the proposed test should be included in the final rule. That organization stated that because of the problems air bag crash sensors have encountered in being able to discriminate between low speed and high speed crashes, this test is necessary to adequately assess sensor performance.

CAS argued, however, that the test should be performed on both the driver and passenger side in order to prevent manufacturers from optimizing their vehicles solely on one side. That organization stated that if NHTSA adopts the test for the driver side only, a manufacturer might choose to add satellite crash sensors to the frontal crush zones of a vehicle only on the driver side. Advocates also expressed concern about requiring the test only with the driver side of the vehicle being struck.

Parents stated that the test should be conducted with unbelted as well as belted occupants, and that this part of the SNPRM improperly favored belted occupants over unbelted ones.

Delphi recommended increasing the speed range specified for the test to 0 to 48 km/h (30 mph) instead of 0 to 40 km/h (25 mph). That commenter noted that, for many vehicles, an air bag might not be required to satisfy the injury criteria at test speeds up to 40 km/h (25 mph). Thus, air bag systems might be designed with sufficiently high thresholds that they do not deploy in this test. Delphi stated that one of the objectives of the test is to evaluate performance in sensing threshold events, since there is a potential for occupants to be out-of-position when the air bag deploys in such situations. Delphi stated that it would be necessary to increase the maximum speed to 48 km/h (30 mph) to cover the sensing threshold for many vehicles and that the significance of the test would be greatly diminished if this is not done.

Consumers Union supported the addition of the proposed test, but urged that the test be conducted at 64 km/h (40 mph), instead of 40 km/h (25 mph). CU questioned how much this test will contribute when it is run at what it views as a low and unchallenging speed. Public Citizen also supported the addition of the test while stating that a higher speed test, as a supplementary test of structure, intrusion, and sensitivity, would be welcome.

NTSB expressed concern that inclusion of the offset deformable barrier test at the same time as advanced air bag technology is being developed might result in unforeseen problems. While that agency did not identify what those potential problems could be, it stated that it may be desirable to establish a separate schedule or a later phase-in.

DaimlerChrysler stated that it opposes inclusion of the proposed belted offset deformable barrier test in Standard No. 208. That company cited concerns about the European barrier not being appropriate for testing heavier vehicles such as SUVs and light trucks. DaimlerChrysler recommended that the test be removed since advanced air bags, by definition, will be designed to pose less risk to out-of-position occupants. As an alternative, that company recommended replacing the belted offset deformable barrier test with a low risk deployment test for the passenger side.

After carefully considering the comments, we have decided to adopt the belted offset test as proposed. We agree with the suggestion of several commenters that an out-of-position test using 5th percentile adult female dummies should be developed for the passenger side, and will conduct research on that issue. We note, however, that such a test would not necessarily serve as a replacement for a test that is intended to ensure improved crash sensing systems. We also agree with the suggestion of several commenters about the desirability of a high speed offset test

to address intrusion and vehicle structure. We will continue to pursue our previously-announced plans to conduct separate rulemaking on the issue of whether to add a high speed offset test to Standard No. 208.

We would like to note again that the main purpose of the belted offset test, at the proposed range of speeds, is to help ensure that vehicle manufacturers upgrade their crash sensing and software systems, as necessary, to better address soft crash pulses. Improved sensing technology will be particularly important if manufacturers design vehicles with softer front ends to meet the 56 km/h (35 mph) belted rigid barrier test discussed earlier. As discussed in the September 1998 NPRM, research conducted by Transport Canada has shown that one of the causes of adverse effects of air bags is late deployment of some air bags in crashes with a "soft crash pulse." In order to reproduce the softer, longer duration crash pulse, it selected the 40 percent offset barrier. It conducted crash tests into the barrier at 8 km/h (5 mph) increments up to 40 km/h (25 mph).

Transport Canada found that at 40 km/h (25 mph), the air bag typically deployed and was sometimes so late that the test dummy would be right on the steering wheel at that time, a "worst case" condition. We noted in the NPRM that the problem of late deployment appeared to exist for only some vehicles. We noted further that it could be addressed by such means as improving computer algorithms and adding crash sensors to a vehicle's crush zone to provide additional and earlier information to use in the decision-making algorithm.

A test that is intended to encourage improved sensing systems does not serve the same purpose as the low risk deployment test suggested by some commenters as an alternative or substitute. If, as a result of an improved sensing system, an air bag that previously would deploy

after an occupant moves out-of-position now deploys in a timely manner, it can provide protection. However, if an air bag deploys so late that the occupant has already moved onto the steering wheel, it cannot provide protection. We encourage vehicle manufacturers to respond to this new test requirement by improving sensing systems and not just providing low risk deployment.

As to Delphi's recommendation that we increase the speed range to 48 km/h (30 mph), we note that such a speed is outside the scope of our proposal. To the extent that Delphi is suggesting that our test may not pick up a late deployment problem for vehicles that are designed with sufficiently high thresholds that the air bag does not deploy in this test, we acknowledge that in some instances a vehicle's air bag system may not deploy in this test. However, our experience has been that the vast majority of air bags deploy in offset barrier crash tests slightly below 40 km/h (25 mph). Additionally, when there is a deployment, we believe crash sensors are more rigorously tested in a 40 km/h (25 mph) test than in a higher speed test. We ran offset tests at both 40 km/h (25 mph) and 56 km/h (35 mph) prior to publication of the SNPRM. In reviewing the test results, we observed that the air bags in the 56 km/h (35 mph) tests deployed significantly more quickly than in the 40 km/h (25 mph) tests. Based on these observations, we believe that increasing the range of the offset deformable barrier test up to 48 km/h (30 mph) will not test the sensor technology any more stringently than an up to 40 km/h (25 mph) offset deformable barrier test since the 40 km/h (25 mph) test better replicates late deployments in the real world.

In response to Parents, we note that the improved sensing systems required by this test will benefit both belted and unbelted occupants. The fact that this test is conducted in the belted

condition only is not intended to favor belted occupants over unbelted occupants. The belted offset test may represent the worst case scenario since the belt allows the dummy's head and neck to rotate into the path of the deploying air bag. This condition may better test for potential neck injuries than an unbelted test. Additionally, some tests, such as the oblique tests, will be conducted only with unbelted occupants. We have designed the overall matrix of tests to meet the need for safety for all occupants, belted and unbelted, while avoiding unnecessary tests and compliance costs.

We are not adopting the suggestion made by some commenters that the test be conducted both with the driver side of the vehicle engaged with the barrier and with the passenger side of the vehicle engaged with the barrier. We believe that testing with the driver side of the vehicle engaged with the barrier will be sufficient to help ensure that vehicle manufacturers improve their sensing systems.

We recognize that this test, like any other, has limitations. For example, the test represents only one of many types of soft pulses, and one specific offset configuration. While it would always be possible to identify additional tests that represent potential real world situations, we must strike a balance between ensuring that there are sufficient tests to meet the need for safety and avoiding unwarranted compliance burdens. We believe that the addition of this test with only the driver side of the vehicle engaged with the barrier strikes this balance. However, we will monitor future air bag system designs and will consider changing this decision if we find that manufacturers are implementing sensor systems that optimize performance only for impacts into the driver's side of the vehicle.

We believe that the concerns expressed by commenters about the appropriateness of the

test barrier for heavier SUVs and light trucks are not significant with respect to a test conducted at speeds up to 40 km/h (25 mph). Even if bottoming out occurs, the test still represents a relatively mild crash, and air bags should be designed to provide appropriate performance under a wide range of conditions.

Similarly, we believe that AAM's concerns that an offset test can result in designs with either low thresholds for deployment or in designs which have late deployments in the field are not relevant to a test conducted at speeds up to 40 km/h (25 mph). As noted earlier, the vast majority of existing air bag systems deploy in offset deformable barrier tests below 40 km/h (25 mph). We will consider these concerns further if we separately propose to use the European barrier in a high speed offset test.

As to NTSB's concern that adding this test at the same time as requiring advanced air bags may cause unforeseen problems of an unspecified nature, we note that vehicle manufacturers have been working to address the problem identified by Transport Canada for several years. Moreover, we believe that advanced air bag systems should easily be able to meet this requirement.

VIII. Minimizing the Risk of Injuries and Deaths Caused by Air Bags

The one fact that is common to all persons who are at risk from air bags is that they are extremely close to the air bag at time of deployment. Behavioral changes, such as ensuring that children ride in the back seat and that all occupants are properly restrained, can sharply reduce the number of persons who are in such positions.

However, to minimize air bag risks for the remaining persons who are most likely to be close to the air bag at time of deployment, one of two things must be done: either air bag

deployment must be suppressed, or the air bag must be designed to deploy in such a manner that it does not cause a significant risk of injury to persons in such positions. Each of the technologies to minimize air bag risks follows one of these approaches.

As we developed test requirements to minimize air bag risks, we needed to account for the fact that the persons who are potentially at risk vary from infants to adults, and have different potentials for injury. We therefore found it necessary to develop requirements using a variety of test dummy sizes. Moreover, since we wished to avoid requirements that are unnecessarily design-restrictive, it was necessary to develop a variety of testing options that account for the kinds of effective technological solutions that are under development.

We note that it was never our intention to limit manufacturers to using systems that provide only suppression, where appropriate, or low risk deployment, as opposed to systems that may combine suppression and low risk deployment. Moreover, we recognize that there may be safety benefits to using a combination of approaches and technologies.

Even looking at suppression systems alone, the use of multiple technologies may provide benefits. For example, manufacturers might combine weight and pattern sensing to achieve greater reliability.

Similarly, the combination of suppression and low risk deployment may better achieve the goal of minimizing air bag risks. For example, as Toyota noted, a system designed to suppress the passenger air bag for children below a specified weight would not suppress the air bag for a young child seated on an adult’s lap. However, low risk deployment might prevent serious injury in such a situation.

Because it is necessary to test the various types of suppression systems and low risk

deployment systems differently, we proposed a variety of testing options that account for the kinds of effective technological solutions that are under development. Where more than one option is specified, a manufacturer must meet at least one option; nothing precludes the manufacturer from meeting more than one. The issue of certifying compliance to more than one option is discussed later in this document.

Each of the test requirements we proposed in the SNPRM is discussed below.

A. Safety of Infants

Infants in rear-facing child safety seats (RFCSS) and in convertible child restraints in the rear-facing mode are at significant risk from deploying air bags, since the rear-facing orientation of the child seat places their heads extremely close to the air bag cover. This is why we emphasize that infants in these restraints must never be placed in the front seat unless the air bag is turned off. While the current warning labels and educational campaigns have dramatically reduced the number of fatalities to infants over the past two years, we recognize that there are still some parents who ignore this advice and place their children at grave risk from a deploying air bag. SCI data shows that some infant fatalities have occurred because parents did not place their child in a RFCSS properly.

In the SNPRM, in order to address the risks air bags pose to infants in child restraints designed to be used by them, we proposed two alternative test requirements, the selection of which would be at the option of the manufacturer. The two manufacturer options were: (1) test requirements for an automatic air bag suppression feature or (2) test requirements for low risk deployment involving deployment of the air bag in the presence of a 12-month-old Child Restraint Air Bag Interaction (CRABI) dummy in a RFCSS or convertible child restraint in the

rear-facing mode.

1. Option 1: Feature (e.g., Weight or Size Sensor) That Suppresses the Air Bag When au Infant Is Present

We proposed that if the automatic suppression feature option were selected, the air bag would need to be suppressed during several static tests using, in the right front passenger seat, a 12-month-old child dummy in child restraints designed to be used for infants. The restraints would be placed in several specified positions during the static tests. Manufacturers would be required to assure compliance using any of the child restraints included in sections B and C of the list of representative child restraints that we proposed to add as an appendix to Standard No. 208, as well as the car bed listed in section A. The list would be periodically updated to reflect changes in the types and designs of available child restraints.

In order to ensure that the suppression feature did not inappropriately suppress the air bag for small-statured adults, the air bag system would need to be activated during several static tests using a 5th percentile adult female dummy in the right front passenger seat. At the option of the manufacturer, human beings could be used in the place of the 5th percentile adult female dummy. We proposed to permit manufacturers to use human beings in light of concerns that current dummies may not be sufficiently human-like to be recognized by some of the advanced technologies under development. The issue of permitting manufacturers to certify to suppression requirements using human beings is discussed in greater detail later in this notice.

AAM, GM, Toyota, Isuzu and DaimlerChrysler all argued in their comments that the static suppression tests to protect infants were too burdensome, notwithstanding our reduction of the number of child restraints that the agency would use in compliance testing. Concerns were

raised in particular about the range of seat back angles and seat track positions, as well as the placement of a blanket on the restraints and testing with the handle and sunshield in a full-up and full-down position. The commenters also recommended that they only be required to assure compliance using a limited number of restraints in each section of the appendix (between one and three). Isuzu further argued that tests should only be conducted with belted restraints. Most of these arguments were repeated in comments on suppression testing for the 3-year-old and 6-year-old children.

David Breed and IEE offered comments on the technology available for the static suppression systems. David Breed argued that the testing of convertible infant seats in a forward-facing mode would effectively eliminate the low risk deployment option for older children because manufacturers would be forced to rely on a weight-sensing system. According to that commenter, such a restriction could lead to safety trade-offs for older children who could benefit from a benignly deploying air bag.

IEE argued that by testing suppression systems with a variety of child restraints, we are encouraging the use of discriminating systems rather than a non-discriminating system like a universal tag. IEE asserted that the non-discriminating systems are significantly more reliable than any discriminating systems currently available. The possibility that a non-discriminating system, like the Mercedes Baby-Smart, could easily resolve problems with suppression technology was echoed by DaimlerChrysler.

We note that testing performed by NHTSA at VRTC subsequent to publication of the SNPRM demonstrated that it is difficult to place some child restraints usable by infants in several of the proposed positions in some circumstances.

The first such position is testing the unrestrained child restraint at any angle plus or minus 45 degrees from the vehicle seat's longitudinal plane. While achieving this position may be possible in vehicles that do not have contoured seats, in several of the vehicles we examined, the RFCSS flipped toward the center of the seat. As a practical matter, we do not believe parents or caregivers are likely to place a child restraint on the seat at a 45 degree angle. We believe the restraint would be placed roughly along the longitudinal plane, facing either the seat back or the windshield. Accordingly, we have revised this test procedure to specify placement only at zero degrees of the longitudinal plane.

The proposed position which specified that the restraint be tipped to rest on the dashboard was also difficult to achieve. The intent behind the test was to mimic a situation where, through pre-crash braking, a child restraint slides forward and flips onto the dashboard. Our SCI investigations have reported several instances where this type of movement has occurred, with devastating consequences for the child in the child restraint.

However, this position does not test a condition for which static suppression systems are designed. Rather, such a position is one that would be appropriate as the final position in a test of a dynamic suppression system. We believe static suppression systems should be designed to classify occupants and to address positions where parents or caregivers place infants under normal driving conditions. It is exceptionally unlikely someone would drive with an infant's head wedged between the dashboard and the child restraint. We note, however, that the likelihood of a static suppression system failing to protect an occupant who slides into the proposed position during a crash is extremely remote since static suppression systems will either be set once the engine is turned on and not change regardless of the circumstances of the crash,

or will have a cycling function in which the presence of the child seat will be read periodically, allowing a time history of the child seat position. Additionally, the presence of a child seat that is precariously placed on the edge of the vehicle seat would likely be construed as an empty seat. Most manufacturers have indicated that their systems will default to a no-fire condition if the sensing system perceives that the vehicle seat is unoccupied. Finally, this position would not test a static suppression system in an objective manner, as evidenced by the difficulties we experienced in placing the infant seat in the proposed position. Accordingly, we have eliminated this test requirement.

The third condition which proved problematic in some instances was placement of the restraint with the vehicle seat in its full forward position. In smaller vehicles, the restraints often could not be placed in the front seat with the seat full forward. This was a particular problem with convertible restraints, which can be considerably larger RFCSSs. In some instances, the restraint hung suspended between the dashboard and the seat back. In other cases, the restraint had to be positioned at a severe angle in order to achieve contact with the seat cushion. Again, we do not believe parents or caregivers are likely to place a child restraint in a position where the restraint either tips forward onto the seat or where the restraint does not make any contact with the seat. Changes to the test procedures to account for this situation are discussed below.

Toyota and GM argued that the proposed requirements specifying testing of the restraints at any seat track position and at any seat back angle between the nominal design position and 25 degrees rearward would require up to 40,000 different tests to assure compliance. We believe this argument severely overstates the situation. As long as the restraint fits in the vehicle interior, a suppression system that is entirely seat-based will be able to discriminate the presence

of the restraint, regardless of the seat track position. Likewise a seat-based system will be able to detect the restraint regardless of whether the sunshield or handle is in an upright or stowed position or whether the restraint has a blanket on it.[23] Systems that could have difficulty detecting these different conditions are those which have sensors that are not completely incorporated into the seat, Such systems will need to be able to detect where the restraint is located in the vehicle and whether there are any potential impediments to accurately sensing the presence of an infant, like a sunshield, handle or blanket. However, these systems' ability to detect a sunshield, handle, or blanket should not be affected by the belted, or unbelted, condition of the child restraint

In view of the fact that parents or caregivers who continue to place infants in the front seat may position the vehicle seat in a variety of seat track positions, we continue to believe that there is a need to test suppression systems in a variety of seat track positions. However, we have also concluded that testing the systems at discrete points along the seat track should be sufficient to ensure adequate performance throughout the entire range of seat track positions. Therefore, we have decided to specify test requirements for suppression technology at the vehicle seat's full-rear position, mid-track position and full-forward position, If the child restraint strikes the instrument panel or another portion of the vehicle interior when the seat is in the full-forward position, the vehicle seat will be moved back to the next detent that allows for clearance, or, in the case of automatic seats, until a maximum of 5mm (0.2) of clearance is achieved. A more

[23] We note that seat-based systems may, however, need to "read" the presence of a rear-facing infant restraint that has been stabilized with a rolled up towel or blanket in accordance with the restraint manufacturer's instructions. While we will not use such objects in conducting our compliance tests, the presence of a towel or blanket under the most rearward portion of the child restraint is a real world scenario which some seat-based systems may need to accommodate.

complete discussion of this issue is provided later in this document.

Finally, we determined that conducting tests using a belted child restraint with the vehicle seat back 25 degrees rearward of the seat back's nominal design position for the 50th percentile adult male was not always possible. As discussed later in this document, we have decided to limit the vehicle seat back angle for the infant suppression tests to the nominal seat back design position for the 50th percentile male.

We have decided against allowing manufacturers to certify to only a limited number of the seats listed in the appendix. The number of applicable seats has already been honed down considerably from what was proposed in the NPRM. A further reduction could effectively allow manufacturers to design suppression systems that would not protect infants in child restraints representing a reasonable range of such restraints on the market.

We have also decided to retain those test conditions involving unbelted restraints. Unfortunately, not everyone always installs child restraints (including RFCSSs) properly, as indicated by several fatalities in our SCI database. If we failed to test in unbelted conditions, suppression systems could be designed so that they only worked when the seat belt was fastened. Such a system could not protect these infants.

While we understand David Breed's concern about testing convertible restraints in a forward-facing position, this test requirement is necessary and need not preclude low risk deployment for older children. As an initial matter, current air bag designs pose a risk to infants seated in forward-facing convertible child restraints, as indicated by the SCI data. However, advanced designs which eliminate that risk could still be used, even if a manufacturer chose to suppress the air bag for infants in these restraints. For example, we believe manufacturers could

design a system that suppressed the air bag based on weight and pattern recognition that is limited to the expected weights of very young children and child restraints designed for use by infants. It is possible that in some instances this technology could also suppress for a slightly older child in a convertible child seat. However, the manufacturer could also design the air bag system to deploy at a level that is non-injurious to a small child. Certification could be based on the low risk deployment test, and the potential suppression for the older child would provide supplemental protection.

IEE and DaimlerChrysler may be correct that non-discriminating, tag-like systems could offer greater reliability than discriminating systems, assuming that the correct tagged child restraint is also used. However, such systems would not ensure safety for the numerous different child restraint designs and potential restraint positions that are used by the general public. Even making tags widely available, as DaimlerChrysler suggests, would not account for those individuals who do not have a tag on their particular child restraint, either because the restraint is not generally used in a given vehicle, or because they are unaware that the tags are available. Additionally, simply providing the tags would not assure that they were installed on the restraint properly or that the tag was properly aligned when the restraint was set in the vehicle seat.

Technology like the Mercedes BabySmart appears to provide a reliable method of preventing air bag deployments when used properly. While we do not believe that these types of suppression systems alone will adequately meet the needs of motor vehicle safety, we do believe that they remain an excellent supplement to other systems.

Further, belted tests conducted with child restraints that have the lower anchor attachments will need to be conducted both with the vehicle safety belt and, in vehicles with the

corresponding anchors, with the attachments secured in the anchors with the safety belt unfastened. Such a requirement is necessary for various reasons. First, the anchors may fail to place sufficient weight on a seat to adequately test a suppression system. Second, a parent may fail to use the anchor system and use the belt system instead. Third, using a belt with the anchor system could result in damage to the system when the safety belt is cinched to 134 N (30 lb). Finally, the anchor attachments may prevent alignment of the child restraint along the defined vertical planes in low risk deployment tests. We note that Standard No. 213 does not contemplate seating systems where both the safety belt and the lower anchor attachments are used.

2. Option 2: Low -Risk Deployment for Infants in Rear-Facing Child Safety Seats

We proposed to require that, if the low risk deployment option were selected, a vehicle would be required to meet specified injury criteria performance limits when the passenger air bag is deployed in the presence of a 12-month-old CRABI dummy placed in a belted rear-facing child restraint, either a RFCSS or a convertible restraint. As with the proposed test requirements for the suppression option, manufacturers would be required to assure compliance using each child restraint included in sections B and C of the proposed list of representative child restraints, although not with the car bed identified in section A.

In the case of air bags with multiple inflation levels, the injury criteria performance limits would need to be met for any stage or combination of stages which may deploy in the presence of an infant in a rear-facing position in one of the listed restraints in a rigid barrier crash test at speeds up to 64 km/h (40 mph). Our intent was to cover all stages of inflation that could deploy

in the presence of an infant in such a restraint.

TRW stated that the requirement that the air bag deploy at the highest output is inconsistent with low risk deployment. That company stated that this will force manufacturers to employ automatic suppression technologies. TRW stated that NHTSA's analysis shows little incremental benefit to children from the addition of suppression technologies. That company stated that NHTSA's analysis also ignores potential for reduction in protection for adult occupants. TRW argued that we should revisit the low risk option.

TRW also stated that if we do not revisit the low risk option, the final rule should be changed to accommodate unresolved technical issues with suppression technologies. That company stated that it has tested various suppression technologies with respect to their ability to classify accurately the proposed range of seating positions and seat belt cinching loads on the specified lists of car seats with pure weight and/or pattern sensing and found problematic issues with each technology.

DaimlerChrysler stated that it does not see any justification for running the threshold compliance test for low risk deployment at 64 km/h (40 mph). That commenter stated that since other test requirements are proposed at a maximum of 48 km/h (30 mph), this test should be run at 48 km/h (30 mph) also. DaimlerChrysler also argued that the proposed threshold compliance test was impracticable because it specified that testing could be conducted with child seats in any of the possible positions used for the suppression tests. That company stated that this would mean that five crashes would have to be performed for each child restraint on the list.

After considering the comments, we continue to believe that it is appropriate to require vehicles that are certified to the low risk deployment option for infants to satisfy the injury

criteria for all stages of inflation that could deploy in the presence of an infant in a rear facing restraint. As we discussed in the September 1998 NPRM, a child in such a restraint would be extremely close to the passenger air bag in any crash, regardless of crash severity. This is not the case with persons in any other risk group. Moreover, manufacturers have been working on suppression devices for this risk group for the longest time, since this was the first risk group that was identified. Since suppression is available for this risk group and since there are no known benefits from deploying an air bag for this group, it is appropriate to expect advanced air bags to essentially eliminate risk of serious injury or fatality resulting from air bag deployment to infants in RFCSS. There is no reason to permit continued use of systems that place infants at significant risk of serious injury or death from the air bag in crashes of any severity level.

We do not believe that any reduction in safety to adults will occur from suppressing the passenger air bag for infants in RFCSS. While suppression of the passenger air bag for older children may raise the issue of a “gray zone” that could affect some adults, we do not believe that will be relevant to infant suppression technology.

We originally proposed to require low risk deployment for all stages of the air bag that may deploy in a crash. The modified proposal to which DaimlerChrysler objects was an effort to accommodate systems which might be designed to always provide a lower level of deployment in the presence of a rear facing restraint, regardless of crash severity.

We disagree with the argument that the proposed test procedure is impracticable. Because the low risk deployment test is only conducted in the presence of a belted child restraint, a manufacturer that designed a system that always provided a lower level of deployment in the presence of a rear facing restraint could determine what level would deploy in a barrier crash test

by means other than conducting barrier tests, e.g., by testing the sensor system that determined whether such a restraint was present.

We note that we specified a barrier crash test at a speed up to 64 km/h (40 mph) because some manufacturers may adopt a threshold higher than 48 km/h (30 mph) for deploying the highest level of inflation for the belted condition. Since these restraints are ordinarily belted, a speed higher than 48 km/h (30 mph) is needed to ensure that we cover all stages of inflation that could deploy in the presence of an infant in such a restraint.

B. Safety of Young Children

Young children are at special risk from air bags because, when unbelted, they are easily propelled close to the air bag as a result of pre-crash braking. Their small size, weight and strength also makes them more vulnerable to injury when interacting with a deploying air bag. We strongly recommend that children through age 12 ride in the back seat, because the back seat is safer, whether or not a vehicle has air bags.

In the SNPRM, in order to address the risks air bags pose to young children who do ride in the front seat, we proposed requirements using both 3-year-old and 6-year-old child dummies. We proposed three alternative test requirements, the selection of which would be at the option of the manufacturer. Manufacturers could select different options for the 3-year-old and 6-year-old child dummies.

The three manufacturer options were: (1) test requirements for a feature that suppresses the air bag when a child is present, e.g., a weight or size sensor; (2) test requirements for low risk deployment involving deployment of the air bag in the presence of out-of-position 3-year-old and 6-year-old child dummies, and (3) test requirements for a feature that suppresses the air bag

when an occupant is out of position.

1. Option 1: Feature (e.g., Weight or Size Sensor) That Suppresses the Air Bag When a Child Is Present

Our proposed requirements for an air bag suppression feature (e.g., weight or size sensor) that suppresses the air bag when a child is present were similar to the ones we proposed with respect to a suppression feature for infants. We proposed that if this option were selected, the air bag would need to be suppressed during several static tests using, in the right front passenger seat, a 3-year-old or 6-year-old child dummy. The child dummy would be placed in several specified positions during the static tests. Manufacturers would be required to assure compliance using every child restraint appropriate for a given dummy size included in the proposed list of representative child restraints. The air bag system would be required to be activated during specified tests using a 5th percentile adult female dummy.

We proposed to allow manufacturers to comply with and certify to these suppression requirements using children, instead of 3-year-old and 6-year-old child dummies. Adult females could also be used in the place of 5th percentile adult female dummies for the portions of those test requirements which make sure that the air bag system is activated for adults.

We proposed to permit manufacturers to use human beings to check suppression features in light of concerns that current dummies may not be sufficiently human-like to be recognized by some of the advanced technologies under development. For example, suppression devices that work by sensing the distributed weight pattern of a human being may not recognize the pattern of a test dummy. If a manufacturer selected this option, the suppression requirements would need to be met at each of the relevant positions for any human being within a specified weight/height

range for 3-year-old and 6-year-old children, and the air bag system could not be suppressed for any human being within a specified weight/height range for 5th percentile adult females.

In the SNPRM, we emphasized that these tests simply involve a child or adult assuming specified positions in the vehicle, with a technician checking (typically by looking at a light) whether the air bag would be suppressed or not; these tests do not involve deploying the air bag or moving the vehicle. To ensure absolute safety, we proposed to require manufacturers selecting this option provide a method to assure that the air bag would not deploy during testing; such assurance could be made by removal of the air bag. The manufacturer would also be required to provide a method to assure that the same test results would be obtained as if the air bag had not been deactivated or removed.

By and large, the comments in response to this proposed requirement mirrored those already discussed under static suppression features for infants; i.e., there are too many child restraints, too many angles and too many seat track positions. Additional concerns were voiced about the requirement that child restraints be cinched at a force up to 134 N (30 pounds). Additionally, TRW stated that the task of discriminating between a child weighing up to 66 pounds and a 1 IO-pound adult, while seemingly trivial, becomes more difficult when one takes into account the addition of child seats and seat belt cinching loads.

For the reasons set forth in the prior discussion of the suppression tests for infants, we have decided to conduct tests with the vehicle seat in the full-rear, mid-track and full-forward positions. If the dummy, the child restraint, or the child's legs interfere with the instrument panel or other portion of the vehicle interior in the full-forward position, the vehicle seat will be moved back to the next detent that allows for clearance, or, in the case of automatic seats, until a

maximum of 5mm (0.2 in) of clearance is achieved.

Likewise, the seat back angle will be the manufacturer's nominal design position for the 50th percentile male for all tests, including the test with the 5th percentile adult female, except the tests where the child is sitting on the seat and leaning against the seat back (S22.2.2.2 and S24.2.1). A fuller discussion of seat back angle is provided later in this document.

One test position for the 3-year-old child that we have modified is the position where the child is lying on the seat. While conducting tests at VRTC, we discovered that this position was problematic in vehicles with no middle seating position, The 3-year-old test dummy cannot assume a full fetal position in these vehicles. Accordingly, in our tests the dummy's legs and feet were not in contact with the passenger seat. We do not believe that the position needs to be included in the test matrix for a vehicle without a middle seating position because a child would not lie in this position for any length of time. However, in vehicles with a bench seat or with convertible bench seats, where the console can be converted into a middle seat, this position is a likely real world position, Accordingly, we have specified tests for this position only in vehicles with three designated seating positions in the front seat.

We have also dropped the static suppression tests with the 3-year-old and 6-year-old child dummies in the positions specified for the low risk deployment tests. Like the infant test where the child seat was flipped on to the instrument panel, we believe that these positions do not test a condition for which static suppression systems are designed; they are more appropriate as part of a dynamic suppression system that follows the trajectory of an occupant during a crash. Additionally, we believe that any system that suppresses when the dummy is sitting on the edge of the seat with its spine vertical, a condition that is still required for both the 3-year-old and the

6-year-old, will respond no differently from when the dummy is placed in either of the low risk deployment options. Thus, even if the dropped tests did represent a position for which static suppression systems are designed, they would likely be redundant.

Numerous comments were received regarding the cinching procedures for safety belts on child restraints. We have decided to keep the up-to-134 N (30 lb) requirement. Belt systems that cannot be cinched up to this level of force will be cinched at as high a level as possible. In our testing at VRTC, we found that a 134 N (30 lb) tension can be easily achieved. While we continue to caution adults to place their children in the back seat whenever possible, a parent or caregiver who places a child in the front seat should be able to do so as safely as possible without shutting off any available suppression technology. We regularly encourage people to have their child restraints installed by individuals who have been trained to install these restraints properly. We also encourage parents to secure a child seat in a manner that eliminates slack between the restraint and the vehicle seat. We believe that it is appropriate to use a cinching level that can be achieved by an individual who knows how to properly install child restraints. However, we do agree with the commenters that the up-to-134 N (30 lb) tension range is inappropriate for belt-positioning booster seats, since a child could not sustain that amount of belt tension, even if it were possible to achieve with a test dummy. We are specifying that these restraints be installed, and that belts be used, in accordance with the restraint manufacturer's instructions.

Since the 6-year-old child dummy is not tested in child restraints other than booster seats, we believe that the majority of the manufacturers' concerns about the suppression-activation "gray zone" are largely resolved. The 6-year-old child dummy weighs only 23.4 kg (51.6 lb). Likewise, the weight range for the six-year-old child who can be used for compliance testing has

an upper parameter of 25.6 kg (56.5 lb). Because of constraints in Standard No. 213, booster seats generally do not weigh more than 4.5 kg (9.9 lb). Accordingly, the combined weight of the child or dummy and the booster seat should still be significantly below the weight at which suppression systems will assure that air bags are activated to protect adult occupants. As discussed earlier, vehicles with child restraint anchors will need to be tested both with and without any available child restraint anchor attachments secured to the passenger seat.

2. Option 2: Low-Risk Deployment for Young Children

We proposed to require that, if the low risk deployment option were selected, a vehicle would be required to meet specified injury criteria performance limits when the passenger air bag is deployed in the presence of out-of-position 3-year-old and 6-year-old child dummies. We proposed that the test be conducted at two positions which tend to be "worst case" positions in terms of injury risk. In one of these positions, the dummy's chest is on the instrument panel; in the other, the dummy's head is on the instrument panel. We proposed more detailed positioning procedures for these two tests than for many of those proposed for the static suppression tests, since injury measures may vary considerably with position. Under our proposal, in the case of air bags with multiple inflation levels, the injury criteria would need to be met only for the levels that would be deployed in lower severity crashes; i.e., the levels that would be deployed in crashes of 29 km/h (18 mph) or below.

As discussed earlier in this document, some commenters, including AAM and Toyota, argued that the combination of testing for low risk deployment for inflation levels that would be deployed in crashes of 29 km/h (18 mph) or below and testing to ensure protection in unbelted rigid barrier tests beginning at that same speed would limit design flexibility and discourage

manufacturers from selecting the low risk deployment option. The reason for this is that the manufacturers claim it is difficult to design dual stage air bags that could both meet the low risk deployment requirements and the barrier crash test injury criteria, particularly given the gray zone in which either a low level or high level deployment may occur.

On a separate but related issue, AAM recommended that the crash test to determine the air bag deployment level to be used for the low risk deployment test be conducted with a belted dummy matching the size for which the low risk option is certified. AAM stated that this would allow manufacturers to utilize an occupant detection system to govern the deployment that would be used for the low risk deployment test.

TRW stated that the proposed injury criteria performance limits will make it very difficult to employ the low risk deployment option except in vehicles with unique geometry. That commenter stated that this would force the automobile manufacturers to employ suppression technologies.

After considering the comments, we are adopting the proposed low risk deployment tests using 3-year-old and 6-year-old child dummies, with two modifications. First, the positioning procedures for one of the out-of-position tests has been significantly simplified. A fuller discussion of the reason for this change is provided later in the document. Secondly, in order to avoid inadvertently discouraging the development of low risk deployment technologies, the injury criteria will need to be met, in the case of air bags with multiple inflation levels, for the levels that would be deployed in crashes of 26 km/h (16 mph) or below, as well as the relative timing of the multiple inflations, instead of crashes of 29 km/h (18 mph) or below. However, if the air bag did not deploy at all in crashes of 26 km/h (16 mph) or below, the injury criteria will

need to be met using the lowest level of inflation.

We believe that this change, coupled with the one discussed earlier in this document to increase the lower end of the range of speeds for which the unbelted rigid barrier test is conducted from 29 km/h (18 mph) to 32 km/h (20 mph), will facilitate use of the low risk deployment option. As discussed earlier in this document, low risk deployment offers potential benefits over suppression, especially for children older than six years, and we wish to facilitate that option to the extent consistent with safety need. We also note that if manufacturers certify compliance for all levels of inflation that occur in crashes of 26 km/h (16 mph) or below, the same low risk levels of inflation are likely to occur in crashes slightly above that speed.

We are not adopting AAM's recommendation to specify that the crash test to determine the air bag deployment level to be used for the low risk deployment test be conducted with a belted dummy matching the size for which the low risk option is certified. The final rule specifies that this crash test be conducted with an unbelted 50th percentile adult male dummy in the mid-track seat position. An out of position occupant, by definition, would always be unbelted. Determining the level of inflation with belted occupants would allow manufacturers to place technology in a vehicle that would meet the low risk deployment test requirements, but would not adequately protect for the condition that is experienced in the real world. Additionally, while we are only testing the low risk deployment technology on the passenger side with three-year-old and six-year-old child dummies, a benign deployment in low speed crashes could provide ancillary benefits to larger occupants. We are concerned that using the child dummies to determine which stage or combination of stages of the air bag to deploy could unnecessarily limit the benefits of low risk deployment air bags.

As to TRW's concern that the injury criteria performance limits make it difficult to comply with the low risk deployment option, we wish to ensure that low risk deployment air bags truly are low risk. Thus, the injury criteria limits must be set at a stringent level.

3. Option 3: Feature that Suppresses the Air Bag When a Child Is Out-of-Position

As discussed in previous notices, we believe that a feature that suppresses the air bag when an occupant is out of position, either initially or because of moving into such a location during pre-crash braking, needs to be tested very differently from one that suppresses the air bag whenever a child is present. While various static tests can be used to determine whether the latter type of suppression device is effective, they would be of limited utility in testing a feature that suppresses the air bag when an occupant moves into an out-of-position location. This is because one of the key criteria in determining whether the dynamic out-of-position suppression feature is effective is timing; i.e., whether the feature works quickly enough in a situation where an occupant is propelled out of position as a result of pre-crash braking (or other pre-crash maneuvers). We accordingly developed separate requirements for such dynamic suppression devices.

The development of requirements for dynamic suppression devices posed special problems, however. While much work is currently being done on the development of dynamic automatic suppression systems (DASS), the technology is still not mature. In addition, a number of different technologies are currently being considered. Each of these technologies has particular attributes which affect the appropriateness of the means used to evaluate its performance. Given these factors, we were unable to develop a complete set of performance

requirements and test procedures that would be appropriate for the range of potential DASS designs.

Accordingly, we proposed to establish very general performance requirements for DASS and a special expedited petitioning and rulemaking process for considering procedures for testing advanced air bag systems incorporating a DASS. Target time limits for each phase of such a rulemaking were proposed. Anyone wishing to utilize such advanced air bags could develop test procedures for demonstrating the compliance of their particular DASS with the performance requirements and submit those test procedures to the agency for our consideration. If we deemed it appropriate to do so after evaluating the petition, we would publish a notice proposing to adopt the test procedure. After considering those comments, we would then decide whether the procedure should be added to Standard No. 208. If we decided to do so, and if the procedure were suitable for the DASS of any other vehicles, then the procedure could be used by the manufacturers of those vehicles as well as by the petitioner. We noted that we intended to minimize the number of different test procedures that are adopted for DASS and to ensure ultimately that similar DASS are tested in the same way.

Comments regarding DASS indicated general support for our proposal. Commenters addressing issues related to the DASS proposal included two manufacturers, DaimlerChrysler and GM, five suppliers, ASCI, Autoliv, Breed Technologies (Breed), Delphi and TRW, two trade groups, AORC and AAM, a public interest group, the Center for Regulatory Effectiveness (CRE) and one private individual (JCW). With one exception, JCW, all commenters agreed that the DASS requirements and test procedure proposed in the NPRM were unworkable and must be abandoned. Two commenters, Breed and ASCI, propounded the use of a sled test and disagreed

with our judgment that development of a practical test procedure for evaluating DASS-equipped vehicles is not presently feasible.

Several commenters voiced strong reservations regarding the DASS proposal we put forth in the SNPRM. JCW objected to the elimination of the DASS out-of-position requirements. JCW argued that without some form of suppression to protect people who are in the immediate vicinity of an air bag because of pre-crash braking, the safety potential of advanced air bags will be lost. Breed and ASCI stated that sled tests which accurately reproduce the movements of unrestrained occupants in pre-crash braking are currently available and should be used as a compliance test for DASS systems.

One matter mentioned by a number of commenters concerned the confidentiality of information provided by petitioners seeking adoption and approval of a DASS compliance test procedure. AORC and AAM urged us to consider that manufacturers would be deterred from investing in DASS systems if the specifics of their proprietary technologies were published and made available to the public and to competitors. AAM suggested that this issue might be addressed by not requiring that the identity of the petitioner and the particular automobiles where a DASS system is to be installed be revealed to the public during the course of the petition and review process. Delphi and Autoliv contended that the proposed DASS petition procedures required the submission of too much proprietary information. In particular, Autoliv objected to the proposed requirements that petitioners must furnish a complete description and explanation of a DASS system and a complete description of the logic used by that system. CRE suggested that the only materials that need to be made public during the petition process are those that would allow for comment on the proposed test procedure and not on the specifics of the DASS

system at issue. The organization strongly recommended that our final rule emphasize that the "proposed rule" that is being offered for public comment would consist only of a proposed test procedure that would not include the details of the technology used or the data submitted in support of the proposed test procedure.

In addition to concerns about confidentiality, a number of commenters offered remarks about the expedited rulemaking procedure we proposed for DASS systems. Several commenters requested that the expedited procedures proposed for DASS systems be expanded to include all advanced air bag technologies. Autoliv, DaimlerChrysler, Breed, AORC and Delphi also suggested that the expedited rulemaking procedure be expanded to allow the use of new technologies in areas other than dynamic suppression systems. In regard to the timing of the proposed procedure, AAM suggested that we adopt a procedural timetable similar to that already used for evaluating the adequacy of anti-theft devices under 49 CFR Part 543. AORC and CRE urged us to expedite the regulatory approval process to the maximum extent possible. CRE also suggested that notice and comment could be eliminated altogether. If, CRE contends, initial DASS rulemakings do not stimulate any substantive comments by the public, we would then be in a position to dispense with traditional notice and comment as the procedure would be superfluous.

One commenter, GM, voiced substantial concerns about the effect that initial DASS rulemakings would have on subsequent petitions. In GM's view, the first successful DASS petitioner will define a large number of important conditions for DASS testing and test procedures. GM believes that there will be a very strong incentive for others in the industry to conform to the existing test procedure rather than develop a new or different technology,

particularly because subsequent petitioners will face additional burdens in demonstrating that an existing DASS test cannot be used. GM urged us to use the traditional rulemaking process for the initial DASS petitions and provide adequate time for comment on any DASS proposal.

After review of the comments received in response to the SNPRM, we are adopting the proposal with few modifications. We have not been presented with, and are not aware of, any information indicating that any feasible test procedure now exists for a DASS system. We are also declining to expand the scope of the expedited petition process to other areas of Standard No. 208. Unlike other air bag technologies, DASS technology is still in the early stages of development. Other technologies are more mature, and developments within these areas may be adequately addressed through traditional rulemaking procedures.

The final rule makes several modifications to address confidentiality concerns. As the identity of the supplier or manufacturer would not be relevant to the evaluation of a test procedure and performance standard, we have modified section 552.13(e) to clarify that if a petitioner desires to have its identifying information withheld from public disclosure, it may request that the agency do so pursuant to 49 CFR Part 512. We have determined that the requirements outlined in section 552.14(b)(1) could be construed as demanding that all details of any algorithms and/or system logic be provided to the agency. Accordingly, the final rule provides that the description of the system logic may be limited to a flow chart or similar materials outlining the function of the system. We also wish to emphasize that pursuant to Part 512, petitioners may submit both confidential and non-confidential versions of their petitions and accompanying materials. These materials may include test films, printouts and similar data.

The final rule also makes slight modifications to the procedural timetable for the petition

process. In order to alleviate the concerns raised by the precedential effect of the initial DASS petition, we have specified an extended comment period for such a petition. Section 552.15(c) of the final rule provides that we expect to employ a 30-day comment period in a DASS test procedure rulemaking. However, in the case of an initial petition or a petition raising particularly novel issues, we may provide 60 days for comments. Offering an extended comment period will provide interested parties with additional time to evaluate the proposed test procedure and its implications, particularly in regard to suitability for other DASS concepts or designs under development.

We disagree with the argument that without some form of suppression to protect people who are in the immediate vicinity of an air bag because of pre-crash braking, the safety potential of advanced air bags will be lost. DASS systems represent one approach to minimizing air bag risks. As discussed elsewhere in this document, other approaches include deploying the air bag in a manner that does not cause harm and other types of suppression systems; e.g., suppressing the air bag when children are present.

C. Safety of Teenage and Adult Drivers

Out-of-position drivers are at risk from air bags if they are extremely close to the air bag at the time of deployment. While any driver could potentially become out of position, small-statured drivers are more likely to be positioned on top of the air bag because they generally sit closer to the steering wheel than larger drivers.

In the SNPRM, in order to address the risks air bags pose to out-of-position drivers, we proposed requirements using 5th percentile adult female dummies. We proposed two alternative test requirements, the selection of which would be at the option of the manufacturer.

The manufacturer options proposed in the SNPRM were similar to those using 3-year-old and 6-year-old child dummies, with one significant exception, Since air bags provide safety benefits to small-statured drivers, it would not be appropriate to permit manufacturers to suppress air bag deployment under all conditions in the presence of such occupants. Therefore, this type of suppression feature would not be permitted.

The two manufacturer options proposed in the SNPRM were: (1) test requirements for low risk deployment involving deployment of the air bag in the presence of out-of-position 5th percentile adult female dummies, and (2) test requirements for a feature that suppresses the driver air bag when the driver is out of position.

1. Option 1: Low-Risk Deployment for Drivers

We proposed to require that, if the low risk deployment option were selected, a vehicle would be required to meet specified injury criteria performance limits when the driver air bag is deployed in the presence of an out-of-position 5th percentile adult female dummy. We proposed that the test be conducted at two positions which tend to be "worst case" positions in terms of injury risk. In one of these positions, the dummy's chin is on the air bag module; in the other, the dummy's chin is on the upper rim of the steering wheel. We proposed detailed positioning procedures for these two tests, since injury measures may vary considerably with position.

Under our proposal, in the case of air bags with multiple inflation levels, the injury criteria would need to be met only for the levels that would be deployed in lower severity crashes; i.e., the levels that would be deployed in crashes of 29 km/h (18 mph) or below. A driver would most likely be extremely close to the air bag in lower severity crashes, following pre-crash braking.

The comments on the low risk deployment requirements for small drivers were similar to those on the requirements for young children. Our response is also similar.

We are adopting the proposed low risk deployment tests using the 5th percentile adult female dummy, with the same modifications we made for the tests using child dummies; i.e., simplified positioning procedures will be used, and injury criteria will need to be met, in the case of air bags with multiple inflation levels, for the levels and timing that will be deployed in crashes of 26 km/h (16 mph) or below, instead of crashes of 29 km/h (18 mph) or below, using unbelted 5th percentile adult female dummies. However, if the air bag did not deploy at all in crashes of 26 km/h (16 mph) or below, the injury criteria will need to be met at the lowest level of inflation. This modification will help facilitate low risk designs. Likewise, we are requiring the use of an unbelted 50th percentile adult male dummy seated in the mid-track seat position in the crash test used to determine which stage or combination of stages to fire for the low risk deployment tests. Our rationale for this requirement is the same as for the passenger side: larger occupants should not be deprived of ancillary benefits from more benign air bags in low speed crashes.

2. Option 2: Feature that Suppresses the Air Bag When a Driver Is Out-Of-Position

The testing of DASS devices for the driver air bag raises the same issues as testing ones for passenger air bags. In the SNPRM, we proposed the same type of requirements for both systems.

The comments on the SNPRM were essentially the same for both types of DASS devices. The issues raised by the commenters are fully discussed under our discussion of DASS devices

for passenger air bags, presented earlier in this document.

IX. Injury Criteria

In the SNPRM, we proposed injury criteria and performance limits for each size dummy. We placed in the public docket a technical paper which explained the basis for each of the proposed injury criteria, and for the proposed performance limits. The title of the paper was: "Development of Improved Injury Criteria for the Assessment of Advanced Automotive Restraints Systems - II."

Standard No. 208 currently specifies five performance requirements for the Hybrid III 50th percentile adult male dummy in barrier crash tests: (1) dummy containment--all portions of the dummy must be contained in the vehicle passenger compartment throughout the test, (2) Head Injury Criterion (HIC) must not exceed 1,000, evaluated over a 36 millisecond (msec) duration (3) chest acceleration must not exceed 60 g's, (4) chest deflection must not exceed 76 mm (3 inches), and (5) forces transmitted axially through the upper legs must not exceed 10 kilonewtons (kN) (2,250 lb).

In the SNPRM, we generally proposed to apply these or similar injury criteria, and a new one addressing neck injury, to all of the dummies and tests, other than static suppression tests, covered by the proposal. However, the criteria and performance limits would be adjusted to maintain consistency with respect to the injury risks faced by different size occupants.

A general discussion of the proposed injury criteria and performance limits, and the comments, is provided below. A more detailed discussion is provided in a supplemental technical paper titled "Supplement: Development of Improved Injury Criteria for the Assessment of Advanced Automotive Restraint Systems - II" which is being placed in the public docket.

A. Head Injury Criteria

In the SNPRM, to address the risk of head injury, we proposed limits for the head injury criterion (HIC) for the 50th percentile adult male, 5th percentile adult female, 6-year-old child, 3-year-old child and 12-month-old infant dummies.

The proposed HIC differed from that currently included in Standard No. 208 in that it would be evaluated over a 15 msec duration instead of 36 msec. This change was based on a recommendation by AAMA. That organization had recommended that the duration for the HIC computations be limited to 15 milliseconds with a limit of 700 for the 50th percentile adult male dummy. This proposed value is consistent with Canadian Motor Vehicle Safety Standard No. 208.

We noted in the SNPRM that the stringency of HIC 15/700 and HIC 36/1000 appears to be equivalent for long duration pulses. This is because while HIC 15 produces a lower numerical value for long duration events, its lower failure threshold, 700, compensates for this reduction. We also noted that for pulse durations shorter than approximately 25 milliseconds, the HIC 15/700 requirement is more stringent than the HIC 36/1000 requirement. We stated that we believed this increased stringency would provide a desirable added measure of safety for the highly scaled, short duration HIC limits proposed for evaluating those impact events where children and small-statured adults are involved.

In the SNPRM we accordingly proposed to employ a 15 millisecond time interval whenever calculating the HIC function and to limit the maximum response of the adult male to 700 and limit the response of the smaller dummies to suitably scaled maximums.

Commenters generally supported our proposal concerning HIC 15. However, AAM

recommended that we adopt somewhat higher limits than we proposed for the 5th percentile adult female dummy (779 rather than 700) and the 6-year-old child dummy (723 rather than 700). That organization argued that we were not consistent in applying scaling relationships from the 50th percentile adult male dummy to the other dummies.

After considering the comments, we have decided to adopt the limits we proposed. We note that the data from which the HIC relationship was developed represented an elderly adult population.[24] There is no basis to assume that the population had the dimensions of 50th percentile adult males. We believe it is reasonable to apply the same 700 HIC limit to all persons who may be represented by the original data set, including 5th percentile adult females and 50th percentile adult males.

As to child dummies, in the absence of biomechanics data on the skull fracture and brain injury tolerances for children, we began by utilizing a scaling process to account for differences in both geometric size and material strength. However, after applying the scaling process, judgment must be used to determine if the scaled values are reasonable.

For the 6-year-old child dummy, geometric and material scaling led to a limit of 723, which is higher than the 700 limit for adult dummies. However, in the absence of biomechanical data that substantiate a higher head injury tolerance for young children than for adults, we believe it is prudent and reasonable to limit the HIC value to 700 for the 6-year-old dummy.

B. Neck Injury Criteria

In the SNPRM, to address the risk of neck injury, we proposed limits for the Nij neck

---

[24] Hodgson, V.R., Thomas, L.M., "Comparison of Head Acceleration Injury Indices in Cadaver Skull Fracture," SAE Paper No. 7 10854, Proceedings of the Fifteenth Stapp Car Crash Conference, 197 I.

injury criterion for the 50th percentile adult male, 5th percentile adult female, 6-year-old child, 3-year-old child and 12-month-old infant dummies, Nij is a new injury formula that accounts for the combination of flexion, extension, tension, and compression.

The sled test option in Standard No. 208 currently addresses the risk of neck injury by means of separate limits on these four measurements as well as shear. We proposed Nij as an improvement over separate limits because it accounts for the superposition of loads and moments, and the additive effects on injury risk.

The most significant comment on this issue came from AAM, which endorsed the Nij concept but recommended the inclusion of additional, more stringent tension/compression limits to independently control these potentially injurious loading modes. AAM also recommended further, minor adjustments to the proposed critical limits depending on whether they are being utilized for in- or out-of-position situations. AAM, IIHS, and NTSB stated that they were concerned that the peak tension and peak compression allowed by the Nij criteria when the moment value is zero are too great.

We believe that there is merit in incorporating AAM's recommended additional tension/compression limits and adjustments to our original Nij proposals because they either mimic our originally proposed requirements very closely or add additional requirements that more stringently control potentially injurious loading modes. In addition, we accept an argument made by AAM that tensed neck muscles mitigate the effects of measured neck loads and will adopt that organization's recommendation for slightly higher neck limits for in-position testing for the adult dummies. However, because one would not expect muscle tensing in a situation simulated by the 5th percentile female out-of-position low risk deployment tests, we are

requiring manufacturers to meet more stringent criteria for Nij in those tests.

DaimlerChrysler argued that tension should be the only neck injury criterion with the current Hybrid III dummy neck because it believes the neck may be inadequate for accurately assessing the potential for flexion/extension neck injury due to air bag loading. Toyota also recommended delaying the use of any neck injury criteria that contains extension. As discussed later in this document, we believe the current Hybrid III neck is adequate for the purposes of this rulemaking. Moreover, we are adopting Nij as the best available neck injury criterion.

C. Thoracic Criteria

In the SNPRM, to address the risk of thoracic injury, we proposed individual limits on chest acceleration and chest deflection. This is the same approach as is currently used in Standard No. 208. However, we proposed to reduce the current deflection limit for the 50th percentile male dummy from 76 mm to 63 mm (from 3 in to 2.5 in).

To obtain equivalent performance limits for the other size dummies, the mid-size male dummy limits were scaled, taking into account both geometric and material differences. We also considered other factors. We did not propose a chest deflection limit for the 12-month-old CRABI dummy because that dummy does not measure chest deflection.

AAM supported individual limits on chest acceleration and chest deflection but argued that the chest acceleration limit for the 5th percentile adult female dummy should be 73 g's rather than the 60 g's proposed in the SNPRM. This was reiterated by some other commenters as well.

AAM also requested slight adjustments in deflection limits for the 3-year old and 5th percentile adult female dummies. In addition, AAM recommended the use of an additional criterion, rate of sternal deflection, to assess the risk of serious thoracic organ injuries in out-of-

position tests. Toyota recommended using the rate of sternal deflection in place of chest acceleration for assessing thoracic injury risk. DaimlerChrysler presented a method using Kalman filters which it argued would result in a more reliable rate of deflection measures using chest deflection and acceleration measurements.

After considering the comments, we are adopting the proposed 60 g's chest acceleration limit for the 5th percentile adult female dummy. AAM's recommended chest acceleration limit of 73 g's for this dummy was obtained using scaling procedures that only considered the effects of the geometric differences between 50th percentile adult males and 5th percentile adult females. However, we believe the additional effect of decrease in bone strength for the more elderly female population at risk in out-of-position situations should also be taken into account.

The differences between our proposed deflection limits and those recommended by AAM are negligible. AAM recommended a chest deflection limit of 64 mm for the 50th percentile adult male dummy. In order to harmonize with the chest deflection limits used by Transport Canada, we proposed a 63 mm for chest deflection limit for the 50th percentile male. While we used the same scaling factors as the industry, this difference in the limit for the 50th percentile adult dummy accounts for the small differences (< 2 mm) between the industry's recommendations and our proposals for some of the other dummies. Because these differences are negligible and because the proposed limit for the 50th percentile adult male dummy is consistent with international harmonization, we are adopting the limits proposed in the SNPRM.

As to AAM's recommendation to use the rate of sternal deflection to assess the risk of serious thoracic organ injuries in out-of-position tests, we believe further analysis and research would be needed before such a new injury criterion could be added to Standard No. 208. We

note that vehicle manufacturers are free to voluntarily consider rate of sternal deflection as they design their vehicles.

D. Other Criteria

In the SNPRM, we proposed to apply a dummy containment requirement to all of the dummies except the 12-month-old infant dummy, and limits on upper leg forces to the 50th percentile adult male and 5th percentile adult female dummies. We believed the dummy containment requirement would not be relevant to the proposed low risk deployment test using the 12-month-old infant dummy, and that limits on upper leg forces would not be relevant to the proposed low risk deployment tests using the 12-month-old infant and 3- and 6-year-old child dummies.

More specifically, with respect to limits on upper leg forces, we proposed to limit the axial loads in the femur for the adult dummies (10 kN for the 50th percentile male and 6.8 kN for the 5th percentile female). AAM and DaimlerChrysler stated that they support slightly more stringent femur limits of 9.1 kN for the 50th percentile male and 6.2 kN for the 5th percentile female.

After considering the comments, we are adopting the axial femur limits for the adult dummies as proposed. The current limit of 10kN specified for the 50th percentile male has been used in Standard No. 208 for many years. AAM has not presented information demonstrating that this value does not adequately ensure protection. Furthermore, AAM has not provided data or an explanation of the method it used to arrive at its recommended femur force limit for the 50th percentile male.

The differences between the limits proposed in the SNPRM and those recommended by

AAM are small, and adopting the slightly lower value recommended by AAM will have no effect on the overall safety benefits. We also believe that the slightly higher axial force limits we are adopting today may provide design flexibility for manufacturers to optimize head, neck and chest protection for the 50th percentile male and the 5th percentile female. Of course, vehicle manufacturers are free to voluntarily meet more stringent limits than those included in Standard **No.** 208.

X. Lead Time and Effective Date

TEA 21 specifies that the final rule on advanced air bags must become effective in phases as rapidly as practicable beginning not earlier than September 1, 2002, and not sooner than 30 months after the issuance of the final rule, but not later than September 1, 2003. Except as noted below, the phase-in of the required amendments must be completed by September 1, 2005. If the phase-in of the rule does not begin until September 1, 2003, we are authorized to delay the completion of the phase-in until September I, 2006. As also noted below, other amendments may be phased in later.

A. Large Manufacturers

In the SNPRM, we proposed the following phase-in schedule, which would apply to all large manufacturers; i.e., those producing more than 5,000 vehicles per year worldwide:

25 percent of each manufacturer's light vehicles manufactured during the production year beginning September 1, 2002;

40 percent of each manufacturer's light vehicles manufactured during the production year beginning September 1, 2003;

70 percent of each manufacturer's light vehicles manufactured during the production year

beginning September 1, 2004;

All vehicles manufactured on or after September 1, 2005.

We noted that the proposed date for the start of the phase-in, September 1, 2002, would be 30 months after a final rule that was issued on March 1, 2000. We stated that this proposed date reflected the seriousness of the safety problem being addressed and the statutory requirement that the final rule become effective as rapidly as possible.

We also requested comments on phase-in schedules and percentages other than the proposed 25%-40%-70%-100% schedule. We cited the example of a 40%-70%-100% schedule beginning one year later than the proposed schedule, but ending at the same time. This alternative was like the primary proposal, except that the first year of the proposed phase-in would be eliminated. We noted that this alternative schedule would offer additional leadtime at the beginning of the phase-in, while not compromising the final effective date for all new vehicles. We also noted that with the availability of credits for early compliance, a manufacturer also would have additional time to develop and produce early-complying vehicles to meet the initial phase-in percentages.

We noted that while we had limited discretion in deciding when to make the final rule effective, we also have some discretion to make temporary adjustments in requirements if, in our judgment, such adjustments are necessary or prudent to promote the smooth and effective implementation of the goals of TEA 21 through the introduction of advanced air bags. We noted that the final rule could temporarily reduce the injury criteria or test speeds during the TEA 21 phase-in and then terminate those reductions at the end or after the end of that phase-in.

AAM, GM, DaimlerChrysler and Honda all supported a phase-in that would not begin

until September 1, 2003 and that was not fully effective until September 1, 2006. The primary arguments offered for delaying the phase-in were the pending new test dummy regulations and the remaining uncertainty of the advanced air bag technologies. Honda also asserted that the barrier tests using the 5th percentile adult female test dummy should be delayed until after final dummy specifications and revised seating procedures are issued, perhaps until September 1, 2005.

CEI/CA argued that NHTSA's existing air bag experience should lead it to reject any mandate requiring technology and designs that are still under development. At a minimum, according to CEI/CA, the agency should establish requirements will not take effect until real-world data on such systems exists and has been analyzed. To the extent that it is statutorily constrained on this matter, it should set lead times at the absolute statutory maximum. These concerns are addressed in the section of this document dealing with unintended consequences.

Public Citizen, CU, and CAS stated that manufacturers should not be given undue latitude in meeting the advanced air bag requirements. These groups said that the manufacturers had repeatedly stated during the drafting of TEA 21 that they would need not more than 30 months in which to implement the new designs. The groups also noted that some manufacturers are already introducing some types of advanced air bag technologies. Public Citizen argued that the agency should give greater weight to the command in TEA 21 that the final rule shall take effect as rapidly as possible, the history of manufacturers' assertions of the "impossibility" of complying with new regulatory requirements, the test results of MY 1999 vehicles, and the absence of data from manufacturers to substantiate their claim that the technology is not yet available.

The NTSB expressed disappointment that it would be MY 2006 before all new vehicles would be equipped with advanced air bag systems. It suggested that NHTSA encourage manufacturers to install advanced air bags prior to the established phase-in schedule, perhaps through an incentive program.

We have decided to implement a two-stage phase-in for advanced air bags. In the first phase-in, all portions of the final rule will be implemented, except the 56 km/h (35 mph) belted rigid barrier test. The first phase-in will be implemented as follows:

- 35 percent of each manufacturer's light vehicles manufactured during the production year beginning on September 1, 2003 with an allowance of advance credits for vehicles built after the effective date of the final rule;
- 65 percent of each manufacturer's light vehicles manufactured during the production year beginning on September 1, 2004 with an allowance of carryover credits from prior years;
- 100 percent of each manufacturer's light vehicles manufactured during the production year beginning on September 1, 2005 with an allowance of carryover credits from prior years; and,
- All light vehicles manufactured on or after September 1, 2006.

In the second phase-in, the belted rigid barrier test at 56 km/h (35 mph) using the 50th percentile adult male dummy will be implemented. It will be phased in as follows:

- 35 percent of each manufacturer's light vehicles manufactured during the production year beginning on September 1, 2007 with an allowance of advance credits for vehicles built after September 1, 2006;
- 65 percent of each manufacturer's light vehicles manufactured during the production year

beginning on September 1, 2008 with an allowance of carryover credits from prior years in the second phase-in;

- 100 percent of each manufacturer's light vehicles manufactured during the production year beginning on September 1, 2009 with an allowance of carryover credits from prior years in the second phase-in; and,
- All light vehicles manufactured on or after September 1, 2010.

We have decided to delay the start of the first phase-in until September 1, 2003 because of the number of new measures that manufacturers will have to take in order to certify a vehicle as complying with the advanced air bag requirements (i.e., meet new injury criteria, meet various test requirements with four new dummies, and meet the suppression and low risk deployment tests associated with air bag risk reduction). We note that the manufacturers' concerns over the pending dummy rulemakings and the seating procedure for the 5th percentile adult female dummy have been largely resolved by now. As an initial matter, all applicable dummies have now been incorporated into 49 CFR Part 572, although petitions for reconsideration are currently pending." Additionally, the seating procedure for the 5th percentile adult female is established in today's rule. We are confident that large vehicle manufacturers can meet the phase-in. As required by TEA 21, we are including provisions under which manufacturers to earn credits towards meeting the applicable phase-in percentages if they meet the new requirements ahead of schedule.

B. Limited Line, Small, Multi-Stage Manufacturers and Alterers

[25] Likewise, the final rule incorporating the offset deformable barrier into 49 CFR Part 587 was issued in March. 2000.

1. Limited Line Manufacturers

A phase-in generally permits vehicle manufacturers flexibility with respect to which vehicles they choose to initially redesign to comply with new requirements. However, if a manufacturer produces a very limited number of lines, e.g., one or two, a phase-in would not provide such flexibility. Accordingly, we proposed to permit manufacturers that sell two or fewer carlines in the United States the option of omitting the first year of the phase-in if they achieved full compliance for the second year of the phase-in. We proposed to limit this alternative to manufacturers that produce two or fewer carlines in light of the statutory requirement concerning when the phase-in is to begin. We explained that absent such a limitation, it would technically be possible for the industry as a whole to delay introducing any advanced air bags for a year.

Porsche supported permitting manufacturers that produce two or fewer carlines the option of omitting the first year of the phase-in if they achieve full compliance during the second. In addition, Porsche recommended specifying that the alternative phase-in for limited line manufacturers is available to manufacturers who meet the "two carline or fewer" criteria at any time between publication of the final rule and the start of the phase-in. Porsche argued that such a specification would resolve any possible confusion over whether the provision applies to manufacturers who, during the phase-in, evolve from a two carline manufacturer into a three or more carline manufacturer.

We have decided to permit manufacturers that sell two or fewer carlines in the United States at the beginning of the first year of each phase-in (September 1, 2003 and September 1, 2006) the option of omitting the first year of each phase-in if they achieve full compliance by September 1, 2004, the beginning of the second year of the first phase-in and September 1, 2008,

the beginning of the second year of the subsequent phase-in, This option is available only for limited line manufacturers since it would otherwise be possible for the industry as a whole to delay introducing any advanced air bags for a year.

We decline to adopt Porsche's suggestion that this option be available for manufacturers which meet the "two carline or fewer" criterion at any time between publication of the final rule and the start of the phase-in. As manufacturers produce more lines, the rationale for this option diminishes. Therefore, any manufacturer that evolves from a two carline manufacturer into a three or more carline manufacturer during each phase-in will not qualify for the applicable limited line alternative phase-in, We believe that manufacturers will know in advance if they plan to evolve from a two carline manufacturer into a three or more car line manufacturer well before the phase-in and can plan their compliance accordingly.

2. Small Manufacturers

To accommodate the needs of small volume manufacturers (SVMs), we proposed giving those manufacturers the option of waiting until the end of the phase-in to meet the new requirements. We explained that we were proposing to treat SVMs differently because of the complexity of the new requirements and the relatively short lead time before the phase-in begins. We explained that even the more streamlined set of requirements proposed in the SNPRM would require significant design changes and significant new testing. However, since the SVM provision would effectively allow SVMs to avoid the phase-in entirely, we also proposed to limit this option to manufacturers that produce fewer than 5,000 vehicles per year worldwide.

The Coalition of Small Volume Automobile Manufacturers (COSVAM) supported permitting SVMs to wait until the end of the phase-in to meet the new requirements. COSVAM

stated that SVMs need until the end of the phase-in because they cannot obtain new technology at the same time it is made available to large manufacturers, because they have difficulty getting suppliers to sell to them at all, and because some SVMs source from large manufacturers and may source parts from a model which will not comply until the end of the phase-in. COSVAM also asked that the definition of small manufacturer for purposes of exclusion from the phase-in requirements be changed to include manufacturers that produce not more than 10,000 vehicles. COSVAM argued that the definition of small volume manufacturer should be based on the agency's overall statutory scheme and not on current production volumes.[26]

We recognize the technical challenges SVMs will face as a result of the requirements included in today's rule. In addition, while we recognize the importance of providing SVMs with sufficient lead time to comply with the new requirements, we note that we do not have unlimited discretion as to how much leadtime we can provide. TEA 21 provides that if the phase-in begins on September 1, 2003, the final rule must become fully effective by September 1, 2006. No exceptions are given for small volume manufacturers. We have decided, therefore, to exercise the discretion we do have and not require SVMs to comply before the end of each phase-in period (September 1, 2006 and September 1, 2010, respectively). However, we are continuing to limit this provision to manufacturers that produce fewer than 5,000 vehicles per year worldwide. We note that COSVAM did not provide any analysis demonstrating a need to increase the number beyond 5,000.

---

[26] **Under** 49 U.S.C. 30113(d) **and** 49 U.S.C. 30113(b)(3)(B)(i) **, manufacturers whose total motor vehicle production in the most recent year of production is not more than** 10,000 **may, on the basis of economic hardship, apply for a temporary exemption from the requirements of any of the Federal motor vehicle safety standards.**

3. Multi-Stage Manufacturers and Alterers

Although we received comments in response to the original NPRM requesting that we provide an additional extension for multi-stage manufacturers and alterers beyond the end of the phase-in for large manufacturers, we did not propose such an extension in the SNPRM. We explained that we have limited discretion as to how much lead time we can provide, since TEA 2 1 provides no exceptions for multi-stage manufacturers or alterers. TEA 21 provides that if the phase-in begins on September 1, 2003, the final rule must become fully effective by September 1, 2006.

We stated in the SNPRM that final stage manufacturers are accustomed to completing vehicles within limitations identified by chassis manufacturers so that they can certify their vehicles with limited or no additional testing. Therefore, we stated that the industry should be able to address the issues raised by the advanced air bag rulemaking. We also urged chassis manufacturers to communicate with their multi-stage manufacturer customers as soon as possible concerning any new limitations that may be imposed as a result of the advanced air bag requirements. We stated that the chassis manufacturers should be able to identify the type and likely scope of any such new limitations well before the end of the phase-in.

The Recreation Vehicle Industry Association (RVIA) (a trade association representing more than 95% of the van conversion industry) contended that its members need at least one year of lead time following full implementation of the new requirements for the large manufacturers. RVIA stated that this additional time is needed so that its members can obtain timely information from the chassis manufacturers, since guidance from incomplete vehicle manufacturers is

generally not available until at or very near the startup of new or updated model production.

RVIA supported allowing small volume final stage manufacturers and alterers to certify compliance with a generic sled test pulse, arguing that if final stage manufacturers install seating systems within the guidelines established by the chassis manufacturers, further full scale barrier crash testing is no longer necessary and should not be the only method available for determining compliance. RVIA stated that the potential technical and financial burden of the proposed full scale barrier dynamic testing requirements jeopardized the continued viability of small volume multi-stage manufacturers.

The National Truck Equipment Association (NTEA) supported the proposal to allow manufacturers of multi-stage vehicles to defer compliance until the end of the phase-in period. NTEA explained that given the level of research and testing likely to be required by the final rule, manufacturers of multi-stage vehicles need as much time as possible to generate the compliance information needed to certify these vehicles.

We estimate that several hundred intermediate or final-stage vehicle manufacturers and alterers will be affected by today's rule. Multi-stage manufacturers modify incomplete vehicles (chassis), while alterers modify completed new vehicles that have been certified by their manufacturer as being in compliance with all applicable safety standards. With respect to Standard No. 208, most of the difficulties for multi-stage manufacturers and alterers involve changes to the vehicles' seats. If the advanced air bag system installed by the original vehicle or chassis manufacturer employs the seat as part of the system, by using such features as weight or position sensing components in the seat, any change to the vehicle's seat could affect the manufacturer's original certification. If the original manufacturer uses a weight or pressure

system in the seat to turn the air bag off in appropriate circumstance, these manufacturers face a choice of using the original seat as is, relying on a supplier to provide the same sensing technology for their seats, or else certifying in some other way.

We recognize that the set of requirements contained in today's rule will require significant design changes and significant new testing for all cars and light trucks. We also recognize the importance of providing all manufacturers, including multi-stage manufacturers and alterers, with sufficient lead time to comply with the new requirements. We note, however, that we do not have unlimited discretion as to how much lead time we can provide. According to TEA 21, if the phase-in begins on September 1, 2003, the final rule must become fully effective by September 1, 2006. There are no exceptions for multi-stage manufacturers and alterers.

We appreciate the technical challenges multi-stage manufacturers and alterers will face as a result of the requirements included in today's rule. In an effort to address the needs of these small businesses, we have decided to allow multi-stage manufacturers and alterers to defer compliance until the end of each phase-in period (September 1, 2006 and September 1, 2010, respectively).

We believe that delaying the implementation schedule for multi-stage manufacturers and alterers strikes the appropriate balance between improving air bag safety, particularly for infants, children, and small-statured adults, while accommodating the needs of these manufacturers. We believe that this approach will increase the likelihood that multi-stage manufacturers and alterers will know what type of advanced air bag technology chassis and vehicle manufacturers are using well before they need to comply. This should provide them sufficient time to address any technical issues associated with advanced air bag technology and to generate whatever

compliance information may be needed.

XI. Availability of Original Equipment and Retrofit Manual On-Off Switches

Standard No. 208 currently includes a temporary provision permitting manufacturers to provide as original equipment (OE) manual on-off switches for air bags in vehicles without rear seats or with rear seats too small to accommodate a RFCSS. This provision is scheduled to expire on September 1, 2000.

Also, on November 11, 1997, we published in the Federal Register (62 FR 62406) a final rule exempting, under certain conditions, motor vehicle dealers and repair businesses from the "make inoperative" prohibition in 49 U.S.C. 30122 by allowing them to install retrofit manual on-off switches for air bags in vehicles owned by people whose request for a switch is authorized by NHTSA. The final rule is set forth as 49 CFR Part 595, Retrofit On-Off Switches for Air Bags.

The purpose of the exemption was to preserve the benefits of air bags while reducing the risk of serious or fatal injury that current air bags pose to identifiable groups of people. In issuing that final rule, we explained that although vehicle manufacturers were beginning to replace current air bags with new air bags having some advanced attributes, i.e., attributes that will automatically minimize or avoid the risks created by current air bags, an interim solution was needed for those groups of people at risk from current air bags in existing vehicles.

In the SNPRM, we proposed to allow both OE on-off switches and retrofit on-off switches to be installed under the same conditions that currently govern such installation in all vehicles produced prior to September 1, 2005, the date we proposed to require all vehicles to have an advanced air bag system. We proposed to prohibit both OE switches in, and retrofit

switches for, vehicles manufactured after the end of the phase-in. We noted that while we believed that reliable and safe air bag systems could be developed in a timely manner, thus removing the need for an on-off switch, we were concerned that those individuals who are currently at risk from air bags might lack confidence in the new systems, particularly when they are first introduced. However, we believed this problem would diminish during the course of the phase-in, as consumers heard about, and became familiar with, advanced air bags.

Comments were submitted by AAM, DaimlerChrysler, Ford, Toyota, AORC, Autoliv, Advocates, NADA, and Parents for Safer Air Bags. Except for NADA, all commenters supported allowing manual on off-switches, both retrofit and OE, after the end of the phase-in. Some of the commenters supported an indefinite allowance, while others supported the agency revisiting the issue at the end of the phase-in. Additionally, Ford urged that we allow shunts, which would permanently deactivate an air bag, rather than retrofit on-off switches for vehicles with advanced air bag systems, stating that the market incentive to continue to produce retrofit switches is too small. NADA supported eliminating retrofit on-off switches for vehicles with advanced air bags, but allowing OE switches as a method of suppression compliance in vehicles where OE switches are currently allowed.

We believe that by the end of the initial phase-in, manufacturers will have developed advanced air bag systems for most vehicles that are sufficiently reliable to obviate the need for manual air bag on-off switches. However, public acceptance of those advanced air bag systems may not be assured. Allowing on-off switches for some period after all vehicles are equipped with advanced air bag systems will provide parents with additional confidence until the reliability of all such systems has been verified based on real-world experience.

We continue to believe, however, that allowing manufacturers to install switches indefinitely would be counter-productive. The switches provide an opportunity for misuse. Adults could turn off their passenger air bag systems even though those systems pose virtually no risk to an adult occupant, particularly one who is belted. In such circumstances, the occupant would not receive the benefit of the air bag in a high-speed crash. The same possibility for misuse would exist for children in vehicles certified to the low risk deployment option.

Accordingly, we have decided to allow both OE and retrofit air bag on-off switches until September 1, 2012, two years after the end of the second phase-in. This additional time will allow manufacturers to perfect the suppression and low risk deployment systems in all their vehicles. Additionally, it will provide parents with additional time to satisfy themselves that the advanced systems work. Should we decide there is a continuing need for manual on-off switches beyond 2012, we can initiate rulemaking to extend the date at that time.

We note that there will be some need for deactivation of some sort (via on-off switch or permanently) for at-risk individuals who cannot be accommodated through sensors or other suppression technology (such as handicapped individuals or individuals with certain medical conditions). At this point in time, we believe such needs can be best accommodated through the permanent deactivation authorization system currently used by NHTSA. This system allows the use of shunts as suggested by Ford in its comments.*'

XII. Warning Labels, Consumer Information, and Telltale Devices

---

[27] Ford had also suggested that shunts be allowed in lieu of on-off switches. These shunts would permanently deactivate the air bag. We believe that allowing permanent deactivation for anyone other than individuals with special needs would not serve a safety need. Accordingly, we are rejecting this option.

A. Warning Labels and Consumer Information

On November 27,1996, we published in the Federal Register (61 FR 60206) a final rule which, among other things, amended Standard No. 208 to require improved labeling on new vehicles to better ensure that drivers and other occupants were aware of the dangers posed by passenger air bags to children.

After reviewing the comments on the NPRM, we proposed in the SNPRM a replacement for the permanent sun visor label which contained statements taken from the 1996 labels regarding belt use and seating children in the rear seat. We also proposed substituting the word "CAUTION" for the word "WARNING" in the heading of the label. Finally, we proposed a new graphic which showed a cut-away side view of a vehicle with a belted driver and a child in a child seat in the rear. In addition, NHTSA proposed a new temporary label that states that the vehicle meets the new requirements for advanced air bags. These proposals were in response to commenters concerns that some types of warnings should be retained for advanced air bags.

Consistent with our proposal to require labels for vehicles with advanced air bags, we proposed to drop the current definition of "smart passenger air bags" contained in S4.5.5 and an existing option to remove warning labels in vehicles with air bags that meet that definition (S4.5.1).

In order to provide consumers with adequate information about their occupant restraint system, we proposed to require manufacturers to provide a written explanation of the vehicle's advanced passenger air bag system. We indicated that this explanation would probably be included in the vehicle owner's manual, although we requested comments on whether it would be desirable to have this information located elsewhere. Under our proposal, the explanation

would need to include a discussion of the proper functioning of the advanced passenger air bag system and provide a summary of the actions that may affect the proper functioning of the system.

Fifteen commenters addressed the proposed changes to the air bag warning labels. Of these, five said little more than an expression of support for the proposal without much elaboration. On the other hand, four commenters representing consumer groups expressed strong concerns about any changes that "weakened" the warnings concerning air bags until the air bags meeting these new requirements are demonstrated to be effective in eliminating the risks associated with current air bags. One commenter also stated that research should be conducted before the air bag warning labels are changed. Additionally, very few commenters addressed our request for comments on the new graphic described above versus the previous graphic, which shows a rear-facing child seat being struck by an air bag.

After reviewing the comments, we have decided to change the proposed label to reduce the perceived "weakening." First, we have decided to continue to use "WARNING" in the heading rather than "CAUTION" as we proposed in the SNPRM. Since no one objected to the proposed graphic, we are adopting the new graphic to help consumers distinguish between vehicles with various generations of air bags.

One commenter asked us to allow the new labels in any vehicle certified to the new requirements, rather than limiting their usage to vehicles manufactured after September 1, 2002. Because manufacturers will be allowed to certify vehicles to the new requirement prior to this date, we are removing this restriction.

One commenter also stated that the labels should be available in languages other than

English. While we are not requiring this, as with the current labels, manufacturers may provide translations of the required English language message as long as all the requirements for the English label are met, including size.

A few commenters wanted additional information added to the label related to specific issues with advanced air bags. GM wanted the option of adding instructions to inform users how to properly behave depending on whether the air bag was active or inactive. NTSB wanted to require information on what actions to take if the telltale is not illuminated. CAS suggested that information should be added explaining how belt use affects air bag performance. Because these types of information are very design specific, we are not changing the warning label to address these comments. However, we are modifying the existing prohibition against other information on the sun visor to allow manufacturers the option of adding information, on a separate label, if they believe it is desirable to supplement the owner's manual information.

With respect to the proposal requiring manufacturers to provide additional information on the performance and design of advanced air bags in the owner's manual, the few commenters who addressed this issue supported the proposal. Therefore, we are requiring the owner's manual to include accurate information on each of the topics proposed in the SNPRM, specifically:

- A presentation and explanation of the main components of the advanced passenger air bag system.
- An explanation of how the components function together as part of the advanced passenger air bag system.
- The basic requirements for proper operation, including an explanation of the

occupant actions that may affect the proper functioning of the system.

- A complete description of any passenger air bag suppression system installed in the vehicle, including a discussion of the suppression zone.
- A discussion of the telltale light on the instrument panel, explaining that the light is only illuminated when the advanced passenger air bag system is suppressed, is not illuminated when the advanced passenger air bag system is activated, and informing the vehicle owner of the method used to indicate that the air bag suppression system is not operating properly.
- An explanation of the interaction of the advanced passenger air bag system with other vehicle components, such as seat belts, seats or other components.
- A summary of the expected outcomes when child restraint systems, children and small teenagers or adults are both properly and improperly positioned in the vehicle, including cautionary advice against improper placement of child restraint systems.
- Information on how to contact the vehicle manufacturer concerning modifications for persons with disabilities that may affect the advanced air bag system.

B. Telltale Devices

In the SNPRM, we proposed that vehicles with static suppression systems would be required to have a telltale, located on the dashboard, that indicated when the passenger air bag was off. We also stated that the telltale need not illuminate when the passenger seat was empty, even if the air bag was suppressed under such a circumstance, but that each system needed to be equipped with a mechanism that indicated every circumstance when the air bag was suppressed.

Comments on the telltale were primarily from manufacturers and followed two basic themes. Some commenters argued that the requirement that the telltale be on the dashboard was overly stringent and inconsistent with the telltale location requirements for air bag on-off switches. Others commented that requiring a mechanism to determine all circumstances under which the air bag was suppressed did not make sense in the context of the telltale requirement. Ford also requested that we specifically allow more than one level of illumination to allow for changing light conditions.

We have expanded the possible locations for the telltale in the final rule. However, we have decided against simply adopting the existing on-off switch location provisions. In response to a petition for rulemaking from a manufacturer, we have allowed on-off switch telltales to be located anywhere within the vehicle interior as long as they are clearly visible to all front seat occupants. We decided to allow such a broad location for these telltales because on-off switches are only in a limited number of vehicles and because the air bags can only be suppressed when the driver or passenger consciously turns the air bag off. With static suppression systems, an individual will have no way of knowing whether the air bag is suppressed other than the telltale. Accordingly, we believe that the telltales should not be placed in a location that is arguably "clearly visible," but may not be easily seen while driving or is susceptible to being covered up. We agree, however, that restricting the telltale to the dashboard may be overly restrictive. We have changed the regulatory text to state that the telltale must be located inside the vehicle in a zone above and forward of the H-point of the driver seat, when that seat is in its forward most position. Additionally, the telltale cannot be placed in or immediately adjacent to a storage compartment if use of the compartment could block the telltale from either the driver's or

passenger's view. Thus, for example, the telltale could be located on the cover to the glove compartment, or by the rearview mirror, but could not be located behind a cup-holder.

The SNPRM did not require a single level of illumination for telltales. However, it also was not clear that multiple levels of illumination were allowed. We believe there may be a benefit to having multiple levels of illumination based on changes in the ambient light conditions. Accordingly, we have changed the regulatory text to specifically allow multiple levels of illumination as long as all levels are visible to individuals of all ages.

We are allowing the telltale to be turned off when the passenger seat is empty because we believe many manufacturers may choose to have the default setting for their suppression systems be a suppressed air bag. In such an instance, the air bag would usually be suppressed. We are concerned that the near constant illumination of the telltale could lead people to ignore the telltale. Alternatively, people could attempt to disconnect the telltale so that they did not have to look at it all the time.

In order to accommodate a design where the telltale was not illuminated when the seat was empty, but still allow for compliance testing of all of the proposed child seating positions, some of which could look to a suppression system like the seat was empty, we added a requirement that the vehicle come equipped with a mechanism that would indicate under all circumstances whether the passenger air bag was suppressed. The mechanism need not be contained within the interior of the vehicle, but could be a simple plug-in system where a piece of equipment is plugged into an outlet and provides the needed information, Alternatively, the mechanism could be the telltale that is required for all suppression situations other than an empty seat. In that instance, the telltale would need to illuminate in any of the test positions NHTSA

used for compliance purposes.

XIII. Miscellaneous Issues

A. Child Restraints Used for Testing Suppression and Low-Risk Deployment Features

As discussed earlier in this notice, we proposed in the SNPRM to require manufacturers to assure compliance with tests to minimize the risks from air bags to infants and young children using any child restraint on a specified list of representative child restraints that was appropriate for a child the size of the applicable dummy. In developing the proposed list of representative child restraints, we attempted to select seats that are produced by various manufacturers while limiting the overall number of restraints. We proposed to add the list of child restraints as an appendix to Standard No. 208, and indicated that we planned to update the list from time to time (with appropriate lead time).

Comments can be broken down into four separate areas: NHTSA should develop a common "footprint" for testing, the proposed list contains too many restraints, the proposed list does not contain enough restraints, and the list is either outdated or insufficiently detailed.

AAM, GM, Volkswagen, DaimlerChrysler and AORC all urged NHTSA to develop a standard "footprint" that could be used to certify compliance with our suppression tests. Takata did not believe a single footprint was necessary, but urged that the number of potential footprints on child restraint systems be severely limited. These same commenters, along with Isuzu, stated that the list of child seats was still too long and should either be reduced or manufacturers should be allowed to certify to no more than three seats in each category, at the manufacturer's option. The CAS argued that the list should be longer, and the American Academy of Pediatrics (AAP)

urged us to add an oversized child seat designed for special needs children. Takata noted that the list did not include specific model numbers, and Evenflo noted that some of its seats on the list were no longer available or had been replaced by a different model.

We agree with manufacturers that a common footprint test device would considerably ease their ability to meet the static suppression performance requirements for infants and for three-year-olds and six-year-olds in child restraints. We also agree that our initial proposal to test with any seat produced over a ten-year period was overly expansive. However, the proposed number of seats in the SNPRM was dramatically reduced from the NPRM. These seats are real designs that are actually in use, not a test device which would never be used by a child. The only way we could guarantee that child restraints matched the footprint of this hypothetical test device would be to require the footprint to be incorporated into all child restraints. Even if we did not require that restraint manufacturers use the specific footprint, we would effectively limit their ability to produce any other type of restraint, since they could not assure parents that their seats would work with a vehicle's suppression system. Accordingly, we believe adopting a uniform test device with a specific footprint is inappropriate and overly design restrictive. Given the relatively small number of restraints on our list, we see no need to develop a specific test device.

Likewise, we do not believe that manufacturers should have the option of certifying to only a limited number of the restraints on the list. We do not believe that requiring compliance with 24 seats is excessive, given the importance of reliability in a suppression system and the fact that the suppression tests are nondestructive. Children sitting in the front seat will not receive the benefit of a suppression system that does not recognize their presence in the seat. If manufacturers believe their planned suppression technology is insufficient to detect a wide

variety of child restraints, they will need to either improve or supplement that technology."

We do believe, however, that the seats on the list are adequately representative of both child restraint designs and manufacturers.[29] Accordingly, we do not agree with the CAS that the list should be expanded. Nor do we believe it is necessary to add an oversized seat, as recommended by the AAP. These larger seats are not representative of seats that are typically found in vehicles and may be used by children who are considerably heavier than an average six-year-old. While these children should receive as much assurance of safety from a deploying air bag as all other children, we believe their needs can be accommodated by other means. Permanent air bag deactivation will continue to be available for individuals with unique medical or physical needs.

Based on Evenflo and Takata's concerns that the proposed list was insufficiently detailed and out-of-date, we have amended the list by replacing restraints that are no longer available and providing model numbers. We have also tightened up the language of Appendix A so that the designated restraints are limited by a production date closer in time to the effective date of the final rule. As stated in the SNPRM, the list will be updated periodically to subtract restraints that

---

[28] We recognize that a manufacturer choosing the low risk deployment option for infants would be required to assure compliance with the applicable injury criteria with a 12-month-old dummy in each of the restraints listed in sections B and C of Appendix A, making the restraint unusable in subsequent tests. However, we believe the low risk deployment for properly restrained infants to be the most important low risk test in this rulemaking, as an infant's head would always be in close proximity to a deploying air bag.

[29] In no way does the inclusion of a particular restraint on the list represent an endorsement of that restraint by the agency. Restraints have been placed on the list because we believe they are representative of many products on the market, not because they offer a unique design that we believe is somehow superior to other designs. Likewise, the choice of restraint manufacturer is not based on any belief by the agency that a particular manufacturer produces restraints that are superior to those of other manufacturers. Restraints were chosen from a variety of manufacturers so as to adequately survey the design decisions of the entire population of restraint manufacturers.

are no longer in production and to add new restraints, particularly those that are manufactured in accordance with recent amendments to Standard No. 213, Child Restraint Systems, (64 FR 10786, March 5, 1999), that require child restraints manufactured on or after September 1, 2002, to have components that attach to the lower anchors of a vehicle's child restraint anchorage system. (The March 1999 rule requires the anchorage systems to be installed on a phased-in basis in new vehicles beginning September 1, 2000.) At this time we do not contemplate increasing the overall size of the list. Some period of lead time will be provided so that manufacturers have adequate time to incorporate any needed design changes into their air bag systems,

B. Dummy Positioning for Static Suppression and Low-Risk Deployment Tests

AAM, GM, Toyota, Isuzu and DaimlerChrysler all argued in their comments that the static suppression tests were too burdensome, largely because of the range of seat back angles (from the nominal design position up to 25 degrees rearward of that position) and seat track positions (any position on the seat track or any height for adjustable seats). Breed Technologies stated that it did not believe the low risk test procedures adequately accounted for differences in vehicle geometry and that they were sufficiently ambiguous to lead to variations in procedure by different testing laboratories.

As discussed earlier in this document, in view of the fact that parents or caregivers who place children or child restraints in the front seat will not all use a single seat track position, we have determined that there is a need to test in different seat track positions. However, we have also concluded that there is no need to conduct suppression tests at every possible seat track

position. Accordingly, we have decided that for vehicles certified to the suppression option, we will test only at the vehicle seat's full-rear position, mid-track position and full-forward position. In instances in which the infant restraint contacts the dashboard in the full-forward position, the vehicle seat will be moved back to the next detent that allows for clearance, or, in the case of automatic seats, until a maximum of 5mm (0.2 in) of clearance is achieved. Likewise, in tests involving suppression systems for 3-year-old and 6-year-old children, if the dummy or child would interfere with the dashboard, the vehicle seat will be moved back in a similar manner.

We have also determined that in many of the tests, testing with the seat back positioned 25 degrees rearward of the vehicle seat's nominal design position for the 50th percentile male was problematic. We believe that in many vehicles it may be impossible to properly install a child restraint with the seat back reclined this far back. We also do not believe that there would be any reason to recline a seat that is occupied by a child restraint. Since all of the infant tests involve the use of some type of restraint, we have decided to limit the seat back angle for these tests to the nominal design position for the 50th percentile male. Tests involving the 3-year-old and 6-year-old children or dummies in child restraints present the same concerns and will be addressed in the same way. Likewise, many of the test procedures involving children who are not in any type of restraint are unrealistic if tested with the seat 25 degrees back from the nominal design position. For example, a kneeling child with his chest resting against the seat back would find it difficult to hold his or her position.

The one position where we will recline the seat back is the test where the child is sitting on the seat and is leaning against the seat back (S22.2.2.2, S24.2.1). This test position will be conducted with the seat back at the manufacturer's nominal design position for the 50th

percentile male and at 25 degrees rearward of that position so as to test for children who have reclined their seat backs to take a nap. If the vehicle seat does not recline that far, we will test with the seat reclined as far as possible. We agree with manufacturers that parents should not drive with their children in such a position. However, as long as manufacturers design the passenger seat to recline, we believe some parents will allow their children to lie on a reclined seat.

We have also decided to test whether the air bag system is active when the seat is occupied by a 5th percentile adult female at the seat back position achieved when positioning the fifth percentile adult female dummy in the passenger seat for dynamic tests. This should roughly approximate the nominal design position. Some commenters argued that the reclined position (i.e., 25 degrees rearward of the nominal design position) distributes an adult's weight in such a manner that a suppression system that relied heavily on weight distributed to the seat cushion may be unable to determine whether the occupant is an adult or a child. Other commenters have argued that their suppression systems can adequately detect the total weight of a reclined 5th percentile adult female. We believe that the ability to detect the total weight of the dummy in a reclined position may vary depending on the type of suppression technology used. We also believe that a reclining adult has less need for a deploying air bag than an adult who is upright, and therefor closer to the air bag at the time of deployment.

We have changed the test that determines which stage or combination of stages of the air bag to deploy in the low risk deployment tests. As discussed earlier, the low risk deployment tests will only be conducted at speeds up to 26 km/h (16 mph). Accordingly, this test will be run at 26 km/h (16 mph). If there is no air bag deployment in the test, we will deploy the first stage

of the vehicle's air bag when conducting our compliance tests.

Finally, we believe Breed's comments about the low risk deployment positions have merit. We have reduced the number of steps involved in placing the dummies because small adjustments to the procedure at each step, as well as the unique characteristics of the vehicle, could result in a final position that differed significantly from what we want, i.e., the head on the instrument panel or the chest on the instrument panel. By reducing the number of steps needed to achieve that position, we have reduced the amount of potential variability. The one exception is the low risk deployment test for both child dummies where the head is placed on the instrument panel. We have retained a specific step-by-step procedure for this test, because the location of the air bag module on the instrument panel is so variable that we are currently unable to define a position on the instrument panel that we believe with any confidence represents the worst case scenario. We do, however, have considerable experience with a step-by-step procedure. While we agree that variations in vehicle design may make it difficult to follow the test procedure, we believe that we have modified the procedure in a way that will yield appropriate and consistent results.

C. Due Care Provision

Since March 1986, Standard No. 208 has included as part of its various crash test requirements a provision stating that:

> a vehicle shall not be deemed to be in noncompliance with this standard if its manufacturer establishes that it did not have reason to know in the exercise of due care that such vehicle is not in conformity with the requirement of this standard.

In adding this provision, we cited the complexity of the rigid barrier crash test of Standard No. 208. We stated that, because of this complexity, we believed that manufacturers needed

assurance from the agency that, if they had made a good faith effort in designing their vehicles and had instituted adequate quality control measures, the vehicles would not be deemed to be in noncompliance because of an isolated failure to meet the injury criteria.

In the SNPRM, we noted that, among the Federal motor vehicle safety standards, the "due care provision" is unique to Standard No. 208. We noted further that, for a variety of reasons, we disfavor including a "due care provision" in any Federal motor vehicle safety standard. We explained that the inclusion of such a provision in a safety standard does not fit very well with the overall statutory scheme, because it introduces a measure of subjectivity into the issue of whether a vehicle complies with a standard. We also explained that, based on our experience with Standard No. 208 compliance activities, we do not believe there is an intrinsic need for a "due care provision." However, recognizing that this rulemaking for advanced air bags would require manufacturers to certify their vehicles to a significantly greater number of complex test requirements in a limited amount of time, including a 48 km/h (30 mph) unbelted test with a new dummy, we stated that we did not believe that it would be appropriate to delete the provision at this time.

Accordingly, in the SNPRM, we proposed to retain the "due care provision" and extend it to the new crash test requirements. We stated that we were not proposing to extend the provision to test requirements that do not involve crashes because these tests are not affected by the variability associated with dynamically-induced dummy movement and/or vehicle deformation.

Commenters on the SNPRM presented sharply contrasting views concerning the due care provision. Vehicle manufacturers, air bag manufacturers and the Center for Regulatory Effectiveness urged that the due care provision be extended to the new static out-of-position tests

as well as the new crash tests. They argued that there is as much variability associated with the static out-of-position tests as with crash tests, and argued that the due care provision will help resolve some practicability concerns.

Other commenters, however, argued that the due care provision is not in the public interest. Parents stated that if a vehicle's air bag system fails to meet Standard No. 208, the adverse effects on the public are the same whether or not due care was exercised by the manufacturer. That organization stated that the due care provision works against the public interest by providing vehicle manufacturers with a means of avoiding the recall of vehicles that fail to comply with Standard No. 208. Parents and Advocates also argued that the due care provision in Standard No. 208 is inconsistent with its statutory counterpart, which only relieves vehicle manufacturers of civil penalty liability if the agency concludes that the manufacturer exercised due care.

Advocates stated that if the due care provision were retained and extended to other crash tests, the provision should be completely sunsetted at the end of the TEA-21 phase-in. Other commenters opposing the due care provision included Consumers Union, Public Citizen, and CAS.

After considering the comments, we continue to disfavor including a due care provision in the Federal motor vehicle safety standards and do not believe there is a need for the due care provision in Standard No. 208. Accordingly, while we will retain the existing due care provisions for the sled test and the 48 km/h (30 mph) unbelted barrier test (both of which will expire on September 1, 2006), we have decided against including a due care provision in for vehicles certified to the advanced air bag requirements.

As an initial matter, the static suppression tests are relatively simple pass-fail tests which do not involve deployment of an air bag or measurement of injury criteria on test dummies. Accordingly, we do not believe they raise the same compliance concerns as crash tests. The conditions under which either suppression or activation is required are specific and straightforward. Further, there are substantial differences between the conditions requiring suppression and those requiring activation. While there will undoubtedly be gray zones associated with suppression devices, those gray zones should be well outside the conditions for which either suppression or activation is required by the Standard.

Additionally, there is no reason to extend the existing due care requirements for vehicles certified to the advanced air bag high speed requirements. The 48 km/h (30 mph) belted rigid barrier test has been a part of Standard No. 208 for several years and has not proven problematic for manufacturers. The 56 km/h (35 mph) belted test will not begin to be phased-in as a requirement for eight years, which should provide ample leadtime. The unbelted tests will be less stringent than the 48 km/h (30 mph) unbelted rigid barrier test that was required prior to the 1997 final rule allowing the sled test option. Our testing has indicated that manufacturers can easily meet the new injury criteria with 50th percentile adult male dummies in a 40 km/h (25 mph) unbelted test with existing air bag systems and should be able to make what ever improvements are needed to do so with 5th percentile adult female dummies without major uncertainties before they are required to certify any vehicle as meeting the advanced air bag requirements of this rule.

We do not believe that not extending the due care provision will create any significant difficulties for manufacturers, given our practices and policies with respect to the enforcement of

crash test requirements. Generally, we do not determine that a noncompliance exists merely because of an isolated test failure, if there is evidence that other tested similar units have met the Standard's performance requirements and there is no indication of the inadequate quality control procedures. Since the adoption of the provision in 1986, the agency has never found that a vehicle that failed to meet the performance requirements of the Standard should be deemed to be in compliance on the basis of the due care provision.

D. Selection of Compliance Options

In the SNPRM, we proposed to require that where manufacturer options are specified, the manufacturer would be required to select the option by the time it certifies the vehicle and would not thereafter be permitted to select a different option for the vehicle. This would mean that failure to comply with the selected option would constitute a noncompliance with the standard (as well as a violation of the certification requirement of 49 U.S.C. 30115), regardless of whether a vehicle complies with another option. We also proposed to specify that, upon request, manufacturers would be required to advise NHTSA of the compliance options selected for a given vehicle or vehicle model. On behalf of its members, AAM and AIAM argued in its joint comments that the proposed requirement does not meet the need for motor vehicle safety.

We have decided to adopt the provision proposed in the SNPRM, which is consistent with the approach we have taken in other recent rulemakings in which compliance options have been allowed. Our rationale for this approach was recently set out in some detail in our denial of a petition for reconsideration of an amendment that added a compliance option to Standard No. 201, "Occupant Protection in Interior Impact." 64 FR 69665 (December 14, 1999). We adopt that rationale for purposes of this final rule, but we are adding a short discussion to address a few

additional matters.

The final rule adopted by this notice provides numerous compliance options for manufacturers, far more than in any other standard we have previously adopted. For example, in order to reduce the risk of injury to various sizes of children, manufacturers may suppress the passenger air bag, either statically or dynamically, or assure that the air bag deploys in a benign manner. Likewise, manufacturers may use a benignly deploying air bag or a dynamic suppression system to reduce the risk of air bag injury to teenagers and small adult drivers. The existence of phase-ins provides manufacturers with additional options. While they must meet the applicable advanced air bag requirements for a specified percentage of vehicles during each phase-in, they have the option of certifying additional vehicles to those requirements in order to earn credits that can be applied to the percentages that need to be achieved in later years. Moreover, until September 1, 2006 (the end of the first phase-in), manufacturers may choose to certify compliance for at least a portion of their fleet with one of three different unbelted high-speed test requirements: the sled test of S13,[30] the long-standing 48 km/h (30 mph) unbelted rigid barrier test of S5.1.2(a), or the 40 km/h (25 mph) rigid barrier test of S5.1.2(b). Each of these three options has different injury criteria.

We have provided manufacturers with myriad options to allow and encourage them to develop and implement technologically innovative advanced air bag systems. However, this does not mean that we believe that each option provides exactly the same safety benefits. Rather, we believe that the standard as a whole, including its requirement of an irrevocable choice among

[30] The text of S13 has been slightly revised to indicate which set of injury criteria must be met.

compliance options, strikes the proper balance between assuring an appropriate level of safety and allowing an appropriate degree of manufacturer flexibility.

We have found that when some manufacturers are confronted with a compliance test failure indicating an apparent noncompliance with the option that they originally chose at the time they certified the vehicle, they have responded by asserting that their product complies with a different option. As explained in our earlier denial of reconsideration on this subject, such shifting in the asserted basis for compliance creates obvious difficulties for us, both in managing our resources available for compliance testing and in ultimately assessing a vehicle or equipment's compliance. We believe that a system that allows us to effectively allocate our scarce enforcement resources to ensure that our safety standards are being met clearly meets the overall need for motor vehicle safety.

In addition to preventing the unnecessary expenditure of resources, we also believe it is important for manufacturers to honor their certification commitments. The Safety Act does not allow for "recertification" after the certification label has been applied. Nor does it contemplate allowing manufacturers "two bites at the apple." Moreover, there is ample evidence that consumers often choose to purchase a particular vehicle because its manufacturer has advertised that it has certain safety features. In light of consumer interest in and concerns about air bag safety, this consumer practice is likely to continue or even increase in the context of this rule. We believe that consumers should be entitled to expect that manufacturers will produce vehicles that comply with the requirements to which they are certified.

We note that a manufacturer that chooses to install multiple safety features that would independently comply with two or more of the specified compliance options in the standard is

not prohibited from doing so. For example, a manufacturer may build a vehicle that meets both the static suppression and the low risk deployment requirements of today's rule. In such a case, it may be that a failure to comply with the option to which the vehicle was certified would be inconsequential to motor vehicle safety, such that a notification and remedy (i.e., recall) campaign would not be necessary. However, in view of the fact that not all compliance options provide precisely the same level of safety benefits, such an inconsequentiality determination would not be automatic.

Although it is implicit from the foregoing discussion, we want to explicitly note that S4.8 applies to the decision by a manufacturer as to whether to certify a vehicle as complying with the advanced air bag requirements during each of the two phase-ins. If a manufacturer advises NHTSA (either in response to a request for compliance information or in a report submitted pursuant to 49 CFR Part 585) that it intends a particular vehicle or model to count as meeting the requirements of S14.1, S14.2, S14.3, or S14.4 during the applicable phase-in, a vehicle that failed to comply with the applicable performance requirements would be deemed to be in noncompliance with the standard, even if other vehicles produced by the manufacturer in the production year in question would have been sufficient to satisfy the specified percentage requirement for that year.

We believe that such a regulatory approach is particularly critical in the context of this rule, since consumers will know whether a vehicle is represented as complying with the advanced air bag requirements from a variety of sources (e.g., the warning label in the vehicle, the owner's manual, manufacturer advertising, dealer sales staff, etc.) and may modify their behavior in reliance upon that representation (e.g., by allowing the smallest child to sit in the

front seat to suppress the air bag). If in fact the vehicle does not provide the promised performance (e.g., the suppression system does not function properly), the manufacturer would be required to notify NHTSA of the noncompliance and, unless the noncompliance were found to be inconsequential to motor vehicle safety, to remedy the problem.

E. Credits for Early Compliance

To encourage early compliance with the advanced air bag final rule, we were directed by TEA 21 to include means by which manufacturers may earn credits toward future compliance. Credits, on a one-vehicle for one-vehicle basis, may be earned for vehicles that are certified as being in full compliance with the final rule before the beginning of each of the applicable phase-in periods. They may also be earned during the phase-ins if a manufacturer's production of complying vehicles for a model year exceeds the percentage of vehicles required to comply in that year. We are amending 49 CFR Part 585 to specify reporting requirements that will allow us to administer this provision, Credits for the first phase-in may be earned immediately after this final rule becomes effective, but credits for the second phase-in may only be earned starting on September 1, 2006. We are only allowing credits to be earned for vehicles manufactured one year prior to the initiation of the second phase-in because we believe manufacturers should first direct their efforts towards full implementation of the first phase-in, particularly the risk reduction requirements. Consistent with the prior discussion of compliance options, a manufacturer's decision to certify a vehicle to the advanced air bag requirements before or during the phase-ins will be irrevocable, even if the manufacturer would have been able to satisfy the percentage requirements for a given model year with other vehicles in its fleet.

F. Choice Between Complying with Existing and/or New Injury Criteria

and Test Requirements

In the SNPRM, we addressed, for vehicles not certified as being in full compliance with the final rule, the relationship of the proposed new injury criteria and performance limits to the existing test requirements of Standard No. 208. We stated that while some of the new and/or modified injury criteria and performance limits would apply to existing tests that are being retained in Standard No. 208, we were not proposing to change the injury criteria and performance limits for vehicles not certified to all of the requirements applicable to vehicles with advanced air bags.

We stated that, as a general matter, vehicles produced between the time the final rule becomes effective and the time the phase-in is complete would be required to comply with and be certified to all the current requirements and current injury criteria or to all the requirements for advanced air bags and new injury criteria; there would be no opportunity to mix and match.

However, as a possible exception to this, we requested comments on whether we should permit manufacturers to immediately certify their vehicles to whatever set of unbelted crash test requirements applicable to 50th percentile adult male dummies was adopted for the final rule, as an alternative to the currently available sled test or unbelted up-to-48 km/h (30 mph) rigid barrier test. In light of the limitations of the sled test, we stated that, to the extent vehicle manufacturers wished to immediately design and certify vehicles to whatever set of unbelted crash test requirements was included in the final rule, there could be safety benefits.

Several commenters, including AAM, DaimlerChrysler and Toyota, supported permitting manufacturers to begin immediately certifying to the new unbelted test in lieu of the sled test at the manufacturer's option, for vehicles without advanced air bags. In light of the comments and

the discussion we presented in the SNPRM, we are including this option in the final rule. We have also decided to retain a manufacturer's option to certify to the existing 48 km/h (30 mph) unbelted barrier test to September 1, 2006. This option will expire at the end of the phase-in because we believe that ultimately only a single set of injury criteria should apply to each test dummy.

G. Time Periods for Measuring Injury Criteria During Tests

In the SNPRM, we proposed specific points for the end of the period for measuring injury criteria in both crash tests and low-risk deployment tests, We noted that, for dynamic crash tests, we historically have not measured injury criteria more than 300 milliseconds after the vehicle impacts the barrier, and we proposed a 300 millisecond time duration for the dynamic crash tests. For the low risk deployment tests, which do not involve a complete vehicle crash and are intended only to address the potential adverse effects of an air bag, we proposed to measure injury criteria for up to 100 milliseconds after the air bag deploys.

We indicated that these time parameters would not apply to the dummy containment requirement. Regardless of the time frame used to measure other injury criteria, all dummies would continue to be required to remain fully contained within the test vehicle until both the vehicle and the dummies have ceased moving.

Comments were received from DaimlerChrysler, Toyota, Nissan, and Autoliv. Other than DaimlerChrysler, the commenters all supported truncating the test data at the point the dummy interacts with the vehicle interior and after the dummy's head had cleared the air bag. In the alternative, Nissan supported truncating the data in both the barrier tests and the low-risk deployment tests at 100ms. DaimlerChrysler, who commented only on the time-frame related to

low-risk deployment tests, noted that it was possible for peak injury criteria to be reached after 100 ms because of low output initiator delay times. Accordingly, it suggested that the data for all deployments be truncated at 300 ms or when the dummy ceases to be in contact with the air bag, whichever occurs first.

Traditionally, we have not counted data that is recorded as the result of the dummy's head neck or torso striking the vehicle interior when the dummy is no longer engaged in the air bag. We continue to believe, as apparently do commenters, that the air bag is neither responsible for these injury values nor could the air bag have prevented these interactions with the vehicle compartment. However, we are concerned that truncating the data to the point at which the occupant is no longer engaged in the air bag is insufficiently objective for compliance purposes. While we intend to retain our existing policy on considering the location of the dummy relative to the vehicle interior and the air bag at the time peak injury measurements are recorded, we have decided to keep the time parameters for measuring data at specific level. Accordingly, data will be collected until 300 ms after the vehicle strikes the barrier in a dynamic crash.

Based on DaimlerChrysler's observation and our knowledge of low risk deployment technologies, we agree that a 100 ms time-frame for the low risk deployment test may be too small. Consequently, the parameters for truncating data for the low risk deployment tests have been changed to the same parameters used for the barrier tests, i.e., 300 ms after the air bag deploys.

H. Cruise Controls

In the SNPRM, we proposed to require that cruise controls be deactivated when any stage of an air bag system is deployed, and included a brief procedure to test whether this requirement

was met. We noted that if the cruise control were not deactivated, it would continue to provide power to the vehicle, which could lead to a runaway condition.

Only Consumers Union supported our proposal, stating a deactivated cruise control is a basic safety measure. AAM and DaimlerChrysler stated that we had not demonstrated a safety need for such a requirement and the proposed test procedure could make cruise control systems less reliable than they are currently. According to AAM, none of its members is aware of a single report of a cruise control remaining operational after an air bag deployment following a crash. DaimlerChrysler also noted that under most crash conditions, the cruise control is usually already deactivated by the time the air bag deploys, either because the vehicle's speed has fallen below a certain threshold or because the brakes have been applied. Additionally, cruise control systems generally requires a certain level of speed to operate, making compliance testing exceptionally difficult.

We agree with AAM and DaimlerChrysler that there is no need to regulate cruise control interaction with air bags at this time. We also are unaware of any instances where the cruise control remained on after an air bag deployed. It appears that manufacturers have already resolved this potential scenario. Finally, the addition of a test procedure could add additional complexity and potential unreliability to an already complex system. Accordingly, while we believe that the cruise control should deactivate when an air bag deploys, we do not believe this is an area currently in need of regulation.

I. Rescue Operations

In the SNPRM, we proposed to require that all air bags become deactivated after a maximum one-minute "keep alive" period has elapsed after the vehicle battery power is

disconnected. We proposed a brief procedure to test whether this requirement was met. The purpose of this requirement was to ensure that rescue workers have a standardized method and time for deactivating air bags, to neutralize any potential danger they may face. We noted that the air bags in most vehicles are deactivated within a minute or less after battery power is disconnected.

Commenters generally supported the concept of having air bags automatically deactivate one to two minutes after a vehicle's battery power is shut off, although the NTSB argued that the deactivation time should be closer to ten seconds. AAM, Toyota, and DaimlerChrysler questioned the need for a requirement at all, since most manufacturers already deactivate the air bag within one to two minutes after the power is cut off. These commenters, along with AORC, Nissan, Delphi and TRW, all raised concerns over the proposed test procedure. Specifically, the commenters were concerned that the addition of an air bag tiring voltage terminal to measure voltage changes within the air bag electrical system may actually cause unknown air bag deployment problems adversely affecting the system's overall safety effectiveness.

We continue to believe that a short air bag deactivation time would eliminate confusion and unnecessary delays in rescue work. We also believe that a period of one minute or less is appropriate. It is sufficiently short to assist in rescue operations but not so brief as to create design problems for manufacturers. We are concerned, however, that any test procedure that would allow us to objectively measure when the air bag has been deactivated could cause unnecessary complexity in the air bag system and potentially reduce system reliability. As noted in the preamble and cited by commenters, the air bags in most vehicles are deactivated within one minute or less after battery power is disconnected. Since most vehicles already meet the

proposed timing, we are not convinced that there is a sufficient need to regulate this issue at this time.

However, we urge manufacturers who do not design their air bag systems to shut off within one minute of power being cut off to work on reducing the time before such deactivation. Given the ability of most manufacturers to meet this time frame in existing vehicles, we do not believe this would pose a significant design challenge. Rescue personnel do not have the time or the resources to determine at a crash scene when an undeployed air bag will deactivate once power is cut off. A measure of uniformity in this area is desirable.

J. Hybrid III Dummy Neck

In the SNPRM, we requested comments on two issues related to the Hybrid III dummy neck.

First, we noted that there have been crash test situations where the agency has observed high neck moments being generated at the upper load cell of the Hybrid III dummy neck within 20 milliseconds of the initiation of large neck shear loads without observing substantial angular deformation of the dummy neck. We stated that while we believe that these are true loads being generated by the restraint system and not artifacts of an inappropriately designed neck transducer, we were uncertain whether this loading condition is biomechanically realistic. We requested commenters' views on this issue.

Second, we sought comments on the appropriate channel frequency class (CFC) for evaluating data from neck load cells for injury assessment purposes and whether that CFC should depend on the impact environment (e.g., vehicle crash tests, out-of-position tests, etc.).

Several commenters noted that they did observe the high moment/low rotation loading

condition and one, DaimlerChrysler, offered test data to suggest that the dummy's neck design does not follow established biomechanical response corridors. However, none of the commenters, including DaimlerChrysler, provided the agency with any additional data to justify or develop alternative dummy neck response requirements that either verify the responses of the current Hybrid III design or provide the basis for improving it.

Because of the need to minimize the likelihood of neck injuries and lack of testing alternatives, we will use the current Hybrid III neck designs in the final rule. However, we will immediately establish new and accelerate existing research and development efforts to further address this issue.

As to filtering, AAM and DaimlerChrysler stated that they believe that the filters specified by SAE J211 are appropriate for evaluating neck injury and that sources of the spikes/noise need to be identified and eliminated.

We agree with the commenters' suggestion that the SAE filter specifications for the individual neck loads are sufficient for evaluating neck injury potential. The sources of noise do not appear to be inherent in the dummy neck design, but rather are caused by incorrect assembly/maintenance of a specific dummy or by procedural variances which need to be corrected at the testing laboratories.

However, because Nij combines the neck bending moment and the neck axial force which have different channel frequency classes (CFC 600 for moment, CFC 1000 for axial force), we believe it is more appropriate to have a pure channel class frequency of 600 for Nij. Thus, we are specifying that a CFC 600 be used for computing the axial force component of Nij, and CFC 1000 for computing the peak axial neck forces. Because J211 does not require phaseless filters

for frequency channel classes above 200, we have specified that all measurements be conducted with phaseless filters.

K. Seating Procedure for 5th Percentile Adult Female Dummy

Earlier in this notice, we discussed the issue of where the 5th percentile adult female dummy should be located during crash tests; i.e., with the seat full forward or in some other position. A related issue is what seating procedure to use for positioning that dummy.

In the SNPRM, we proposed a seating procedure that was developed considering the work performed by the SAE Hybrid III 5th Seating Procedure Task Group and by NHTSA's Vehicle Research and Test Center (VRTC). The 50th percentile Hybrid III adult male dummy is the only dummy currently used for Standard No. 208 compliance crash testing. For that testing, the dummy is positioned according to S10 of the standard. As part of that procedure, the H-point of the dummy is located using the manikin and procedures in SAE Standard J826.

For the 5th percentile adult female dummy, we proposed a different seating procedure which does not use a manikin, In tests we conducted for positioning the 5th percentile adult female dummy, it made little difference whether a manikin was used or not. The proposed non-manikin procedure also made it easier to repeatedly position the 5th percentile adult female dummy.

We are adopting the seating procedure we proposed in the SNPRM. Although we have reviewed the proposed SAE seating procedure for the 5th percentile adult female in a dynamic crash test, we have decided against adopting this procedure because it has not yet been adopted by the SAE and may not be adopted, in any form, for some time. If the SAE does ultimately adopt a seating procedure that is different from the one we are adopting today, we will review

that procedure and consider replacing our procedure.

L. Deletion of Tests Between the Initial and Supplemental Proposals

Several commenters raised concerns about the deletion of several tests in the SNPRM that were proposed in the NPRM.

Public Citizen, CAS and the American Academy of Pediatrics (AAP) expressed concern about deletion of rough road tests. AAP stated that the agency's rationale that this is an area that vehicle manufacturers will consider and address in the absence of Federal requirements could be used to justify elimination of all test requirements. AAP stated it does not think it is appropriate to eliminate safety tests related to obvious potential performance problems, particularly in cases where the consequences of performance failure could easily be the death of infants, children and adolescents.

Commenters also raised concerns about deletion of the proposed vehicle integrity requirements and the option for a full scale dynamic out-of-position test,

We note that we dropped each of these requirements in part because of problems with the proposed test procedures. A specific explanation for dropping each of the requirements is set forth in the SNPRM.

While rough road performance is certainly important, we do not believe there is any evidence that this is likely to be a real world problem. It would also be difficult to develop a test procedure that would assure that a dummy responded like a human to the forces imparted by a rough road. Indeed, the procedure we had proposed in the NPRM turned out to be impractical and did not accomplish its objective. Given our limited resources, we do not believe there is a need at this time to develop test procedures in this area.

As to the option for a full scale dynamic out-of-position test, we believe that other options included in today's final rule accommodate the various advanced air bag technologies under development.

While vehicle integrity is important, this is an area that is not directly related to advanced air bags, and we believe it is best addressed outside of that context.

M. Consideration of Unintended Consequences

Some commenters raised concerns about the possibility of unintended consequences resulting from use of advanced air bag technologies.

In a joint comment, CEI/CA stated that they were concerned that we had not required extensive real world testing of the complex air bag systems that would be necessary to meet an advanced air bag standard. Those organizations argued that the absence of such data at the time of the original air bag mandate unexpectedly resulted in scores of air bag-induced deaths to children and other occupants.

CEI/CA also expressed concern that there have been large numbers of air bag-related recalls to remedy problems that testing alone failed to anticipate, such as weather-induced deterioration, and production and technological problems. They argued that the fact that these problems arose for the current generation of air bags indicates that the more complex systems envisioned by NHTSA will be even more prone to trouble.

CEI/CA argued that we should give consideration to the possibility of merely approving, rather than mandating, advanced air bags.

As noted above, CEI/CA argued also that NHTSA's existing air bag experience should lead it to reject any mandate requiring technology and designs that are still under development.

At a minimum, according to CEI/CA, the agency should establish requirements will not take effect until real-world data on such systems exists and has been analyzed. To the extent that it is statutorily constrained on this matter, it should set lead times at the absolute statutory maximum.

Congressman David M. McIntosh similarly expressed concern that this rulemaking is being conducted too quickly, without real world data on how advanced air bags operate. He characterized the original mandating of air bags as rushing into uncharted territory and said that before repeating that mistake, we should perform extensive real world trials on advanced air bags.

As noted earlier in this final rule, the history of this agency's consideration of air bags is actually a very long one, having begun with a public meeting in 1969. Air bags were not mandated until 1991, when Congress enacted a law mandating that NHTSA amend its occupant protection standard to require the installation of air bags, thus eliminating the option of installing other types of automatic restraint systems such as automatic belts. Between those two events, there were more than 20 years of public proceedings, research projects and analyses conducted by NHTSA on the issue of air bags, research conducted by the vehicle manufacturers, the installation of air bags in 10s of 1,000s of vehicles, and the announcement by vehicle manufacturers of plans for installing them in many more.

To solve the problems that arose in the mid-1990s with many of the air bags installed in motor vehicles, the agency announced a comprehensive plan in November 1996. The plan set forth an array of immediate, interim and long term measures. The immediate and interim measures focused on behavioral changes and relatively modest technological changes. The long term measures focused on more significant technological changes, i.e., advanced air bag

technologies. The immediate steps included urging parents to place their children in the rear seat and giving motorists at risk the chance to turn off their air bags, requiring new labels with eye-catching graphics and colors and strong, clear warning messages, permitting the installation of original equipment on-off switches in new vehicles in which young children could not be placed in a child restraint system in a rear seating position, and permitting the installation of retrofit on-off switches to protect people in at-risk groups. Because of the lead time needed for advanced air bag technologies, NHTSA adopted an interim measure to accelerate manufacturer efforts to depower their air bags and make other short term design changes. The agency did this by permitting manufacturers to certify their vehicles using a sled test instead of a crash test more closely simulating a real world crash. In the long term, the agency said that it would conduct rulemaking to require the installation of advanced air bags.

Since 1996, the agency has been carefully laying the groundwork for completing the implementation of its comprehensive plan by issuing this final rule. As noted above, we have made extensive efforts to gather information and solicit public comments that would help us identify and select a sensible, effective array of requirements for increasing protection and minimizing risk. In February 1997, we held a public technical workshop on advanced air bag technologies. In December 1997, we sent an Information Request (IR) to the vehicle manufacturers to obtain detailed information concerning their changes in air bag design during the 1990s. In April 1998, Jet Propulsion Laboratories completed, at NHTSA's request, a report titled "Advanced Air Bag Technology Assessment." In mid-1998, Congress made the judgment that advanced air bags should be required. It enacted TEA 21 mandating that we amend our occupant protection standard again, this time to require vehicle manufacturers to improve the

protection provided by air bags and to reduce the risks associated with them by means that include advanced air bag technologies. Although TEA 21 required only that we seek public comment once on our proposals before taking final action, we asked for public comment twice. We issued a notice of proposed rulemaking (NPRM) in September 1998, and a supplemental notice of proposed rulemaking (SNPRM) in November 1999. To help us thoroughly explore the issues, we proposed or discussed a variety of alternatives and posed a wide-ranging array of questions.

Further, before we decided on what to include in this final rule, we carefully considered the available information and the public comments, the underlying safety problems, the performance of current motor vehicles, the ability (including lead time needs) of vehicle manufacturers to achieve better performance in future motor vehicles, the air bag technology (including advanced air bag technology) currently available or being developed, the cost of compliance, and other factors. We also carefully considered the comments concerning the costs, benefits and risks associated with each alternative proposal.

As required by the mandate to us in TEA 21, our final rule requires vehicle manufacturers to improve the protection provided by air bags and reduce the risks associated with air bags by means that include advanced air bag technologies. Thus, the final rule is very different from the one issued in 1984. That final rule mentioned advanced air bag technologies as a way of addressing concerns about air bags risks, but did not mandate their use to prevent unintended consequences. This final rule mandates their use.

This final rule does not, however, mandate the use of particular advanced air bag technologies. The requirements in the final rule are performance-based requirements that give

vehicle manufacturers the flexibility they requested to choose which type of advanced air bag technology they include in the vehicles.

This final rule establishes requirements and procedures for testing the ability of advanced air bag systems to protect people in moderate to high speed crashes and to avoid creating risks in low speed crashes. There are new detailed test procedures for manufacturers to use in developing and testing their advanced passenger air bag systems to ensure that they either do not deploy at all in the presence of a young child or deploy in a low risk manner. Driver air bags are required to deploy in a low risk manner.

The final rule contains additional complementary measures for reducing the likelihood of unintended consequences for front seat occupants. It retains the existing, strongly worded and brightly colored warning labels urging motorists to place children in the back seat and urging everyone to buckle up. We recognize that some motorists will nevertheless place a child in the front seat. Our final rule requires that if vehicle is equipped with a passenger air bag system that turns the air bag off in the presence of a young child, the vehicle must also have a telltale to inform motorists whether the air bag has been turned off. Further, we have extended the availability of OE air bag switches in vehicles in which child restraints cannot be placed in a rear seat and of retrofit switches for at-risk people.

Finally, we have provided as much lead time as TEA 21 allows for vehicle manufacturers to comply with the advanced air bag requirements mandated by that law.

N. Reporting Requirements

Also as with previous phase-ins, we proposed amendments to 49 CFR Part 585 to establish reporting requirements to allow us to administer the phase-in and the use of advanced

credits. We received no comments on this proposal and have adopted the changes to Part 585, with several modifications to clarify the requirements and to account for the addition of a second phase-in.

O. Use of Children and Adults for Testing Static Suppression Systems

In the SNPRM we proposed to permit manufacturers to use human beings to check suppression features in light of concerns that current dummies may not be sufficiently human-like to be recognized by some of the advanced technologies under development. If a manufacturer selected this option, the suppression requirements would need to be met at each of the relevant positions for any human being within a specified weight/height range for 3-year-old and 6-year-old children, and the air bag system could not be suppressed when the seat was occupied by a female within a height/weight range similar to that of a 5th percentile adult female.

In the SNPRM, we emphasized that these tests simply involve a child or adult assuming specified positions in the vehicle, with a technician checking (typically by looking at a light) whether the air bag system would be activated or deactivated; these tests do not involve deploying the air bag or moving the vehicle. To ensure absolute safety, we proposed to require manufacturers selecting this option to provide a method to assure that the air bag would not deploy during testing; such assurance could be made by removal of the air bag.

In general, commenters supported the use of humans under the conditions outlined in the SNPRM at least as a short-term measure. Manufacturers were generally concerned that the use of humans would present objectivity and reliability concerns. All of the manufacturers of vehicles and air bag systems who commented on this option addressed the industry efforts to develop a new test dummy that better replicates the human form than the current

anthropomorphic test dummies. AORC, Consumers Union and AAP urged that the air bags be removed during tests with humans, arguing that removal is the only sure way to eliminate risk. GM and BMW were concerned that systems designed to recognize humans might not recognize the anthropomorphic test dummies in the vehicle crash tests.

GM and IEE stated that the ranges of weight and size provided in the SNPRM should be tightened, claiming the given range would create too much variability for a system to accurately detect presence with sufficient reliability. At the same time, the NTSB, AAP, and Trauma Link at the Philadelphia Children's Hospital have suggested that we further expand the height and weight ranges specified in the SNPRM.

We support the initiative industry has taken in developing a new, more human-like dummy. The prototype for a 5th percentile adult female dummy has already been developed by FTSS with support from various vehicle manufacturers. Based on presentations made to the agency, we believe a prototype for the 6-year-old child dummy will soon follow. Since we have not yet had an opportunity to study these new dummies, we are unable to comment on their suitability for suppression technologies. However, we can note that the dummies currently used in compliance tests were all designed for use in crash tests, and while their overall size and weight is representative of the humans they were designed to replicate, they do not demonstrate the same flexibility, muscle tone or weight distribution as humans. Once the new dummies have been fully developed, we will evaluate their suitability for testing suppression systems. It is our hope that we will soon be able to eliminate the use of humans as a compliance option for suppression systems.

As long as humans can be used to meet the suppression test criteria, it is imperative that

the risk to these individuals be eliminated. This may require manufacturers to physically remove the air bag. However, manufacturers may be able to eliminate risk without removing the air bags. If they can do this, we see no need to require that the air bags be removed.

As for GM's and BMW's concerns that systems designed to recognize humans may not recognize dummies for crash tests, we note that we believe vehicles should be designed to protect people rather than test dummies. However, in order to meaningfully test for compliance to our standard, the air bag must fire in a crash test. Accordingly, manufacturers will need to design their systems in such a way that they can meet the crash test requirements with dummies located in the front seats.

In order to accommodate designs geared to recognition of people rather than inanimate objects, we have provided in S4.12 that manufacturers of vehicles with human recognition systems must provide NHTSA with information and equipment necessary to circumvent the suppression system for vehicle crash tests.

We have decided to keep the height and weight ranges proposed in the SNPRM. As noted above, the use of humans is intended as a temporary measure and will likely only be used until more human-like dummies can be developed. Accordingly, we believe it would be inappropriate to expand the height and weight ranges significantly beyond the height and weight of the applicable dummies. At the same time, we have decided against narrowing the height and weight ranges proposed in the SNPRM. Since suppression systems will ultimately have to work with people, a system that can only detect the presence of an individual within a tightly prescribed range would not perform adequately in the real world.

P. Small Business Concerns

As discussed later in the *Regulatory Flexibility Analysis* section, the requirements contained in this final rule may have a significant impact on a number of small businesses, including small volume manufacturers, multi-stage manufacturers, alterers, seating system suppliers, air bag sensor and component manufacturers, and dummy manufacturers. Because today's rule will increase the demand for advanced air bag system technology as well as dummies and dummy parts (e.g., accelerometers), we believe that today's rule will have a positive effect on the manufacturers of these products. We expect that today's rule will have a more significant impact on small volume manufacturers, multi-stage manufacturers, alterers, and seating system suppliers.

In the preliminary regulatory flexibility analysis accompanying the SNPRM, we estimated that the final rule would affect approximately 11 seating systems suppliers which are small businesses. We explained that these suppliers serve a niche market and estimated that they provide seats for less than two percent of the vehicles. We explained that depending on the technology chosen to meet the proposed advanced air bag rule, these suppliers would need to keep up with emerging technology.

Bornemann Products Incorporated, a seating component manufacturer, stated that 98 percent of its sales are to multi-stage vehicle manufacturers who primarily manufacture individual, custom vehicles. Bornemann stated that this rule could completely eliminate the "niche" market of individual custom vehicles. Bornemann stated that since original vehicle manufacturers will be reluctant to allow any changes to their chassis that could affect the air bag system, this rule would have a significant impact on seating system vendors and their suppliers (e.g., fabric and trim suppliers, polyurethane producers, etc.), multi-stage vehicle manufacturers,

vendors who supply these manufacturers with items such as carpet, steel and wood, and their employees.

Bornemann stated that NHTSA's estimate of 11 seating companies was incorrect, that the number is closer to 30 and that these 30 businesses have close to $80,000,000 in sales and employ around 2,500 people. Bornemann also estimated that the rule would have an impact on the following small businesses: direct seating system vendors (130 firms and around 5,000 employees); multi-stage manufacturers (around 250 with approximately 14,000 employees); and vendors who supply material for vehicles and seats (around 550 vendors and around 18,000 employees). Bornemann also stated that a temporary exemption from the rule would not lead to a permanent resolution of the problem due to the technical issues involved. Bornemann did not explain what those technical issues were nor did they explain to what extent they could not be addressed. Bornemann also did not discuss what specific differences between existing and future air bag requirements would create technical problems for them nor did they discuss what specific advanced air bag technologies would pose the greatest problems for them.

The Coalition of Small Volume Automobile Manufacturers (COSVAM), RVIA, and NTEA addressed the potential impact the new advanced air bag requirements would have on small volume manufacturers, multi-stage manufacturers, and alterers. A discussion of their specific comments as well as our response to them is included earlier in the section addressing the rule's phase-in requirements.

We appreciate the technical challenges small volume manufacturers, multi-stage manufacturers, alterers, and seating system suppliers will face as a result of the requirements included in today's rule. Therefore, we have considered whether there were any alternatives

available that could simplify compliance for small businesses without adversely affecting safety.

RVIA asked that we allow small volume final stage manufacturers and alterers to certify compliance with a generic sled test pulse. As explained earlier in today's rule as well as in both the NPRM and SNPRM, we do not consider sled testing to be an adequate long-term means of assessing the extent of occupant protection that a vehicle and its air bag will provide occupants in the real world. Unlike a full scale vehicle crash test, a sled test does not, and cannot, measure the actual protection that an occupant will receive in a crash. The test can measure the limited performance attributes of the air bag, but not the performance provided by the full air bag system, much less the combination of the vehicle and its occupant crash protection system. It is that combination that determines the amount of protection actually received in a crash. We also note that it would be inconsistent with the Safety Act to allow multi-stage manufacturers and alterers to certify compliance with a generic sled test pulse. Under the Safety Act, we cannot base the applicability of our safety standards on the circumstances of the manufacturer, such as whether a vehicle is manufactured in one or more stages. Differences in the applicability of standards must be based instead on differences between vehicles, such as the differences between convertibles and sedans.

We note that sled testing is an accepted engineering practice and nothing precludes manufacturers from using sled tests as a basis for their certification. We note, however, that sled testing does not test all of the attributes (such as weight sensing or presence sensing) of the countermeasures that may be used to comply with the requirements of today's rule.

In light of the statutory mandates contained in TEA 21, the only alternative available to address the concerns of small businesses is to increase the lead time for small volume

manufacturers, multi-stage manufacturers, and alterers. We note that COSVAM, RVIA, and NTEA all supported such an extension. Further, while we recognize and are sympathetic to the technical challenges small volume manufacturers, multi-stage manufacturers, and alterers will face as a result of the requirements included in today's rule, we emphasize that we have limited discretion as to how much lead time we can provide. TEA 21 provides that if the phase-in begins on September 1, 2003, the final rule must become fully effective by September 1, 2006. No exceptions are given for multi-stage manufacturers, alterers, or small volume manufacturers.

We acknowledge that there is no guarantee that this solution will ultimately solve all the technical problems of small businesses. We have no control over when manufacturers bring into compliance the vehicles they supply to multi-stage manufacturers during the phase-in period. In addition, we have no control over the particular advanced air bag technology vehicle manufacturers will use to comply with the new requirements (e.g., whether the system will incorporate the seat).

Further, while we recognize that adapting to this technology may not be easy, it is necessary. Keeping pace with technology is not a new problem for these manufacturers. Manufacturers regularly incorporate new technology that improves the safety of their vehicles (e.g., antilock brakes). However, to help minimize the economic impact of this final rule on small businesses, we urge air bag suppliers, chassis manufacturers, and OEMs to provide these manufacturers with as much engineering expertise as possible to help them meet the new requirements, and to keep the overall impacts small.

We note that we are undertaking efforts to address the needs of multi-stage manufacturers, alterers, and the businesses, such as Bornemann, that supply them. We have

established a Negotiated Rulemaking Committee to develop recommended amendments to the existing NHTSA regulations (49 CFR Parts 567 and 568) governing the certification of vehicles built in two or more stages to the Federal motor vehicle safety standards. The purpose of the amendments would be to assign certification responsibilities more equitably among the various participants in the multi-stage vehicle manufacturing process. The Committee will develop its recommendations through a negotiation process. It consists of persons who represent the interests that would be affected by any such amendments, such as first-stage, intermediate and final-stage manufacturers of motor vehicles, equipment manufacturers, vehicle converters, testing facilities, trade associations that represent various manufacturing groups, and consumers. The Committee is addressing several issues that should, when resolved, assist multi-stage manufacturers and alterers in complying with today's requirements. Such issues include, for example: the feasibility and cost effectiveness of alternate methods (e.g., testing, computer modeling, or other as-yet-unspecified methods) to ensure compliance of completed vehicles with requirements of applicable FMVSSs; mechanisms for incorporating alternate methods of ensuring compliance into these regulations; mechanisms for sharing costs of testing; and requirements tailored to the capabilities and circumstances of each class of vehicles.

Q. Other Issues

1. Ability to Comment Effectively on the Supplemental Proposal

The Center for Auto Safety (CAS) has asserted in section I of its unpaginated, electronically-tiled December 30, 1999 comments that the agency has engaged in an "information blackout" that has hampered the ability of CAS and others to understand and comment effectively on the SNPRM. In support of this assertion, CAS has cited both NHTSA's

refusal to disclose materials submitted with claims of confidentiality by the motor vehicle manufacturers in response to the agency's December 17, 1997 requests for information concerning air bag technology in MY 1990-1998 light passenger vehicles (information requests)[31] and alleged inadequacies in the agency's October 26, 1999 report summarizing those materials. Air Baa Technology in Light Passenger Vehicles (R&D Report)."

NHTSA disagrees with CAS' general assertion that public commenters lack sufficient information to participate adequately in this rulemaking. The R&D Report is a lengthy document, consisting of a four-page Executive Summary, 37 pages of text and five appendices, that incorporates six tables and 3 1 figures. It describes and analyzes in some detail, but in general terms that do not disclose the identities of manufacturers or vehicle makes/models, the technology (Section 2.0) and trends (Section 3.0) in air bag technology during the 1990s. In addition, the R&D Report describes out-of-position testing conducted by NHTSA on MY 1996, 1998, and 1999 production vehicles (Section 4.1) and rigid barrier testing of 13 MY 1998 and 1999 vehicles with redesigned air bags (Section 4.2), and discusses evolving air bag fatality trends using data from NHTSA's Special Crash Investigations (SCI) program (Section 5.0). The agency's conclusion that the R&D Report provides commenters with ample information on which to base their comments is borne out by the specificity and sophistication of the comments

---

[31] The withheld information is currently the subject of litigation between CAS (represented by Public Citizen Litigation Group) and NHTSA. All of the vehicle manufacturers that received and responded to the information requests, as well as several air bag suppliers, have intervened as defendants. CAS v. NHTSA, D.D.C., No. 99-1759 (GK). The district court issued a decision denying the CAS' motion for summary judgement and granting NHTSA's and the intervenors' cross-motion for summary judgement on February 28, 2000.

[32] On December 16, 1999, the agency published a revised version of the R&D Report (Revision I) that contains minor technical corrections to the October 26, 1999 Report Revision 1 has been docketed at NHTSA-1997-2814-62.

submitted by CAS.

NHTSA also disagrees with CAS' more specific assertion that the absence of a discussion of air bag deployment thresholds in the R&D Report has inhibited comments on the SNPRM (CAS Comment, Section IA). Neither the SNPRM nor the NPRM on advanced air bags proposed to set a minimum deployment threshold limit. Furthermore, we did not receive information indicating that the vehicle manufacturers changed their deployment thresholds in response to the agency's March, 1997 sled test rule. Thus, commenters do not require specific information about deployment thresholds in order to present arguments in response to the SNPRM, and the deployment threshold issue is not directly relevant to this rulemaking action. Moreover, assuming that commenters wish to discuss deployment thresholds, data on this subject are readily available to commenters from other accessible sources. Data from NHTSA's National Accident Sampling System (NASS) that provides information about the "delta Vs" in actual crashes in which air bags have deployed is publicly available over NHTSA's Website and is widely used. In addition, information in publicly-available reports prepared by SCI provides delta-V information for crashes that have resulted in fatalities. These reports are publicly available and CAS has discussed these materials with specificity in Section IA and Attachment A of its comments.

CAS' charges in sections IB and IC of its comments with respect to alleged absence from the R&D Report of detailed air bag design information, such as information with respect to the location and mounting of air bags, folding pattern details, and information about inflation stages is similarly flawed. Because NHTSA's standards are performance standards rather than design standards, the agency has not proposed specific designs in either the NPRM or SNPRM. Thus,

air bag design information at the level of detail desired by CAS is not necessary in order to comment intelligently on the SNPRM. Moreover, contrary to CAS' description, the R&D Report does contain considerable design information. See, e.g., section 3.1 (Trend Analysis) and Appendix A, which includes 45 pages of detailed charts and graphs.

CAS also has objected to the withholding of the manufacturers' crash test performance data (other than data concerning testing performed pursuant to the requirements of Standard No. 208). Again, this data has been subject to litigation between CAS and the agency. But, in the R&D Report, at section 4 and Appendix D, NHTSA has provided the public with data from agency testing on a variety of vehicles using 5th percentile adult female dummies. CAS is obviously aware of these data; it has cited and discussed them in its comments.

2. Resubmittal of Petition for Rulemaking by Donald Friedman and Carl Nash

In a joint comment, Carl Nash and Donald Friedman stated that they believe that attempting to regulate all aspects of air bags may be counterproductive. They also argued that setting a minimum threshold of approximately 29 km/h (18 mph) and prohibiting late deployments would most protect vehicle occupants. We did not propose to set a minimum threshold as part of this rulemaking. Accordingly, adding such a requirement to the final rule would be outside of the scope of the rulemaking. However, we are requiring that manufacturers meet a low risk deployment test for drivers and for small children if the air bag does not suppress. We believe that these requirements will adequately protect most individuals who could be seriously injured or killed with current air bags. Likewise, we are requiring manufacturers to meet the applicable injury criteria in a 40 km/h (25 mph) offset deformable barrier crash test. As

explained earlier in this document, that test is designed to prevent the late deployments to which Friedman and Nash object.

In the SNPRM, we denied a petition by Mr. Friedman and Mr. Nash that would have required manufacturers to develop systems that would further encourage vehicle occupants to use their safety belts. In denying the petition, the agency stated that it does not have the legal authority to require such technology, although we are not discouraging manufacturers from voluntarily using such technology. The basis for our rationale is an amendment made to the Motor Vehicle Safety Act in 1974 after NHTSA had amended its occupant protection standard to require vehicle manufacturers of vehicles equipped with manual seat belts, instead of automatic protection, to install inducements for belt use. These inducements were either interlocks that prevented one from driving the vehicle unless the safety belt was used or buzzers that sounded continuously until the safety belts were attached.

Friedman and Nash have resubmitted their petition in response to the SNPRM. As noted in the SNPRM, we do not believe we currently have the statutory authority to require such devices. Nor do we believe that requiring any device that is not a buzzer or an interlock is within our authority, given the 1974 amendment. Accordingly, we are denying their resubmission. Nevertheless, we agree with Mr. Friedman and Mr. Nash that in the twenty-five years since that amendment was enacted, patterns of safety belt usage have changed considerably. We are planning to monitor the level of public acceptance and effectiveness of systems that manufacturers are placing in their vehicles to encourage seat belt use. If it appears that these systems are working, it may be appropriate to seek to have the 1974 amendment either changed or repealed.

XIV. Benefits and Costs

The Final Economic Assessment (FEA) provides analyses of the safety benefits from tests that reduce the risk of injury from air bags in low-speed crashes, as well as from tests that improve the overall effectiveness of air bags in high speed crashes, The intent of this rulemaking is to minimize risks caused by air bags to out-of-position occupants, especially infants and children, and to improve occupant protection provided by air bags for belted and unbelted occupants of all sizes. To achieve these goals, we are requiring vehicles to meet test procedures that broaden the scope of the current standard to ensure that occupants are properly protected under a wider variety of crash circumstances.

The risk of injury from air bags arises when occupants are too close to the air bag when it inflates. Generally, those most at risk from injury are infants, young children, and out-of-position drivers. We estimate that in a fleet fully equipped with pre-model year (MY) 1998 air bags, there would be 46 drivers, 18 infants, 105 children, and 18 adult passengers at risk of being killed by air bags annually because they were out of position when the air bag deployed in low speed (< 25mph delta-v) crashes. We also estimate that if all vehicles had air bags, 38 drivers, 9 infants, 200 children, and 15 adult passengers would sustain serious to critical (MAIS 3-5) nonfatal injury because they were out of position in low severity crashes. A variety of technologies could be used to prevent these deaths and serious injuries, including weight or presence sensors to suppress the air bag, multi-stage inflators, and low risk deployment air bags.

To address these concerns, the new suppression and low risk deployment tests employ crash dummies representing infants, 3-year- old children, 6-year-old children, and 5th percentile female drivers. These tests generally require either that the air bag be suppressed if certain risk

conditions exist or that deployments occur at levels that produce a low probability of injury risk.

Of the 187 potential at-risk fatalities, NHTSA estimates that suppression technologies could prevent up to 93 fatalities, low-risk air bags could prevent up to 154 fatalities, and multi-stage inflation systems could prevent up to 179 fatalities when combined with weight sensors used to suppress the air bag. Thus, more than 95 percent of the at-risk population in low speed deployments could be protected by technologies used to meet the test requirements. Of the 262 serious but nonfatal injuries, suppression technologies could prevent 151 injuries, low-risk air bags could prevent 191 injuries, and multi-stage inflation systems could prevent up to 252 injuries when combined with a weight sensor.

There is some question about the reliability of suppression and low risk deployment countermeasures and further development of these countermeasures is necessary. To the extent that these systems are not as reliable as assumed, children and small adults would continue to be at risk. Even if suppression and low risk deployment technologies are completely reliable, there will remain some out-of-position individuals subject to the full force of the air bag under certain circumstances. The risks to out-of-position individuals could be greater with an air bag designed to provide a 48 km/h (30 mph) unbelted performance compared to an air bag designed to provide 40 km/h (25 mph) unbelted performance.

The FEA also analyzes three alternative sets of high speed tests instituted to preserve and enhance air bag protection. Each test includes belted and unbelted frontal rigid barrier tests using 5th percentile adult female and 50th percentile adult male crash dummies, 30 degree oblique tests into a rigid barrier using unbelted 50th percentile adult male dummies, and 40 percent offset frontal deformable barrier tests using 5th percentile adult female dummies. Alternative 1 would

require an unbelted 32 to 40 km/h (20 to 25 mph) frontal rigid barrier test, while Alternative 2 would require an unbelted 32 to 48 km/h (20 to 30 mph) frontal rigid barrier test. Both alternatives would require a belted 0 to 48 km/h (0 to 30 mph) frontal rigid barrier test. Alternative 3 would require an unbelted 32 to 40 km/h (20 to 25 mph) frontal rigid barrier test, but would require a belted 0 to 56 km/h (0 to 35 mph) frontal rigid barrier test for the 50th percentile adult male dummies and a belted 0 to 48 km/h (0 to 30 mph) frontal rigid barrier test for the 5th percentile adult female dummies. Chapter I of the FEA provides the detail of the alternative sets of high speed tests.

A variety of technologies could be used to comply with these tests including modified air bag fold patterns, improved inflators, added sensors, multi-stage inflators, and pretensioners. Air bag systems designed to comply with the 40 km/h (25 mph) offset test would, over the lifetime of one model year's production, save 20-28 more lives and prevent 134-262 more nonfatal injuries than the pre-MY 1998 baseline vehicles. Systems designed to the 48 km/h (30 mph) tests with the 5th percentile female dummy would save 23 more lives (4 belted and 19 unbelted) and prevent 184 more nonfatal injuries (43 belted and 141 unbelted). Systems that meet the 56 km/h (35 mph) rigid barrier test with the belted 50th percentile male dummies would save from 0-4 more lives and prevent 256 to 486 more nonfatal injuries.

Estimates of the relative impact of the unbelted high speed tests are subject to a degree of uncertainty for several reasons, not the least of which is the fact that no vehicles were ever subject to a 40 km/h (25 mph) unbelted standard. We cannot estimate the most likely difference between setting the unbelted tests at the two different levels, because it depends on how the manufacturers would meet the alternative performance requirements.

We have discussed in detail our reasons for believing that it is unlikely that vehicle manufacturers will significantly depower their air bags compared to the MY 1998-2000 fleet Vehicle manufacturers have not depowered their air bags so much that they minimally comply with the sled test. Crash tests and field experience to date with vehicles certified to the sled test have indicated that there has not been a loss of frontal crash protection compared to pre-MY 1998 vehicles. If, as we expect, the manufacturers keep the same level of power as they currently have in MY 1998-2000, even with a 40 km/h (25 mph) unbelted test requirement, then the difference in actual benefits between the two test speeds would be small or even eliminated.

At the same time, we cannot rule out the possibility that air bags will be significantly depowered. To account for this possibility, we calculated a "worst case" scenario comparing the benefits at the minimum performance requirements of each speed. We derived point estimates using two different methods and different sets of assumptions. We estimate that vehicles designed with 48 km/h (30 mph) air bags could provide 229 or 394 more lives saved than vehicles designed with minimally compliant 40 km/h (25 mph) air bags. However, we also estimate that 48 km/h (30 mph) air bags could result in an additional 1,345 serious injuries[33] compared to vehicles designed with 40 km/h (25 mph) air bags. These point estimates do not necessarily define the full range of possible outcomes due to uncertainty regarding both data and assumptions under each method.

---

[33] The less aggressive single-stage air bag that can be designed to a 40 km/h (25 mph) unbelted test can result in fewer air bag caused injuries at low speeds than an air bag designed to a 48 km/h (30 mph) unbelted test. Thus, single-stage air bags designed to a 48 km/h (30 mph) unbelted test can prevent more fatalities, while single-stage air bags designed to a 40 km/h (25 mph) unbelted test can prevent more injuries. Multi-stage air bags are assumed to provide the same level of benefits during the first stage, whether the second stage is designed for a 40 km/b (25 mph) unbelted test or a 48 km/h (30 mph) unbelted test.

Even assuming a worst case scenario, each of the three alternatives provide more potential benefits than the existing 48 km/h (30 mph) generic sled test. We estimate that the generic sled test is roughly equivalent to a 35 km/h (22 mph) rigid barrier perpendicular crash. During the 1997 rulemaking, we looked at the relative safety consequences of an air bag designed to just meet the performance requirements associated with a 48 km/h (30 mph) generic sled test. We estimated the fatality impacts of designing a vehicle to minimally meet the performance requirements imposed by the 48 km/h (30 mph) generic sled test and have compared these to the fatality impacts of designing a vehicle to just meet the 40 km/h (25 mph) unbelted rigid barrier test. Assuming there is no impact on air bag size, air bags designed to the 40 km/h (25 mph) unbelted rigid barrier test would save 64 to 144 more lives than air bags designed to the generic sled test. Assuming air bags designed to the generic sled test would be reduced in size and therefore provide no benefit in partial frontal impacts, 282 to 308 more lives could be saved by air bags designed to the 40 km/h (25 mph) unbelted rigid barrier test because that test requirement includes testing vehicles at a 30 degree oblique angle, thus providing benefits in partial frontal impacts.

Potential compliance costs for the final rule vary considerably and are dependent upon the method chosen by manufacturers to comply. Methods such as modified fold patterns and inflator adjustments can be accomplished for little or no cost. More sophisticated solutions such as proximity sensors can increase costs significantly. Dynamic presence sensors are not available at this point in time. They have not been refined to the point that they are in use in vehicles and are not required by tests in any Alternative. However, they have the potential to provide more benefits on the passenger side than weight sensors or low risk air bags. Dynamic

presence sensors could be used by manufacturers to meet the test requirements in the future. As such, the cost and benefits of these systems have been estimated. The range of potential costs for the compliance scenarios examined in this analysis is $2 I -$128 per vehicle (1997 dollars). This amounts to a total potential annual cost of up to $2 billion, based on 15.5 million vehicle sales per year.

Compliance methods that involve the use of suppression technology have the potential to produce significant property damage cost savings because they prevent air bags from deploying unnecessarily. This saves repair costs to replace the passenger side air bag, and frequently to replace windshields damaged by the air bag deployment. Property damage savings from these requirements could total up to $85 over the lifetime of an average vehicle. This amounts to a potential cost savings of $1.3 billion.

xv. Rulemaking Analyses and Notices

A. Executive Order 12866 and DOT Regulatory Policies and Procedures

NHTSA has considered the impact of this rulemaking action under Executive Order 12866 and the Department of Transportation's regulatory policies and procedures. This rulemaking document is economically significant and was reviewed by the Office of Management and Budget under E.O. 12866, "Regulatory Planning and Review." The rulemaking action has also been determined to be significant under the Department's regulatory policies and procedures. NHTSA is placing in the public docket a Final Economic Assessment (FEA) describing the costs and benefits of this rulemaking action. The costs and benefits are summarized earlier in this document.

B. Regulatory Flexibility Act

We have considered the effects of this rulemaking action under the Regulatory Flexibility Act (5 U.S.C. 601 et *seq.)* We have prepared a Regulatory Flexibility Analysis (RFA), which is part of the FEA. The RFA concludes that the final rule could have a significant, short-term economic impact on a substantial number of small businesses, but the economic impact on a substantial number of small businesses need not be significant in the long run. Small organizations and small governmental units will not be significantly affected since the potential cost impacts associated with this rule should only slightly affect the price of new motor vehicles.

The rule will directly affect motor vehicle manufacturers, second-stage or final-stage manufacturers, and alterers; and indirectly affect air bag manufacturers, seating system manufacturers, and dummy manufacturers.

There are approximately five main suppliers of air bag systems. The agency does not believe that any are small businesses. In addition, we believe that there may be some second and third tier manufacturers of components of air bags or air bag sensors that are small businesses. We do not believe, however, that there is a substantial number of them. Since today's rule will increase the demand for air bag systems and advanced air bag system technology, we believe that today's rule will have a positive effect on air bag manufacturers and on second and third tier manufacturers of air bag components.

There are several manufacturers of dummies and/or dummy parts. All of them are considered small businesses. While the rule will not impose any requirements on these manufacturers, we expect it will have a positive impact on these types of small businesses by increasing demand for dummies and/or dummy parts (e.g., accelerometers).

For passenger car and light truck manufacturers, we estimate that there are only about

four small manufacturers (SVMs) in the United States. We believe that these manufacturers, which serve a niche market, do not manufacture even 0.1 percent of total U.S. passenger car and light truck production per year. We note that these manufacturers are already required to certify compliance to Standard No. 208's air bag requirements under ISTEA. In the past, many of these manufacturers have petitioned for temporary relief from the air bag requirements on the basis of economic hardship. We anticipate that these manufacturers will encounter difficulty certifying compliance with the requirements being added to Standard No. 208 by today's rule.

In an effort to address the needs of these SVMs, we have decided to allow them to wait until the end of the phase-in to meet the requirements of today's rule. This will give SVMs more time to perform the engineering analysis and generate the compliance data needed to comply with today's rule. Since the requirements in today's rule will enhance the safety of vehicles and air bags for infants, children, small-statured adults and both belted and unbelted occupants, we believe any delays in compliance should be granted in the narrowest of circumstances only. We are, therefore, limiting this option to manufacturers which produce fewer than 5,000 vehicles per year worldwide.

RVIA asked that final-stage manufacturers be given a one-year extension after the end of the phase-in for large manufacturers. RVIA stated that guidance from incomplete vehicle manufacturers is generally not available until at or very near the startup of new or updated model production and that, therefore, final stage manufacturers will need at least one additional year to meet the new requirements.

NTEA supported the proposal to allow multi-stage produced vehicles to be phased in at the end of the phase-in period. NTEA requested that the phase-in period run from September 1,

2003 to September 1, 2006.

In the initial regulatory flexibility analysis, we stated that we knew of 11 businesses that supply seating systems to van converters and others and that are small businesses. In addition, there are about 10 suppliers of seating systems that are not small businesses. The small businesses serve a niche market and provide seats for less than two percent of vehicles. Depending on the technology manufacturers choose to meet the advanced air bag final rule, these suppliers will have to keep up with the technology.

Bornemann Products Incorporated is a small business that provides seating components to second- and final-stage manufacturers and alterers. Bornemann argued that the cost per vehicle and the impact on small businesses could be significant. Bornemann stated that this rule could have a significant impact on the industry that supplies the "niche" market of individual custom vehicles. Bornemann's concerns have been addressed extensively earlier in this document. We refer the reader to that discussion. Additional information concerning the projected impacts of today's rule on small entities is presented in the FEA.

We believe that second- and final-stage manufacturers and alterers will choose to certify compliance in one of two ways. They will either (1) rely on suppliers to provide them with the same technology (weight sensing, seat track sensing, etc.) provided to the OEM manufacturers or (2) purchase the full seat from the OEM and, leaving the technology in place, reupholster the seat. If they rely on manufacturers to supply them with the same technology, there will be a cost associated with installing the technology in the seat and assuring compliance (e.g., static testing) if they cannot pass through the supplier's certification. There will also be costs associated with certifying compliance with the rigid barrier test.

C. National Environmental Policy Act

NHTSA has analyzed this proposed amendment for the purposes of the National Environmental Policy Act and determined that it will not have any significant impact on the quality of the human environment.

D. Executive Order 13132 (Federalism)

The agency has analyzed this rulemaking in accordance with the principles and criteria contained in Executive Order 13132 and has determined that it does not have sufficient federalism implications to warrant consultation with State and local officials or the preparation of a federalism summary impact statement, The final rule has no substantial effects on the States, or on the current Federal-State relationship, or on the current distribution of power and responsibilities among the various local officials.

E. Unfunded Mandate Reform Act

The Unfunded Mandates Reform Act of 1995 requires agencies to prepare a written assessment of the costs, benefits and other effects of proposed or final rules that include a Federal mandate likely to result in the expenditure by State, local or tribal governments, in the aggregate, or by the private sector, of more than $100 million annually (adjusted for inflation with base year of 1995). This rule will not have a significant expenditure of funds by State, local and tribal governments. However, the cost of the Rule will exceed the expenditure of over $100 million by the private sector. Rather than requiring a specific technology, this rule allows manufacturers to certify compliance with the advanced air bag requirements through a combination of several different technologies. Some of theses technologies, such as a dynamic suppression system, may be quite expensive. Other technologies, such as a weight sensor, are relatively cheap. The

decision as to which technology to place in a particular vehicle rests with the manufacturer of that vehicle. A full assessment of the Rule's costs and benefits is provided in the FRA.

F. Executive Order 12778 (Civil Justice Reform)

This final rule does not have any retroactive effect. Under section 49 U.S.C. 30103, whenever a Federal motor vehicle safety standard is in effect, a state may not adopt or maintain a safety standard applicable to the same aspect of performance which is not identical to the Federal standard, except to the extent that the state requirement imposes a higher level of performance and applies only to vehicles procured for the State's use. 49 U.S.C. 30161 sets forth a procedure for judicial review of final rules establishing, amending or revoking Federal motor vehicle safety standards. That section does not require submission of a petition for reconsideration or other administrative proceedings before parties may file suit in court.

G. Paperwork Reduction Act

In its November 5, 1999 supplemental notice of proposed rulemaking, NHTSA sought public comment on its estimates of the additional collection of information burden imposed on the public as a result of this rulemaking. NHTSA received no comments on the collection of information issues.

This final rule includes the following "collections of information," as that term is defined in 5 CFR Part 1320 Controlline Paperwork Burdens on the Public:

Air Bag Phase-In Reporting Requirements - For the six production years ending on August 31, 2003, August 31, 2004, August 31, 2005, August 31, 2007, August 31, 2008, and August 31, 2009, each manufacturer will be required to report once a year to NHTSA, its annual production of vehicles with advanced air bags. As previously explained, the reporting for the

initial phase-in period will end with the information for the production year ending on August 31, 2005 and the reporting for the second phase-in will end with the information for the production year ending on August 31, 2009. The Office of Management and Budget has approved NHTSA's collection of this information, assigning the collection OMB clearance no. 2127-0599. NHTSA estimates that 1,260 burden hours a year (on all vehicle manufacturers) would be imposed as a result of this collection.

Since today's rule specifies a second phase-in period, we will ask OMB to extend clearance no. 2127-0599 for the additional period of time that the second phase-in period will last. OMB grants extensions of collections for no more than three years at a time. We do not believe that future phase- in report collections will result in burdens on the public of more than 1,260 burden hours (on all vehicle manufacturers) a year.

Air Bag Warning Labels - New air bag warning labels are specified in this final rule. At present, OMB has approved NHTSA's collection of labeling requirements under OMB clearance no. 2127-0512, Consolidated Labeling Requirements for Motor Vehicles (Except the Vehicle Identification Number). This clearance will expire on 6/30/2001, and is cleared for 71,095 burden hours on the public.

For the following reasons, NHTSA estimates that the new air bag warning labels would have no net increase in the information collection burden on the public. There are 24 motor vehicle manufacturers that will be affected by the air bag warning label requirement, and the labels will be placed on approximately 15,500,000 vehicles per year. The label will be placed on each vehicle once. Since, in this final rule, NHTSA specifies the exact content of the labels, the manufacturers will spend 0 hours developing the labels. NHTSA estimates the technical burden

time (time required for affixing labels) to be .0002 hours per label. NHTSA estimates that the total annual burden imposed on the public as a result of the air bag warning labels will be 3,100 hours (15.5 million vehicles multiplied by .0002 hours per label). Since the labels specified in this final rule replace existing labels, no additional burden is imposed on manufacturers.

Advanced Air Bag Information in the Owner's Manual - This final rule requires advanced air bag information in the owner's manual that is in addition to the information already required under Standard No. 208. At present, OMB has approved NHTSA's collection of owner's manual requirements under OMB clearance no. 2127-0541 Consolidated Justification of Owner's Manual Requirements for Motor Vehicles and Motor Vehicle Equipment. This collection includes the burdens that would be imposed as a result of owners' manual information about air bags. This clearance will expire on 10/31/2001 and is cleared for 1,371 burden hours a year on all vehicle manufacturers.

H. Regulation Identifier Number (RIN)

The Department of Transportation assigns a regulation identifier number (RIN) to each regulatory action listed in the Unified Agenda of Federal Regulations. The Regulatory Information Service Center publishes the Unified Agenda in April and October of each year. You may use the RIN contained in the heading at the beginning of this document to find this action in the Unified Agenda.

I. Plain Language

Executive Order 12866 and the President's memorandum of June 1, 1998, require each agency to write all rules in plain language. Standard No. 208 is extremely difficult to read as it contains multiple cross-references and has retained all of the requirements applicable to vehicle

of different classes at different times. Because portions of today's rule amend existing text, much of that complexity remains. Additionally, the availability of multiple compliance options, differing injury criteria and a dual phase-in have added to the complexity of the regulation, particularly as the various requirements and options are accommodated throughout the initial phase-in. Once the initial phase-in is complete, much of the complexity will disappear. At that time, it would be appropriate to completely revise Standard No. 208 to remove any options, requirements, and differentiations as to vehicle class that are no longer applicable.

J. Executive Order 13045

Executive Order 13045 (62 FR 19885, April 23, 1997) applies to any rule that: (1) is determined to be "economically significant" as defined under E.O. 12866, and (2) concerns an environmental, health or safety risk that NHTSA has reason to believe may have a disproportionate effect on children. If the regulatory action meets both criteria, we must evaluate the environmental health or safety effects of the planned rule on children, and explain why the planned regulation is preferable to other potentially effective and reasonably feasible alternatives considered by us.

This rulemaking directly involves decisions based on health risks that disproportionately affect children, namely, the risk of deploying air bags to children. However, this rulemaking serves to reduce, rather than increase, that risk.

K. National Technology Transfer and Advancement Act

Section 12(d) of the National Technology Transfer and Advancement Act (NTTAA)

requires NHTSA to evaluate and use existing voluntary consensus standard?' in its regulatory activities unless doing so would be inconsistent with applicable law (e.g., the statutory provisions regarding NHTSA's vehicle safety authority) or otherwise impractical. In meeting that requirement, we are required to consult with voluntary, private sector, consensus standards bodies. Examples of organizations generally regarded as voluntary consensus standards bodies include the American Society for Testing and Materials (ASTM), the Society of Automotive Engineers (SAE), and the American National Standards Institute (ANSI). If NHTSA does not use available and potentially applicable voluntary consensus standards, we are required by the Act to provide Congress, through OMB, an explanation of the reasons for not using such standards.

We have incorporated the out-of-position tests one and two developed by the International Standards Organization (ISO) as part of the proposed low-risk deployment tests for the out-of-position 5th percentile adult female on the driver-side air bag and for the 6-year-old child on the passenger-side air bag. We have reviewed the proposed SAE seating procedure for the 5th percentile adult female in a dynamic crash test. We have decided against adopting this procedure because it has not yet been adopted by SAE and may not be adopted, in any form, for some time. No other voluntary consensus standards are addressed by this rulemaking.

Appendix A - Glossary

Air Bags--In General

Air bags are inflatable restraints. Enough gas must be pumped into them to cushion

---

[34] Voluntary *consensus* standards are technical standards developed or adopted by voluntary consensus standards bodies. Technical standards are defined by the NTTAA as "performance-based or design-specific technical specifications and related management systems practices." They pertain to "products and processes, such as size, strength, or technical performance of a product, process or material."

occupants. Otherwise, occupants, especially large ones, could "bottom out" the air bag and hit the vehicle interior in a crash. Thus, the amount of pressure within air bags must be carefully controlled. This is done by controlling both the rate at which gas is pumped into the air bag and the rate at which the gas is released from the air bag through vents or microscopic holes in the fabric itself.

Categories of Frontal Air Bags

Advanced air bags. Advanced air bags are air bags that minimize the risk of serious injury to out-of-position occupants and provide improved protection to occupants in high speed crashes. They accomplish this either by incorporating various technologies that enable the air bags to adapt their performance to a wider range of occupant sizes and crash conditions and/or by being designed to both inflate in a manner that does not pose such risk as well as to provide improved protection. Some of these technologies are multi-stage inflators, occupant position sensors, occupant weight and pattern sensors, and new air bag fold patterns. (The inflators and sensors are explained below.)

Redesigned air bags.[35] Redesigned air bags are bag systems used in vehicles that have been certified to the unbelted sled test option instead of the unbelted crash test option in Standard No. 208. Many of the redesigned air bags in MY 1998 and 1999 vehicles have less power than the air bags in earlier model years of that vehicle model. However, the power levels of current air bags vary widely. For example, the redesigned air bags in some current vehicles are more powerful than the unredesigned air bags in some earlier vehicles.

[35] These air bags are also sometimes called depowered air bags, second generation air bags or next generation air bags.

Inflators

Inflators are the devices which pump the gas into air bags to inflate them in a crash.

Single stage inflators. Single stage inflators till air bags with the same level of power in all crashes, regardless of whether the crash is a relatively low or high speed crash.

Multi-stage inflators. Multi-stage inflators (also known as multi-level inflators) operate at different levels of power, depending on which stage is activated. The activation of the different stages can be linked to crash severity sensors. In a vehicle with dual-stage inflators, only the first stage (lowest level of power) will be activated in relatively low speed crashes, while the first and second stages (highest level of power) will be activated in higher speed crashes. As crash severity increases, so must the pressure inside the air bag in order to cushion the occupants.

Sensors

Many advanced air bag systems utilize various sensors to obtain information about crashes, vehicles and their occupants. This information is used to adapt the performance of the air bag to the particular circumstances of the crash. It is used in determining whether an air bag should deploy and, if it should, and if the air bag has multiple inflation levels, at what level. Examples of these sensors include the following:

Crash severity sensors. Crash severity sensors measure the severity of a crash, i.e., the rate of reduction in velocity when a vehicle strikes another object. If a relatively low severity crash is sensed, only the lowest stage of a dual-stage inflator will till the air bag; if a more severe crash is sensed, both stages will till the air bag, inflating it at a higher level.

Belt use sensors. Belt use sensors determine whether an occupant is belted or not. An

advanced air bag system in vehicles with crash severity sensors and dual-stage inflators might use belt use information to adjust deployment thresholds for unbelted and belted occupants. Since an unbelted occupant needs the protection of an air bag at lower speeds than a belted occupant does, the air bag would deploy at a lower threshold for an unbelted occupant. (Deployment thresholds are explained below.)

Seat position sensors. Seat position sensors determine how far forward or back a seat is adjusted on its seat track. An advanced air bag system could be designed so a dual-stage air bag deploys at a lower level when the seat is all the way forward than it does when the seat is farther back. This would benefit those short-statured drivers who move their seats all the way forward.

Occupant weight sensors. Occupant weight sensors measure the weight of an occupant. An advanced air bag system might use this information to prevent the air bag from deploying at all in the presence of children.

Pattern sensors. Pattern sensors evaluate the impression made by an occupant or object on the seat cushion to make determinations about occupant presence and the overall size and position of the occupant. They could also sense the presence of a particular object like a child seat. An advanced air bag system might use this information to prevent the air bag from deploying in the presence of children. An advanced air bag system might utilize both an occupant weight sensor and an occupant pattern sensor.

Deployment Thresholds

The term deployment threshold is typically used to refer to the lowest range of rate of reduction in vehicle velocity in a crash at which a particular air bag is designed to deploy.

No-tire threshold. The no-fire threshold is the crash speed below which the air bag is

designed to never deploy.

All-fire threshold. The all-fire threshold is the crash speed at or above which the air bag is designed to always deploy.

Gray zone. The gray zone is the range of speeds between the no-fire and all-tire thresholds in which the air bag may or may not deploy.

Vehicles with advanced air bags may have different deployment thresholds for belted and unbelted occupants, e.g., the deployment threshold may be higher if an occupant is belted. (See belt use sensors above.)

Crash Tests vs. Sled Tests

In crash tests, instrumented test dummies are placed in a vehicle which is then crashed into a barrier. Measurements from the test dummies are used to determine the forces, and estimate the risk of serious injury, that people would have experienced in the crash.

In sled tests, no crash takes place. The vehicle is placed on a sled-on-rails, and instrumented test dummies are placed in the vehicle. The sled and vehicle are accelerated very rapidly backward by means of a generic acceleration pulse. As the vehicle moves backward, the dummies move forward inside the vehicle in much the same way that people would in a frontal crash. The air bags are manually deployed at a pre-selected time during the sled test. Measurements from the dummies are used to determine the forces, and estimate the risk of serious injury, that people would have experienced if the vehicle experienced that level of deceleration.

Fixed Barrier Crash Tests

All of the crash tests adopted in this final rule are fixed barrier crash tests, i.e., the test

vehicle is crashed into a barrier that is fixed in place (as opposed to moving). The types of fixed barrier crash tests are shown in Figure B 1.

Rigid barrier test, perpendicular impact. In a rigid barrier, perpendicular impact test, the vehicle is crashed straight into a rigid barrier that does not absorb any crash energy. The full width of the vehicle's front end hits the barrier.

Rigid barrier, oblique impact test. In a rigid barrier, oblique impact test, the vehicle is crashed at an angle into a rigid barrier.

Offset deformable barrier test. In an offset deformable barrier test, one side of a vehicle's front end, not the full width, is crashed into a barrier with a deformable face that absorbs some of the crash energy.

Figure 3.
Types of Fixed Barrier

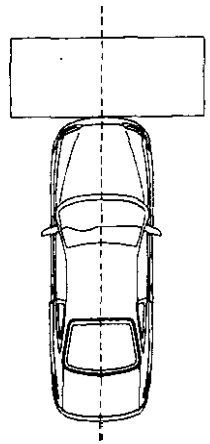

erpend

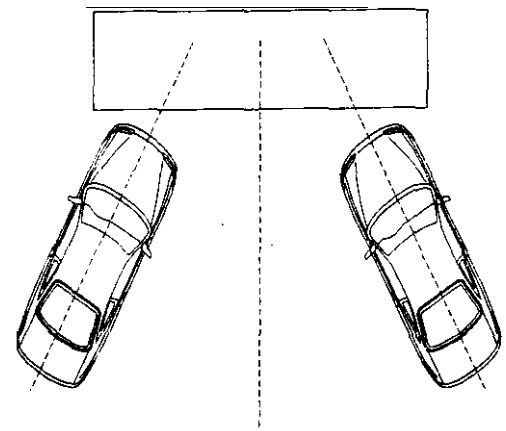

Rigid Barrier, Oblique Impact

Left Deg30
Impact

Right 30 Deg
Impact

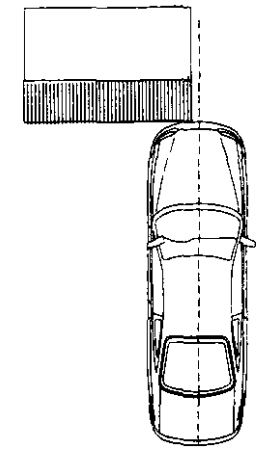

Deformable Barrier, 40% Overlap
Driver Side Engaged

Crash Pulses

A crash pulse is the graph or picture of how quickly the vehicle occupant compartment is decelerating at different times during a crash.

Stiff crash pulses. In crashes with stiff pulses, the occupant compartment decelerates very abruptly. An example of a crash with a stiff pulse would be a full head-on crash of a vehicle into a like vehicle. The perpendicular rigid barrier crash test produces a stiff crash pulse.

Soft crash pulses. In crashes with soft pulses, the occupant compartment decelerates less abruptly, compared to crashes with hard pulses. An example of a crash with a soft pulse would be the crash of a vehicle into sand-tilled barrels such as those seen at toll booths or at the leading edge of a concrete median barrier. The offset deformable barrier crash test and the 30 degree oblique rigid barrier crash test produce soft crash pulses.

In crashes involving comparable reductions in velocity, an unrestrained occupant would hit the vehicle interior (i.e., steering wheel, instrument panel and windshield) at a much higher speed in a crash with a stiff pulse than in a crash with a soft pulse.

Belted and Unbelted Tests

Belted tests use belted dummies, while unbelted tests use unbelted dummies. Despite increases in seat belt use, nearly SO percent of all occupants in fatal crashes are unbelted. Unbelted tests are intended to evaluate the protection provided these persons, many of whom are teenagers and young adults.

Static Low Risk Deployment Tests

Static out-of-position tests are called “static” because the vehicle does not move during the test. These tests are used to measure the risk that an air bag poses to out-of-position

occupants. Test dummies are placed in specified positions that are extremely close to the air bag, typically with some portion of the dummy touching the steering wheel or instrument panel. The air bag is deployed. Measurements from the test dummy are used to determine the forces, and estimate the risk of serious injury, that people would have experienced in the crash.

Injury Criteria and Performance Limits--In general

In a crash test, sled test, or static out-of-position test, measurements are taken from the test dummy instruments that indicate the forces that a person would have experienced under the same conditions. Standard No. 208 specifies several injury criteria. For each criterion, the Standard also specifies a performance limit, based on the level of forces that create a significant risk of producing serious injury.

Injury Criteria

This final rule adopts performance limits for various injury criteria to address the risk of several types of injuries. Among these injury criteria are:

Head Injury Criterion or HIC. Head Injury Criterion or HIC addresses the risk of head injury;

Nij. Nij addresses the risk of neck injury; and

Chest Acceleration and Chest Deflection. Chest Acceleration and Chest Deflection address the risk of chest injury.

Test Dummies

This final rule specifies the use of several test dummies to represent children and adults of different sizes. These dummies are:

12-month old Crash Restraints Air Bag Interaction (CRABI) dummy, representing an

infant;

Hybrid III 3-year-old and 6-year-old child dummies, representing young children;

Hybrid III 5th percentile adult female dummy, representing a small woman;

Hybrid III 50th percentile adult male dummy, representing an average-size man.

Appendix B - Evolution of the Air Bag Provisions in Standard No. 208

The occupant protection requirements in Standard No. 208 have been evolving for more than 30 years. It is only relatively recently, however, that vehicle manufacturers have actually been required to install any air bags. Although vehicle manufacturers first installed air bags in a small number of vehicles in the mid-1970s and began installing air bags in a significant number of vehicles in the mid-1980s, it was not until the mid to late 1990s (MY 1997) that manufacturers were first required to install any air bags in any motor vehicle.

We issued our first notice concerning air bags in 1969. 34 F.R. 11148; July 2, 1969. In response to the low rate of seat belt use, we amended Standard No. 208 in 1971 to require automatic restraints (i.e., devices like air bags and automatic belts that protect in frontal crashes without requiring any action by the occupant) in all passenger cars in 48 km/h (30 mph) crash tests beginning with MY 1976. 37 F.R. 3911; February 24, 1972.[36] In Chrysler Corn. v. DOT. the Sixth Circuit Court of Appeals upheld the basic validity of that requirement, finding it reasonable and practicable, but directed NHTSA to issue more precise test dummy specifications in order to achieve greater objectivity. After complying with that directive, NHTSA proposed

---

[36] Passenger cars manufactured between August 1973 and August 1975, could meet the requirements of FMVSS No. 208 through any of three options, two of which were for automatic restraints. One of the automatic restraint options required automatic protection in frontal crashes and required manual seat belts at each designated seating position. The other automatic restraint option required automatic protection in frontal, side and rollover crashes and did not require any seat belts in the vehicle. The other option was for manual seat belts. Cf. 49 CFR 571.208 S4.1.2. These options were later extended in several rulemakings to August 31, 1986.

automatic restraint requirements in 1974. We did not take final action on that proposal.

Instead, after issuing a new notice in 1976 (41 F.R. 24070; June 14, 1976) seeking comment on a variety of alternative actions including promoting seat belt use laws, requiring automatic restraints, and initiating a field test of automatic restraints, the Department decided in early 1977 to initiate a field test of automatic restraints. Pursuant to that decision, contracts were negotiated with vehicle manufacturers for the voluntary offering for sale of 500,000 automatic restraint passenger cars. It was anticipated that those passenger cars would be equipped with air bags.

However, this field test was never completed. Instead, in mid-1977, the Department decided to go ahead and once again mandate automatic restraints in passenger cars. 42 F.R. 34289; July 5, 1977. The requirements were to be phased in, beginning in MY1983. However, in 198 I, NHTSA rescinded the requirements because it said that it was unable to find that more than minimal safety benefits would result from the vehicle manufacturers' plan to comply with the requirements by installing detachable automatic belts instead of air bags. 46 F.R. 53419; October 29, 198 1.

In June 1983, the Supreme Court held that NHTSA's rescission of the automatic restraint requirements was arbitrary and capricious. Motor Vehicle Manufacturers' Association v. State Farm Mutual Automobile Insurance Co., 463 U.S. 29 (1983). In particular, the Court found the agency had failed to present an adequate basis and explanation for rescinding the requirement.

The Court unanimously found that, even if the agency was correct that detachable automatic belts would yield few benefits, that fact alone would not justify rescission. Instead, it would justify only a modification of the requirement to prohibit compliance by means of that

type of automatic restraint. The Court also unanimously held that having concluded that detachable automatic belts would not result in significantly increased usage, NHTSA should have considered requiring that automatic belts be continuous (i.e., nondetachable) instead of detachable, or that Standard No. 208 be modified to require the installation of air bags.

In response to the Supreme Court's decision, the Department issued a proposal in late 1983 seeking public comment on an array of alternatives similar to those in the Department's 1976 notice. 48 F.R. 48622; October 19, 1983. Among those alternatives was mandating air bags.

However, when the Department issued a rule in 1984, it did not establish such a mandate. Instead, it required that some type of automatic restraint be installed in passenger cars. Thus, the manufacturers had a choice of a variety of methods of providing automatic protection, including automatic seat belts and air bags, as long as certain specified performance requirements were met in a 48 km/h (30 mph) crash test into a rigid barrier using 50th percentile adult male dummies. Further, the requirements gave vehicle manufacturers broad flexibility in selecting the design and performance characteristics of their automatic restraints as long as they met the performance requirements.

The Department expressly recognized in its 1984 rule that the vehicle manufacturers had raised concerns about potential adverse effects of air bags to out-of-position occupants. In response to those concerns, the Department identified a variety of technological concepts for

addressing those risks. See the July 11, 1984 Final Regulatory Impact Analysis, pp. III-8 to 1 0.[37] The flexibility provided by the 1984 rule included the opportunity for vehicle manufacturers to develop and incorporate those technologies, now known as advanced air bag technologies. However, that rule (unlike the one being adopted today) did not adopt any regulatory provisions requiring or encouraging the use of those technologies.

The automatic protection requirements were phased in, beginning with MY 1987. Later, the requirements were extended to light trucks, beginning with MY 1995.

A number of vehicle manufacturers initially chose to comply with those requirements by installing automatic belts in many of their vehicles. However, ultimately, the early decisions of some manufacturers to install air bags as standard equipment and the positive response of the market to those decisions led to a general move within the industry toward installing air bags in many passenger cars and light trucks by the early 1990's.

In 1991, Congress included a provision in the Intermodal Surface Transportation Efficiency Act (ISTEA) directing us to amend Standard No. 208 to require that all passenger cars

---

[37] The July 11, 1984 Final Regulatory Impact Analysis (FRIA) listed a variety of potential technological means for addressing the problem of injuries associated with air bag deployments including dual level inflation systems and other technological measures such as bag shape and size, instrument panel contour, aspiration, and inflation technique. It also noted that a variety of different sensors could be used to trigger dual level inflation systems, e.g., a sensor that measures impact speed, a sensor that measures occupant size or weight and senses whether an occupant is out of position; and an electronic proximity sensor.

For the most part, the introduction of these technologies in new motor vehicles did not begin until the late 1990's. A number of the vehicle manufacturers are known to be working now very actively on an array of advanced air bag technologies.

and light trucks provide automatic protection by means of air bags.[38] ISTEA required air bags in all passenger cars beginning with MY 1998, and in all light trucks beginning with MY 1999. We published the rule implementing this mandate on September 2, 1993 (58 F.R. 46551).

Like the automatic restraint requirements issued in 1984, the air bag requirements issued in 1993 were performance requirements that did not specify the design of an air bag system Instead, they gave vehicle manufacturers substantial design flexibility. They permitted, but did not require, vehicle manufacturers to develop and use advanced air bag technologies in designing their air bags to minimize the risks from air bags, in particular, the risk of serious injury to unbelted, out-of-position occupants, including children and small drivers

Thus, the manufacturers had significant freedom under Standard No. 208 to develop and install means of protecting the wide variety of occupants under a broad range of crash conditions, such as the types of crashes, the crash speeds at which the air bags deploy, the initial direction in which they deploy, the force with which they deploy, the time of deployment during the crash, air bag tethering and venting to control inflation force when a deploying air bag encounters an occupant close to the steering wheel or dashboard, the use of sensors to suppress air bag inflation in the presence of rear-facing child restraints or the presence of small children, the use of sensors to detect occupant position to prevent air bag inflation if appropriate, and the use of multi-stage inflators to adjust air bag force to the crash situation, Multi-stage inflators allow tailoring of air bag performance to match the circumstances of a crash. For example, air bag deployment can be

---

[38] TEA 21 is thus the second Congressional act narrowing the discretion provided by the Department's 1984 rule regarding automatic protection. That rule mandated automatic protection, but explicitly provided discretion with respect to the type of automatic protection (e.g., automatic seat belts and air bags), and implicitly allowed the use ofadvanced air bag technologies.

ISTEA mandated the installation of air bags. TEA 21 mandates the use of advanced air bag technologies or other means to reduce air bag-induced risks.

tailored in response to crash severity so that force levels are lower in less severe crashes than they are in more severe crashes. The less severe crashes are the type of crashes in which full force is not needed and in which air bag-induced fatalities to out-of-position occupants have occurred.

Until March 1997, the injury criteria limits in Standard No. 208 had to be met for air bag-equipped vehicles in barrier crashes at speeds up to 48 km/h (30 mph), with the 50th percentile adult male dummies wearing seat belts, and in separate barrier crashes at those speeds with dummies unbelted. Then, however, concerns about the rising number of air bag-induced fatalities led us to publish a rule (62 F.R. 12960; March 19, 1997) providing manufacturers with the option of certifying the air bag performance of their vehicles with an unbelted dummy in a sled test incorporating a 125 millisecond standardized crash pulse instead of in a vehicle-to-barrier crash test. We adopted this amendment for two principal reasons. First, the lead time for reducing a significant portion of the risk of air bag-induced fatalities through reducing the force of air bags as they deploy (i.e., depowering) was shorter than the lead time for addressing those risks through developing and installing advanced air bag technologies. Second, allowing manufacturers to use the less stringent, less expensive and easier to conduct sled test made it easier to maintain compliance with Standard No. 208 while depowering their air bags and making other design changes. This shortened the lead time for depowering, compared to the time it would have taken to recertify vehicles with depowered air bags using a barrier crash test.

In the March 1997 rule, we specified that the sled test option would terminate on September 1, 2001. We concluded that there was no need to reduce Standard No. 208's performance requirements permanently, based on our belief in 1997 that advanced air bag

technologies could be incorporated into new vehicles by 2001 and thus enable manufacturers to reduce air bag risks while continuing to meet the 48 km/h (30 mph) unbelted barrier crash test.

The September 1, 2001 sunset date for the sled test option was superseded by a provision in TEA 21. In a paragraph titled "Coordination of Effective Dates," TEA 21 provides that the unbelted sled test option "shall remain in effect unless and until changed by [the final rule for advanced air bags]."

Appendix C - Chronology of DOT and NHTSA Responses to Air Bag Risks and Fatalities

A. Introduction

As the following chronology demonstrates, DOT/NHTSA have repeatedly and publicly addressed the issue of risk to out-of-position occupants from air bags in regulatory decisions about automatic restraints and air bags for more than 20 years. More important, concerns about that issue helped to shape the DOT/NHTSA regulatory decisions during 1980s and 1990s.

B. Chronology

In its 1977 rule requiring automatic restraints, the Department discussed the possibility of "side effects of air bag installation" at length. That discussion included the issue of risks for out-of-position occupants. 42 F.R. 34289; July 5, 1977.

In 1981, Minicars, Inc., a NHTSA research contractor, issued reports on the successful efforts to build and test devices, including dual-stage inflators, for controlling passenger air bag inflation so as to avoid harming out-of-position children.[39]

In deciding in 1984 to issue rule requiring automatic restraints, the Department

---

[39] "Small Car Front Seat Passenger Inflatable Restraint System (Vol. I - Chevette and Omni)," "Small Car Front Seat Passenger Inflatable Restraint System (Vol. II -Citation),"" Upgrade Volvo Production Restraint System."

considered vehicle manufacturer comments that air bags would pose risks to out-of-position occupants, particularly *in* small cars. The lack of experience with the technical means for addressing those risks was one of the reasons expressly cited by the Department for rejecting the alternative of mandating air bags. 49 F.R. 28962, at 29001; July 17, 1984.

While the Department noted in the 1984 rule that use of technical solutions such as sensors to adjust deployment could lessen the problem, it said that it could not "state for certain that air bags will never cause injury or death to a child." As discussed above, other technical solutions were identified in the Final Regulatory Impact Analysis for that rule, including dual-stage inflation systems and other technological measures such as bag shape and size, instrument panel contour, aspiration, and inflation technique. It also noted that a variety of different sensors could be used to trigger dual-stage inflation systems.

In 1985, NHTSA denied petitions for reconsideration of the 1984 rule. NHTSA noted that the 1984 "final rule acknowledged concerns about the effects of air bag systems on out-of-position occupants; however, it also explained that technical solutions are available to address the out-of-position occupant problem." NHTSA said that concerns about air bag risks and a variety of other factors led to the Department's decision not to mandate air bags for all cars. 50 F.R. 35233, at 35234; August 30, 1985.

Two years later, in 1987, NHTSA amended Standard No. 208 to delay the requirement for any type of automatic restraint for the passenger seating position in a passenger car if the car had a driver air bag. This action was taken in response to a petition by Ford. The agency said that the length of the delay was based on the time that the vehicle manufacturers said was necessary to complete the development and installation of passenger air bags. Ford said in its

petition that there were a number of uncertainties, including technical problems, concerning the development of those air bags. Ford said that it was concerned that passenger air bags could pose risks for standing children and other occupants who are out of position due, for example, to pre-crash braking. It said, however, that it expected to solve these problems if its petition were granted so that it could proceed in an orderly, controlled manner to gain experience with passenger-side applications. 52 F.R. 10096; March 30, 1987.

In 1991, NHTSA issued a rule amending Standard No. 201, Occupant Protection in Interior Impact, 49 CFR 571.201, to facilitate installation of top-mounted, vertically deploying passenger air bags. This rulemaking was conducted in response to a petition by Chrysler, which said that this type of air bag would reduce the risks for standing children and out-of-position occupants. Ford and GM supported the petition and concurred that these air bags had the potential for reducing risks to out-of-position children and adults. 56 F.R. 26036; June 6, 1991.

Also in 1991, NHTSA issued a Consumer Advisory warning owners of rear-facing child seats not to use such a restraint in the front seat of a vehicle equipped with a passenger air bag. This warning was based on preliminary results of testing regarding this problem. At that time, no casualties to infants had occurred.

In the 1993 rule implementing the air bag mandate in ISTEA, NHTSA required vehicles equipped with air bags to bear labels on the sun visors providing four specific cautions, including a statement not to install rearward-facing child seats in front passenger positions, and advising the occupant to see the owner's manual for further information and explanations. 58 F.R. 46551; September 2, 1993.

In 1994, NHTSA issued a rule amending Standard No. 213, Child Restraint Systems, to

require rear-facing child seats to bear a warning against using the restraint in any vehicle seating position equipped with an air bag. 59 F.R. 7643; February 16, 1994.

In 1995, NHTSA issued a rule allowing manufacturers to install a manual device that motorists could use to deactivate the front passenger-side air bag in vehicles in which rear-facing child seats can only fit in the front seat. 60 F.R. 27233; May 23, 1995. On October 27, 1995, in response to several fatalities to improperly-restrained children in air bag-equipped positions, NHTSA issued a strong warning in a press release. This release broadened the previous agency warnings about young children to apply to older children and even adults who may ride unrestrained.

In 1996, the agency issued a rule requiring improved labeling on new vehicles and child restraints to provide greater assurance that drivers and other occupants are aware of the dangers posed by passenger air bags to children, particularly to children in rear-facing infant restraints in vehicles with operational passenger air bags. 61 F.R. 60206; November 27, 1996.

In 1997, the agency took three important steps to address air bag risks through vehicle safety rulemaking. First, we issued a rule extending until September 1, 2000, the existing provision permitting vehicle manufacturers to offer manual on-off switches for the passenger air bag for new vehicles without rear seats or with rear seats that are too small to accommodate rear-facing infant restraints. 62 F.R. 798; January 6, 1997. Second, we issued a rule temporarily amending Standard No. 208 to facilitate efforts of vehicle manufacturers to redesign their air bags quickly so that they inflate less aggressively. This change, coupled with the broad flexibility already provided by the standards existing performance requirements, provided the vehicle manufacturers maximum flexibility to reduce the adverse effects of current air bags

quickly. 62 F.R. 12960; March 19, 1997. Third, we issued a rule exempting, under certain conditions, motor vehicle dealers and repair businesses from the "make inoperative" prohibition of 49 U.S.C. 30122 by allowing them to install retrofit manual on-off switches for air bags in vehicles owned by people whose request for a switch had been authorized by NHTSA. 62 F.R. 62406; November 21, 1997.

Appendix D - Installation of Advanced Technologies in Current Production Motor Vehicles

A. Introduction

The level of risk of air bag-induced fatalities depends to a significant extent on air bag system design. There are various advanced air bag technologies that have been or are being developed and that, if incorporated in air bag systems, can improve protection of occupants of different sizes, belted and unbelted, and minimize the risks from air bags.[40] For example, an air bag need not be designed so that it inflates with full force under all circumstances. Dual-stage inflators can be used in combination with various types of sensors (e.g., crash severity, seat position, and belt use) and improved algorithms to adjust the deployment threshold or air bag inflation pressure and pressure rise rate and thereby reduce risk. Different folding patterns and aspiration designs, as well as systems that suppress air bag deployment altogether in appropriate circumstances, also could reduce risk. For example, higher speed deployment thresholds could prevent deployment in low speed crashes, and weight sensors could be used to prevent deployment when children are present. In addition, recessed air bag modules, compartmentalized

---

[40] Air bag systems are only one of many automotive applications of increasingly sophisticated technology. Equally sophisticated technology is being used in many other existing vehicle systems as well as in entirely new ones. Examples include backup obstacle detection warning systems, adaptive cruise controls, rollover sensors, rain-activated windshield wiper systems, global positioning systems, head-up displays of information on the windshield, night vision systems, antilock braking systems, and tire pressure monitoring systems.

and internally-tethered air bags, bias flaps, and low break-out force covers could make deploying air bags more benign for out-of-position occupants.

B. Key Parts of Air Bag Systems

In analyzing potential improvements in air bag system performance, it is useful to divide the system into 3 discrete parts:

1. Information: acquiring information about crashes and occupants,
2. Analysis/Decision: analyzing that information to determine the nature of the crash and the circumstances of the front seat occupants, and deciding how to adjust the response of the air bag system accordingly, and
3. Response: adjusting the performance of the air bag in response to the decisions regarding the acquired information.

Air bag systems acquire information through the use of sensors. All air bag systems have some kind of crash sensor indicating the occurrence of a crash and its severity. The systems process information from the sensors and use an algorithm to make decisions on the desired air bag deployment and performance based on predictions about the crash event. The systems may also have sensors which provide information about such things as belt use, child seat use, occupant weight and size, seat adjustment position, and occupant location. The information from the sensors is used by the electronic control unit in making decisions as to whether and when the air bag is to be deployed. Air bags using advanced technologies could use the information to tailor the inflation levels of multi-stage air bags.

The information, analysis/decision, and response aspects of air bag systems each offer opportunities for improving occupant protection. With more and better information, improved

decision-making algorithms, and greater adjustment capability to tailor the inflation, an air bag system can be designed to provide an improved response.

For example, with improved information about crash severity, the deploy/don't deploy decision can be made earlier in a crash. By deploying earlier during a crash, before the occupant has moved very far forward, the air bag can better protect the occupant and is less likely to pose risks to the occupant. If an air bag system includes sensors which provide information about occupant weight and/or size or location, it can be designed to suppress deployment in the presence of a young child or to deploy differently for small adults and large adults (e.g., a lower level of inflation for a smaller adult than that for a larger one).

While some aspects of improved performance are dependent on more or better sensor information, others are not. For example, while a suppression device requires information about occupant category or location, other approaches that could reduce air bag aggressiveness, such as improved fold patterns, lighter weight air bag fabrics, air bag cover design, low break-out force openings, tethering and bias flaps are not information-dependent.

C. Specific Advanced Technologies

Sensors - General. Advanced air bag systems can use various types of sensors to obtain information about crashes, vehicles and their occupants. This information can be used to adapt the performance of the air bag to the particular circumstances of the crash. As noted above, it can be used in determining whether an air bag should deploy, when it should deploy, and (if it has multiple inflation levels) at what level of inflation (pressure rise) and inflation rate (pressure rise rate).

Sensors - Crash severity. Crash severity sensors measure the severity of a crash; i.e., the

rate of reduction in velocity when a vehicle strikes another object. If a relatively low severity crash is sensed, only the lowest stage of a dual-stage inflator will fill the air bag; if a moderate severity crash is sensed, both stages will fill the air bag with a specific time delay between the two stages; and if a more severe crash is sensed, both stages will till the air bag either simultaneously or with a 5 - 10 msec interval in between the stages.

Improvements are being made in crash sensing hardware to provide earlier crash detection and more accurate estimates of crash severity and proper decision for timely deployment. Current trends in crash sensor hardware involve the use of either a single-point electronic sensor or a combination of electromechanical and electronic sensors.[41] Electronic sensors use microprocessor technology to compute the deceleration time history of the vehicle along with the integration of various other input factors to determine whether air bag deployment is appropriate.

Sensors - Passenger weight and seat pattern. Passenger air bag systems may incorporate advanced technologies to suppress the air bag in the presence of children to prevent undesirable deployments. To accomplish this, manufacturers are refining seat weight or seat pattern recognition systems for detecting passenger occupant size and/or position.

For example, some occupant detection systems will use an array of sensors in the seat cushion to measure either the pressure distribution or deflection pattern resulting from the occupant in the seat to make a determination on whether to deploy or suppress the air bag system. Child safety seats, for example, are more readily identifiable by these systems, since

---

[41] Based on information from the responses to the December 1997 IR, 44 percent of the MY 1998 vehicles in the IR fleet had only one crash sensor and 73 percent had either a single electronic or a combination electronic and electromechanical.

they have a distinct "footprint" when compared to the human buttocks.

Weight sensing systems estimate the weight of the occupant through various load cell technologies located in the seat cushion or at the base of the seat. The latter approach has the potential for avoiding the possible difficulties that can be created for seat-cushion weight sensors when the seat back is tilted back enough to transfer a significant portion of the occupant's weight from the seat cushion to the seat back. The algorithms associated with these devices can be designed to take into consideration and minimize the effects of belt cinch forces (for example, from child safety seats) by using belt tension-measuring hardware to make an adjusted assessment of weight.

Sensors - Occupant size and/or location. Other advanced occupant detection systems under development use technologies, such as capacitive, ultrasonic, and infrared, for sensing occupant size and/or location with respect to the air bag module. These are used in the development of dynamic and static suppression strategies.

Strategies for static occupant detection systems[42] include the ability to make a determination of whether air bag deployment is warranted (or what level of inflation is appropriate) for the size and/or position of the occupant (e.g., whether the occupant is a small child or a full-sized adult, or whether the occupant is against the seat back or is sitting on the edge of the seat, closer to the air bag). These technologies may be used in conjunction with seat weight sensing/pattern recognition systems (or seat belt use and crash severity sensing) to improve the reliability of the occupant classification and location estimates.

---

[42] Static detection systems monitor steady state conditions such as occupant weight. In contrast, dynamic detection systems continuously monitor an occupant's position in relation to the air bag module.

Dynamic suppression strategies using advanced technologies, such as capacitive, ultrasonic, and infrared, will be able to make dynamic assessments of when an occupant is out of position by determining the location of the occupant during the course of a crash. These technologies must have rapid sensing capabilities and algorithms to make the air bag deployment or suppression decision, for example, in the event of pre-impact braking. These systems would have the added benefit of protecting not only children, but also out-of-position adults. (Note: This is another advanced technology still under development.)

Sensors - Belt use or forward/aft seat adjustment position. Air bag systems may be linked to sensors that determine whether the occupant is using his or her seat belt and whether the occupant has positioned the vehicle seat along the seat track (i.e., all or nearly all the way forward or farther back). An advanced air bag system in vehicles with crash severity sensors and dual-stage inflators could use seat belt use information to adjust deployment thresholds or inflation levels depending on whether the occupant is belted or unbelted. Since an unbelted occupant is more susceptible than a belted occupant to injury in less severe crashes, the unbelted occupant needs the protection of an air bag at lower crash severities than a belted occupant does. Accordingly, the air bag would deploy at a lower threshold for an unbelted occupant.

Seat position sensors determine how far forward or back a seat is adjusted on its seat track. An advanced air bag system could be designed so a dual-stage air bag deploys at a lower level when the seat is all the way forward than it does when the seat is farther back. This would benefit those short-statured drivers who move their seats all the way forward, or mid-to-tall-statured drivers who move their seats farther back.

In the MY 2000 Ford Taurus/Mercury Sable, the air bag system will fire the low energy

strategy for the driver air bag when the seat is positioned in or near the full forward position. This provides a more benign deployment for small-statured occupants who sit closer to the air bag. Ford also provides the option of installing adjustable pedals on some of its vehicle platforms to assist driver occupants in positioning themselves further away from the air bag. Both seat position sensors and adjustable pedals can be used in conjunction with the previously mentioned seat belt use and crash severity information to affect air bag performance.

Multiple crash severity thresholds. Some current production motor vehicles are using information from crash severity sensors in conjunction with seat belt use sensors to select the appropriate crash severity threshold levels for belted and unbelted occupants. For instance, dual speed thresholds for deploying air bags have been used in Mercedes-Benz vehicles produced for the U.S. market for several years. In these vehicles, the lower threshold for air bag deployment is approximately 19 km/h (12 mph) when an occupant is unbelted and a higher threshold of approximately 29 km/h (18 mph) is utilized when the an occupant is belted. A belt buckle switch provides the information to allow the selection between these two thresholds. Other vehicle manufacturers also have implemented similar strategies.

Multiple levels of inflation. In addition to using crash severity and seat belt use information for dual threshold strategies, this information also can be utilized to employ different inflation levels for belted and unbelted occupants through the use of a multi-stage air bag inflator. For instance, a belted occupant may only need a low powered inflation level, since the seat belts also provide restraint, while an unbelted occupant may require a full-powered air bag to provide a timely inflation and full protection by the air bag. Similarly, the crash severity information may be used with a multi-stage inflator to employ a low level of air bag inflation in a

low severity crash or a full power inflation in a high severity crash, in which additional restraint is needed for occupant protection.

Improved seat belt systems. Many advances have also been made in seat belt systems to improve their performance when used in conjunction with air bag systems. These systems can reduce the risk of air bag-induced injury to a belted occupant. Many production vehicles (approximately 180 vehicle models)[43] are providing seat belt energy management features and/or pretensioners in MY 2000 vehicles. Pretensioners are devices that retract the seat belt to remove excess slack during a crash event. Energy management features, such as load limiting retractors or webbing tear stitching, allow yielding of the seat belt system in order to prevent too much force from being imposed on the occupant's upper chest or lap during a severe crash. This rule's adoption of a higher belted test speed is intended to encourage vehicle manufacturers to consider the use of such advanced technologies. Additional seat belt enhancements include adjustable anchorages, which allow the positioning of the shoulder strap to accommodate a person's size, and integrated seat belt systems, which mount the entire seat belt system directly into the seat to allow better belt fit and restraint performance. Development work also is being done on seat belt webbing spool-out sensors, which could provide additional information about an occupant's size and movement in relation to the air bag module.

Improved air bag hardware. Manufacturers also have made advances in integrating countermeasures into the air bag hardware to mitigate injuries without compromising high speed occupant protection. For example, the driver air bag system of the MY 1999 Saturn SL1 has been designed with a number of injury-mitigating countermeasures. These include a patented I-

---

[43] NHTSA brochure DOT HS 808 988: "Buying a Safer Car 2000," September 1999.

tear seam cover, a unique air bag fold, recessed air bag module, 4 internal tether straps, and an air bag whose depth and volume are relatively small. The MY 1999 Saturn SL1 passenger air bag also includes an internal bias flap, which redirects the flow of gas laterally instead of toward the occupant.

Other available air bag hardware countermeasures which minimize the risks to out-of-position occupants include:

Low break-out force covers - By reducing the amount of force needed for an air bag to break out of the module housing in the steering wheel or instrument panel, these covers help make it possible to reduce the “punch out” effect of deploying air bags.

Radial deployment paths - For an air bag with a radial deployment path, the initial primary thrust of the deploying air bag is radial instead of toward the person sitting in front of the air bag.

Compartmented air bags - These air bags can function as an air bag within an air bag. If coupled with a dual-stage inflator, the first stage can inflate the smaller, inner air bag for small adults seated near the steering wheel and both stages can inflate the full air bag.

Pyrotechnic venting - One means of reducing the aggressiveness of a deploying air bag is to provide an alternative inflation path for venting air bag gases. If an out-of-position occupant is putting pressure on the air bag, the pressure can be vented in a

different direction. This can be achieved through vent holes in the inflator canisters or pyrotechnically actuating vents which close holes in the reaction surface of the inflator canister.

Air bag aspiration - Another means of reducing the aggressiveness of a deploying air bag is to use an aspirated inflation system to draw in outside air into the gas stream as the air bag is being filled. If an out-of-position occupant interferes with the deployment of the air bag, the pressure within the bag will increase, and the aspirating system would cease operating as soon as that increased pressure within the air bag reaches a predetermined design level.

D. Installation of Advanced Technologies in Current Production Motor Vehicles

A steadily increasing number of passenger car models are now being equipped with some types of advanced air bag technologies. Many of these models are foreign luxury vehicles. However, both the MY2000 versions of the second best selling (Honda Accord) and third best selling (Ford Taurus) non-luxury passenger car models in calendar year 1999 are equipped with dual-stage air bags and various advanced technology sensors. While these air bag technologies are not sufficient by themselves to enable these vehicles to comply with this rule, their introduction is indicative of future possibilities.

A partial list of MY 2000 models equipped with advanced air bag technologies appears below:

Acura 3.5 RL and 3.2 TL are equipped with

Dual-stage passenger air bag[44]

Advanced crash severity sensor

Passenger belt use sensor

BMW 3- and 5- models are equipped with

Advanced crash severity sensor

Dual-threshold deployment for driver and passenger air bag

Sensor to help prevent unnecessary deployment of passenger air bag

BMW 7-series models are equipped with

Advanced crash severity sensor

Dual-threshold deployment for driver and passenger air bags

Dual-stage passenger air bag

Sensor to help prevent unnecessary deployment of passenger air bag

BMW X5 is equipped with

Dual-stage driver and passenger air bags

Advanced crash severity sensor

Driver and passenger belt use sensor

Dual-threshold deployment for driver and passenger air bags

---

44 **According to the Acura website, the air bag system:**

automatically adjusts the deployment of the front passenger's air bag SRS based on the severity of the crash and whether or not the passenger is wearing the seat belt. During a slow speed collision, the dual-stage inflator system for the dash-mounted air bag is triggered in sequence, resulting in slower overall air bag deployment with less initial force. During a higher speed-collision, both inflators operate simultaneously for full immediate inflation in order to correspond with the greater impact force.

BMW Z3 and BMW M coupe/roadster are equipped with

Dual-threshold deployment for driver and passenger air bags

Sensor to help prevent unnecessary passenger air bag deployment

Ford Taurus and Mercury Sable are equipped with

Dual-stage driver and passenger air bags

Advanced crash severity sensor

Driver seat position sensor

Driver belt use sensor

Power adjustable accelerator and brake pedals

Honda Accord is equipped with

Dual-stage passenger air bag

Advanced crash severity sensor

Passenger belt use sensor

Mercedes S-class and CL coupe are equipped with

Passenger air bag features dual inflation rates based on impact severity.

Advanced crash severity sensor

Volvo S80 is equipped with

Passenger belt use sensor

Dual deployment threshold for driver and passenger air bags

List of Subjects

49 CFR Part 552

Administrative practice and procedure, Motor vehicle safety, Reporting and recordkeeping requirements.

49 CFR Part 571

Imports, Incorporation by reference, Motor vehicle safety, Reporting and recordkeeping requirements, Tires.

49 CFR Part 585

Motor vehicle safety, Reporting and recordkeeping requirements.

49 CFR Part 595

Imports, Motor vehicle safety, Motor vehicles.

In consideration of the foregoing, NHTSA amends 49 CFR Chapter V as follows:

PART 552--PETITIONS FOR RULEMAKING, DEFECT, AND NON-COMPLIANCE ORDERS

1. The authority citation for Part 552 of Title 49 continues to read as follows:

Authority: 49 U.S.C. 30111, 30118, and 30162; delegation of authority at 49 CFR 1.50.

2. Sections 552.1 through 552.10 are designated as Subpart A and a new subpart heading is added to read as follows:

Subpart A - General

3. A new subpart B is added to Part 552 to read as follows:

Subpart B - Petitions for Expedited Rulemaking to Establish Dynamic Automatic Suppression System Test Procedures for Federal Motor Vehicle Safety Standard No. 208, Occupant Crash

Protection

Sec.

552.11 Application.

552.12 Definitions.

552.13 Form of petition.

552.14 Content of petition.

552.15 Processing of petition.

Subpart B - Petitions for Expedited Rulemaking to Establish Dynamic Automatic Suppression System Test Procedures for Federal Motor Vehicle Safety Standard No. 208, Occupant Crash Protection

§552.11 Application.

This subpart establishes procedures for the submission and disposition of petitions filed by interested parties to initiate rulemaking to add a test procedure to 49 CFR 571.208, S28.

§552.12 Definitions.

For purposes of this subpart, the following definitions apply:

(a) Dynamic automatic suppression system (DASS) means a portion of an air bag system that automatically controls whether or not the air bag deploys during a crash by:

(1) Sensing the location of an occupant, moving or still, in relation to the air bag;

(2) Interpreting the occupant characteristics and location information to determine whether or not the air bag should deploy; and

(3) Activating or suppressing the air bag system based on the interpretation of characteristics and occupant location information.

(b) Automatic suppression zone (ASZ) means a three-dimensional zone adjacent to the air bag cover, specified by the vehicle manufacturer, where air bag deployment will be suppressed by the DASS if a vehicle occupant enters the zone under specified conditions.

(c) Standard No. 208 means 49 CFR 571.208.

§552.13 Form of petition.

Each petition filed under this subpart shall--

(a) Be submitted to: Administrator, National Highway Traffic Safety Administration, 400 Seventh Street, SW., Washington, DC 20590.

(b) Be written in the English language.

(c) State the name and address of the petitioner.

(d) Set forth in full the data, views and arguments of the petitioner supporting the requested test procedure, including all of the content information specified by §552.14. Any documents incorporated by reference in the procedure shall be submitted with the petition.

(e) Specify and segregate any part of the information and data submitted that the petitioner wishes to have withheld from public disclosure in accordance with Part 512 of this chapter including, if requested, the name and address of the petitioner.

(f) Not request confidential treatment for the requested test procedure and, to the extent confidential treatment is requested concerning a particular DASS or data and analysis submitted in support of the petition, provide a general non-confidential description of the operation of the DASS and of the data and analysis supporting the petition.

(g) Set forth a requested effective date and be submitted at least nine months before that date.

§552.14 Content of petition.

The petitioner shall provide the following information:

(a) A set of proposed test procedures for S28.1, S28.2, S28.3, and S28.4 of Standard No. 208 which the petitioner believes are appropriate for assessing a particular DASS.

(1) For S28.1 of Standard No. 208, the petitioner shall specify at least one specific position for the Part 572, subpart 0 5th percentile female dummy that is:

(i) Outside but adjacent to the ASZ, and

(ii) Representative of an unbelted occupant position that is likely to occur during a frontal crash.

(2) For S28.2 of Standard No. 208, the petitioner shall specify at least one specific position for the Part 572 Subpart P 3-year-old child dummy and at least one specific position for the Part 572 Subpart N 6-year-old child dummy that are:

(i) Outside but adjacent to the ASZ, and

(ii) Representative of unbelted occupant positions that are likely to occur during a frontal crash where pre-crash braking occurs.

(3) For S28.3 of Standard No. 208, the petitioner shall specify a procedure which tests the operation of the DASS by moving a test device toward the driver air bag in a manner that simulates the motion of an unbelted occupant during pre-crash braking or other pre-crash maneuver. The petitioner shall include a complete description, including drawings and instrumentation, of the test device employed in the proposed test. The petitioner shall include in the procedure a means for determining whether the driver air bag was suppressed before any portion of the specified test device entered the ASZ during the test. The procedure shall also

include a means of determining when the specified test device occupies the ASZ.

(4) For S28.4 of Standard No. 208, the petitioner shall specify a procedure which tests the operation of the DASS by moving a test device toward the passenger air bag in a manner that simulates the motion of an unbelted occupant during pre-crash braking or other pre-crash maneuver. The petitioner shall include a complete description, including drawings and instrumentation, of the test device employed in the proposed test. The petitioner shall include in the procedure a means for determining whether the passenger air bag was suppressed before any portion of the specified test device entered the ASZ during the test. The procedure shall also include a means of determining when the specified test device occupies the ASZ.

(b) A complete description and explanation of the particular DASS that the petitioner believes will be appropriately assessed by the recommended test procedures. This shall include:

(1) A description of the logic used by the DASS in determining whether to suppress the air bag or allow it to deploy. Such description shall include flow charts or similar materials outlining the operation of the system logic, the system reaction time, the time duration used to evaluate whether the air bag should be suppressed or deployed, changes, if any, in system performance based on the size of an occupant and vehicle speed, and a description of the size and shape of the zone where under similar circumstances and conditions the DASS may either allow or suppress deployment. Such description shall also address whether and how the DASS discriminates between an occupant's torso or head entering the ASZ as compared to an occupant's hand or arm, and whether and how the DASS discriminates between an occupant entering the ASZ and an inanimate object such as a newspaper or ball entering the ASZ.

(2) Detailed specifications for the size and shape of the ASZ, including whether the

suppression zone is designed to change size or shape depending on the vehicle speed, occupant size, or other factors.

(c) Analysis and data supporting the appropriateness, repeatability, reproducibility and practicability of each of the proposed test procedures.

(1) For the procedures proposed for inclusion in S28.1 and S28.2 of Standard No. 208, the petitioner shall provide the basis for the proposed dummy positions, including but not limited to, why the positions are representative of what is likely to occur in real world crashes.

(2) For the procedures proposed for inclusion in S28.3 and S28.4 of Standard No. 208, the petitioner shall provide:

(i) A complete explanation of the means used in the proposed test to ascertain whether the air bag is suppressed or activated during the test.

(ii) A complete description of the means used to evaluate the ability of the DASS to detect and respond to an occupant moving toward an air bag, including the method used to move a test device toward an air bag at speeds representative of occupant movement during pre-crash braking or other pre-crash maneuver.

(iii) The procedure used for locating the test device inside a test vehicle in preparation for testing, including an accounting of the reference points used to specify such location.

(iv) An explanation of the methods used to measure the amount of time needed by a suppression system to suppress an air bag once a suppression triggering event occurs.

(v) High speed film or video of at least two tests of the DASS using the proposed test procedure.

(vi) Data generated from not less than two tests of the DASS using the proposed test

procedure, including an account of the data streams monitored during testing and complete samples of these data streams from not less than two tests performed under the proposed procedure.

(d) Analysis concerning the variety of potential DASS designs for which the requested test procedure is appropriate; e.g., whether the test procedures are appropriate only for the specific DASS design contemplated by the petitioner, for all DASS designs incorporating the same technologies, or for all DASS designs.

§552.15 Processing of petition.

(a) NHTSA will process any petition that contains the information specified by this subpart. If a petition fails to provide any of the information, NHTSA will not process the petition but will advise the petitioner of the information that shall be provided if the agency is to process the petition. The agency will seek to notify the petitioner of any such deficiency within 30 days after receipt of the petition.

(b) At any time during the agency's consideration of a petition submitted under this Part, the Administrator may request the petitioner to provide additional supporting information and data and/or provide a demonstration of any of the requested test procedures. The agency will seek to make any such request within 60 days after receipt of the petition. Such demonstration may be at either an agency designated facility or one chosen by the petitioner, provided that, in either case, the facility shall be located in North America. If such a request is not honored to the satisfaction of the agency, the petition will not receive further consideration until the requested information is submitted.

(c) The agency will publish in the Federal Register either a Notice of Proposed Rulemaking

proposing adoption of the requested test procedures, possibly with changes and/or additions, or a notice denying the petition. The agency will seek to issue either notice within 120 days after receipt of a complete petition. However, this time period may be extended by any time period during which the agency is awaiting additional information it requests from the petitioner or is awaiting a requested demonstration. The agency contemplates a 30 to 60 day comment period for any Notice of Proposed Rulemaking, and will endeavor to issue a final rule within 60 days thereafter.

PART 571-FEDERAL MOTOR VEHICLE SAFETY STANDARDS

4. The authority citation for Part 571 of Title 49 continues to read as follows:

Authority: 49 U.S.C. 322, 30111, 30115, 30117, and 30166; delegation of authority at 49 CFR 1.50.

5. Section 571.208 is amended as follows:

A. By revising S3, S4.5.1 heading, S4.5.1(b)(1), S4.5.1(b)(2), S4.5.1(e), S4.5.1(f), S4.5.4, S5, S5.1, S6.1, S6.2, 6.4, S8.1.5, S10.6.1.1, S13 and S13.1;

B. By removing S4.5.5;

C. By adding S4.1.5.4, S4.2.6.3, S4.7, S4.8, S4.9, S4.10, S4.11, S4.12, S4.13, S5.1.1, S5.1.2, S6.6, S6.7, S14 through S29.3(b);

D. By adding the heading "Figure to §571.208" at the end of the section and moving figures 2 through 7 to follow this heading (figure 1 is reserved); and

E. By adding new figures 8, 9 and 10 in numerical order, and Appendix A after the figures, to read as follows:

§571.208 Standard No. 208; Occupant crash protection.

* * * * *

S3. Application.

(a) This standard applies to passenger cars, multipurpose passenger vehicles, trucks, and buses. In addition, S9, Pressure vessels and explosive devices, applies to vessels designed to contain a pressurized fluid or gas, and to explosive devices, for use in the above types of motor vehicles as part of a system designed to provide protection to occupants in the event of a crash.

(b) Notwithstanding any language to the contrary, any vehicle manufactured after March 19, 1997, and before September 1, 2006, that is subject to a dynamic crash test requirement conducted with unbelted dummies may meet the requirements specified in S5.1.2(a)(1), S5.1.2(a)(2), or S13 instead of the applicable unbelted requirement, unless the vehicle is certified to meet the requirements specified in S14.5, S15, S17, S19, S21, S23, and S25.

(c) For vehicles which are certified to meet the requirements specified in S13 instead of the otherwise applicable dynamic crash test requirement conducted with unbelted dummies, compliance with S13 shall, for purposes of Standards No. 201, 203 and 209, be deemed as compliance with the unbelted frontal barrier requirements of S5.1.2.

* * * * *

S4.1.5.4 Passenger cars certified to S14. Each passenger car certified to S14 shall, at each front outboard designated seating position, meet the applicable frontal crash protection requirements of S5.1.2(b) by means of an inflatable restraint system that requires no action by vehicle occupants.

* * * * *

S4.2.6.3 Trucks, buses, and multipurpose passenger vehicles certified to S14. Each truck, bus, or multipurpose passenger vehicle with a GVWR of 3,855 kg (8,500 lb) or less and an unloaded vehicle weight of 2,495 kg (5,500 lb) or less certified to S14 shall, at each front outboard designated seating position, meet the applicable frontal crash protection requirements of S5.1.2(b) by means of an inflatable restraint system that requires no action by vehicle occupants.

* * * * *

S4.5.1 Labeling and owner's manual information.

* * * * *

(b) * * *

(1) Except as provided in S4.5.1(b)(2), each vehicle shall have a label permanently affixed to either side of the sun visor, at the manufacturer's option, at each front outboard seating position that is equipped with an inflatable restraint. The label shall conform in content to the label shown in either Figure 6a or 6b of this standard, as appropriate, and shall comply with the requirements of S4.5.1(b)(1)(i) through S4.5.1(b)(1)(iv).

(i) The heading area shall be yellow with the word "WARNING" and the alert symbol in black.

(ii) The message area shall be white with black text. The message area shall be no less than 30 cm^2 (4.7 in').

(iii) The pictogram shall be black with a red circle and slash on a white background. The pictogram shall be no less than 30 mm (1.2 in) in diameter.

(iv) If the vehicle does not have a back seat, the label shown in Figure 6a or 6b may be modified by omitting the statement: "The BACK SEAT is the SAFEST place for children."

(2) Vehicles certified to meet the requirements specified in S19, S21, and S23, shall have a label permanently affixed to either side of the sun visor, at the manufacturer's option, at each front outboard seating position that is equipped with an inflatable restraint. The label shall conform in content to the label shown in Figure 8 of this standard and shall comply with the requirements of S4.5.1(b)(2)(i) through S4.5.1(b)(2)(iv).

(i) The heading area shall be yellow with the word "WARNING" and the alert symbol in black.

(ii) The message area shall be white with black text. The message area shall be no less than 30 cm* (4.7 in^2).

(iii) The pictogram shall be black on a white background. The pictogram shall, be no less than 30 mm (1.2 in) in length.

(iv) If the vehicle does not have a back seat, the label shown in Figure 8 may be modified by omitting the statement: "The BACK SEAT is the SAFEST place for CHILDREN."

* * * * *

(e) Label on the dashboard.

(1) Except as provided in S4.5.1(e)(2), each vehicle that is equipped with an inflatable restraint for the passenger position shall have a label attached to a location on the dashboard or the steering wheel hub that is clearly visible from all front seating positions. The label need not be permanently affixed to the vehicle. This label shall conform in content to the label shown in Figure 7 of this standard, and shall comply with the requirements of S4.5.1 (e)(l)(i) through S4.5.1(e)(1)(iii).

(i) The heading area shall be yellow with the word "WARNING" and the alert symbol in

black.

(ii) The message area shall be white with black text. The message area shall be no less than 30 cm^2 (4.7 in').

(iii) If the vehicle does not have a back seat, the label shown in Figure 7 may be modified by omitting the statement: "The back seat is the safest place for children 12 and under."

(2) Vehicles certified to meet the requirements specified in S19, S21, and S23, that are equipped with an inflatable restraint for the passenger position shall have a label attached to a location on the dashboard or the steering wheel hub that is clearly visible from all front seating positions. The label need not be permanently affixed to the vehicle. This label shall conform in content to the label shown in Figure 9 of this standard, and shall comply with the requirements of S4.5.1(e)(2)(i) through S4.5.1(e)(2)(iii).

(i) The heading area shall be yellow with black text.

(ii) The message area shall be white with black text. The message area shall be no less than 30 cm^2 (4.7 in?).

(iii) If the vehicle does not have a back seat, the label shown in Figure 9 may be modified by omitting the statement: "The back seat is the safest place for children."

(f) Information to appear in owner's manual.

(1) The owner's manual for any vehicle equipped with an inflatable restraint system shall include an accurate description of the vehicle's air bag system in an easily understandable format. The owner's manual shall include a statement to the effect that the vehicle is equipped with an air bag and lap/shoulder belt at both front outboard seating positions, and that the air bag is a supplemental restraint at those seating positions. The information shall emphasize that all

occupants, including the driver, should always wear their seat belts whether or not an air bag is also provided at their seating position to minimize the risk of severe injury or death in the event of a crash. The owner's manual shall also provide any necessary precautions regarding the proper positioning of occupants, including children, at seating positions equipped with air bags to ensure maximum safety protection for those occupants. The owner's manual shall also explain that no objects should be placed over or near the air bag on the instrument panel, because any such objects could cause harm if the vehicle is in a crash severe enough to cause the air bag to inflate.

(2) For any vehicle certified to meet the requirements specified in S14.5, S15, S17, S19, S21, S23, and S25, the manufacturer shall also include in the vehicle's owner's manual a discussion of the advanced passenger air bag system installed in the vehicle. The discussion shall explain the proper functioning of the advanced air bag system and shall provide a summary of the actions that may affect the proper functioning of the system. The discussion shall include, at a minimum, accurate information on the following topics:

(i) a presentation and explanation of the main components of the advanced passenger air bag system.

(ii) an explanation of how the components function together as part of the advanced passenger air bag system.

(iii) the basic requirements for proper operation, including an explanation of the actions that may affect the proper functioning of the system.

(iv) a complete description of the passenger air bag suppression system installed in the vehicle, including a discussion of any suppression zone.

(v) an explanation of the interaction of the advanced passenger air bag system with other

vehicle components, such as seat belts, seats or other components.

(vi) a summary of the expected outcomes when child restraint systems, children and small teenagers or adults are both properly and improperly positioned in the passenger seat, including cautionary advice against improper placement of child restraint systems.

(vii) a discussion of the telltale light, specifying its location in the vehicle and explaining when the light is illuminated.

(viii) information on how to contact the vehicle manufacturer concerning modifications for persons with disabilities that may affect the advanced air bag system.

* * * * *

S4.5.4 Passenger air bag manual cut-off device. Passenger cars, trucks, buses, and multipurpose passenger vehicles manufactured before September 1, 2012 may be equipped with a device that deactivates the air bag installed at the right front outboard seating position in the vehicle, if all the conditions in S4.5.4.1 through S4.5.4.4 are satisfied.

* * * * *

S4.7 Incorporation by reference. Society of Automotive Engineers (SAE) Recommended Practice J211/1 rev. Mar 95, "Instrumentation for Impact Test - Part 1 - Electronic Instrumentation," (SAE J211/1 rev. Mar 95) is incorporated by reference in sections S4.13, S6.6, S13.1, S15.3.6, S19.4.4, S21.5.5, S23.5.5, and S25.4, Department of Defense MIL-S-13192P, 1988, "Military Specification, Shoes, Men's, Dress, Oxford", Amendment 1, October 14, 1994 (MIL-S-13192P) is incorporated by reference in section S8.1.8, and Department of Defense MIL-S-21711E, 1982, "Military Specification, Shoes, Women's", Amendment 2, October 14, 1994 (MIL-S-21711E) is incorporated by reference in section S16.2.5, and are thereby made part of

this standard. The Director of the Federal Register approved the material incorporated by reference in accordance with 5 U.S.C. 552 (a) and 1 CFR Part 51. A copy of SAE J211/1 rev. Mar 95 may be obtained from SAE at the Society of Automotive Engineers, Inc., 400 Commonwealth Drive, Warrendale, PA 15096. A copy of SAE J21 l/l rev. Mar 95 and copies of MIL-S-13192P and MIL-S-21711E may be inspected at NHTSA's technical reference library, 400 Seventh Street, S.W., Room 5109, Washington, DC, or at the Office of the Federal Register, 800 North Capitol Street, N.W., Suite 700, Washington, DC.

S4.8 Selection of compliance options. Where manufacturer options are specified, the manufacturer shall select the option by the time it certifies the vehicle and may not thereafter select a different option for the vehicle. Each manufacturer shall, upon request from the National Highway Traffic Safety Administration, provide information regarding which of the compliance options it has selected for a particular vehicle or make/model.

S4.9 Values and tolerances. Wherever a range of values or tolerances are specified, requirements shall be met at all values within the range of values or tolerances. With respect to the positioning of anthropomorphic dummies, torso and spine angle tolerances shall be ± 2 degrees unless otherwise stated, and leg, thigh, foot, and arm angle tolerances shall be ± 5 degrees unless otherwise stated.

S4.10 Metric values. Specifications and requirements are given in metric units with English units provided for reference. The metric values are controlling.

S4.11 Test duration for purpose of measuring injury criteria.

(a) For all barrier crashes, the injury criteria specified in this standard shall be met when calculated based on data recorded for 300 milliseconds after the vehicle strikes the barrier. For

low risk deployment tests, the injury criteria shall be met when calculated based on data recorded for 300 milliseconds after the air bag is signaled to deploy.

(b) The requirements for dummy containment shall continue until both the vehicle and the dummies have ceased moving.

S4.12 Suppression systems that do not detect dummies. For vehicles with occupant sensing systems that recognize humans and not dummies, such that the air bag or bags would not function in crash tests, the manufacturer shall provide NHTSA with information and equipment necessary to circumvent the suppression system for the crash test such that the restraint system operates as if 5th percentile adult female humans and 50th percentile adult male humans are seated in the vehicle.

S4.13 Data channels. All data channels used in injury criteria calculations shall be filtered using a phaseless digital filter, such as the Butterworth four-pole phaseless digital filter specified in Appendix C of SAE J211/1, rev. Mar 95, incorporated by reference in S4.7.

* * * * *

S5 Occupant crash protection requirements for the 50th percentile adult male dummy.

S5.1 Frontal barrier crash test.

S5.1.1 Belted test.

(a) Vehicles not certified to S14. Impact a vehicle traveling longitudinally forward at any speed, up to and including 48 km/h (30 mph), into a fixed rigid barrier that is perpendicular to the line of travel of the vehicle, and at any angle up to 30 degrees in either direction from the perpendicular to the line of travel of the vehicle, under the applicable conditions of S8 and S10. The test dummy specified in S8.1.8 placed in each front outboard designated seating position shall

meet the injury criteria of S6.1, S6.2(a), S6.3, S6.4(a), and S6.5 of this standard.

(b) Vehicles certified to S14.

(1) Vehicles certified to S14.1 or S14.2. Impact a vehicle traveling longitudinally forward at any speed, up to and including 48 km/h (30 mph), into a fixed rigid barrier that is perpendicular to the line of travel of the vehicle under the applicable conditions of S8 and S10. The test dummy specified in S8.1.8 placed in each front outboard designated seating position shall meet the injury criteria of S6.1, S6.2(b), S6.3, S6.4(b), S6.5, and S6.6 of this standard.

(2) Vehicles certified to S14.3 or S14.4. Impact a vehicle traveling longitudinally forward at any speed, up to and including 56 km/h (35 mph), into a fixed rigid barrier that is perpendicular to the line of travel of the vehicle under the applicable conditions of S8 and S10. The test dummy specified in S8.1.8 placed in each front outboard designated seating position shall meet the injury criteria of S6.1, S6.2(b), S6.3, S6.4(b), S6.5, and S6.6 of this standard.

S5.1.2 Unbelted test.

(a) Vehicles not certified to the requirements of S13 or S14. At the manufacturer's option, either one of the following unbelted tests shall be met:

(1) Impact a vehicle traveling longitudinally forward at any speed up to and including 48 km/h (30 mph), into a fixed rigid barrier that is perpendicular to the line of travel of the vehicle, and at any angle up to 30 degrees in either direction from the perpendicular to the line of travel of the vehicle, under the applicable conditions of S8 and S10, excluding S10.7, S10.8, and S10.9. The test dummy specified in S8.1.8 placed in each front outboard designated seating position shall meet the injury criteria of S6.1, S6.2(a), S6.3, S6.4(a), and S6.5 of this standard.

(2) Impact a vehicle traveling longitudinally forward at any speed between 32 km/h (20

mph) and 40 km/h (25 mph), inclusive, into a fixed rigid barrier that is perpendicular to the line of travel of the vehicle, and at any angle up to 30 degrees in either direction from the perpendicular to the line of travel of the vehicle, under the applicable conditions of S8 and S10, excluding S10.7, S10.8, and S10.9. The test dummy specified in S8.1.8 placed in each front outboard designated seating position shall meet the injury criteria of S6.1, S6.2(b), S6.3, S6.4(b), S6.5, and S6.6 of this standard.

(b) Vehicles certified to the requirements of S14. Impact a vehicle traveling longitudinally forward at any speed between 32 km/h (20 mph) and 40 km/h (25 mph), inclusive, into a fixed rigid barrier that is perpendicular to the line of travel of the vehicle, and at any angle up to 30 degrees in either direction from the perpendicular to the line of travel of the vehicle, under the applicable conditions of S8 and S10, excluding S10.7, S10.8, and S10.9. The test dummy specified in S8.1.8 placed in each front outboard designated seating position shall meet the injury criteria of S6.1, S6.2(b), S6.3, S6.4(b), S6.5, and S6.6 of this standard.

* * * * *

S6.1 All portions of the test dummy shall be contained within the outer surfaces of the vehicle passenger compartment.

S6.2 Head injury criteria.

(a) (1) For any two points in time, t_1 and t_2, during the event which are separated by not more than a 36 millisecond time interval and where t_1 is less than t_2, the head injury criterion (HIC_{36}) shall be determined using the resultant head acceleration at the center of gravity of the dummy head, a_r, expressed as a multiple of g (the acceleration of gravity) and shall be calculated using the expression:

$$\left[\frac{1}{(t_2 - t_1)}\int_{t_1}^{t_2} a_r \, dt\right]^{2.5} (t_2 - t_1)$$

(2) The maximum calculated HIC_{36} value shall not exceed 1,000.

(b)(l) For any two points in time, t_1 and t_2, during the event which are separated by not more than a 15 millisecond time interval and where t_1 is less than t_2, the head injury criterion (HIC_{15}) shall be determined using the resultant head acceleration at the center of gravity of the dummy head, a_r, expressed as a multiple of g (the acceleration of gravity) and shall be calculated using the expression:

$$\left[\frac{1}{(t_2 - t_1)}\int_{t_1}^{t_2} a_r \, dt\right]^{2.5} (t_2 - t_1)$$

(2) The maximum calculated HIC_{15} value shall not exceed 700.

* * * * *

S6.4 Chest deflection.

(a) Compressive deflection of the sternum relative to the spine shall not exceed 76 mm (3.0 in).

(b) Compressive deflection of the sternum relative to the spine shall not exceed 63 mm (2.5 in).

* * * * *

S6.6 Neck injury. When measuring neck injury, each of the following injury criteria shall be met.

(a) Nij.

(1) The shear force (Fx), axial force (Fz), and bending moment (My) shall be measured by

the dummy upper neck load cell for the duration of the crash event as specified in S4.10. Shear force, axial force, and bending moment shall be filtered for Nij purposes at SAE J21 l/l rev. Mar 95 Channel Frequency Class 600 (see S4.7).

(2) During the event, the axial force (Fz) can be either in tension or compression while the occipital condyle bending moment (Mocy) can be in either flexion or extension. This results in four possible loading conditions for Nij: tension-extension (Nte), tension-flexion (Ntf), compression-extension (Nce), or compression-flexion (Ncf).

(3) When calculating Nij using the equation in S6.6(a)(4), the critical values, Fzc and Myc, are:

(i) Fzc = 6806 N (1530 lbf) when Fz is in tension

(ii) Fzc = 6160 N (1385 lbf) when Fz is in compression

(iii) Myc = 3 10 Nm (229 lbf-ft) when a flexion moment exists at the occipital condyle

(iv) Myc = 135 Nm (100 lbf-ft) when an extension moment exists at the occipital condyle.

(4) At each point in time, only one of the four loading conditions occurs and the Nij value corresponding to that loading condition is computed and the three remaining loading modes shall be considered a value of zero. The expression for calculating each Nij loading condition is given by:

$$Nij = (Fz / Fzc) + (Mocy / Myc)$$

(5) None of the four Nij values shall exceed 1 .0 at any time during the event.

(b) Peak tension. Tension force (Fz), measured at the upper neck load cell, shall not exceed 4170 N (937 lbf) at any time.

(c) Peak compression. Compression force (Fz), measured at the upper neck load cell, shall

not exceed 4000 N (899 lbf) at any time.

S6.7 Unless otherwise indicated, instrumentation for data acquisition, data channel frequency class, and moment calculations are the same as given for the 49 CFR Part 572, Subpart E Hybrid III test dummy.

* * * * *

S8.1.5 Movable vehicle windows and vents are placed in the fully closed position, unless the vehicle manufacturer chooses to specify a different adjustment position prior to the time it certifies the vehicle.

* * * * *

S10.6.1.1 If the vehicle has an adjustable accelerator pedal, adjust it to the full forward position. Rest the right foot of the test dummy on the undepressed accelerator pedal with the rearmost point of the heel on the floor pan in the plane of the pedal. If the foot cannot be placed on the accelerator pedal, set it initially perpendicular to the lower leg and then place it as far forward as possible in the direction of the pedal centerline with the rearmost point of the heel resting on the floor pan. If the vehicle has an adjustable accelerator pedal and the right foot is not touching the accelerator pedal when positioned as above, move the pedal rearward until it touches the right foot. If the accelerator pedal still does not touch the foot in the full rearward position, leave the pedal in that position.

S13 Alternative unbelted test available, under S3(b) of this standard, for certain vehicles manufactured before September 1, 2006.

S13.1 Instrumentation for Impact Test - Part 1 - Electronic Instrumentation. Under the applicable conditions of S8, mount the vehicle on a dynamic test platform at the vehicle attitude

set forth in S13.3, so that the longitudinal center line of the vehicle is parallel to the direction of the test platform travel and so that movement between the base of the vehicle and the test platform is prevented. The test platform is instrumented with an accelerometer and data processing system having a frequency response of 60 channel class as specified in SAE J211/1 rev. Mar 95, (see S4.7). The accelerometer sensitive axis is parallel to the direction of test platform travel. The test is conducted at a velocity change approximating 48 km/h (30 mph) with acceleration of the test platform such that all points on the crash pulse curve within the corridor identified in Figure 6 are covered. An inflatable restraint is to be activated at 20 ms +/- 2 ms from the time that 0.5 g is measured on the dynamic test platform. The test dummy specified in S8.1.8, placed in each front outboard designated seating position as specified in S10, excluding S10.7, S10.8, and S10.9, shall meet the injury criteria of S6.1, S6.2(a), S6.3, S6.4(a), S6.5, and S13.2 of this standard.

* * * * *

S14 Advanced air bag requirements for passenger cars and for trucks, buses, and multipurpose passenger vehicles with a GVWR of 3,855 kg (8500 pounds) or less and an unloaded vehicle weight of 2,495 kg (5500 pounds) or less, except for walk-in van-type trucks or vehicles designed to be sold exclusively to the U.S. Postal Service.

S14.1 Vehicles manufactured on or after September 1, 2003, and before Sentember 1, 2006.

(a) For vehicles manufactured for sale in the United States on or after September 1, 2003, and before September 1, 2006, a percentage of the manufacturer's production, as specified in S14.1.1, shall meet the requirements specified in S14.5.1(a), S14.5.2, S15.1, S15.2, S17, S19, S21, S23, and S25 (in addition to the other requirements specified in this standard).

(b) Manufacturers that sell two or fewer carlines, as that term is defined at 49 CFR 583.4, in the United States may, at the option of the manufacturer, meet the requirements of this paragraph instead of paragraph (a) of this section. Each vehicle manufactured on or after September 1, 2004, and before September 1, 2006, shall meet the requirements specified in S14.5.1(a), S14.5.2, S15.1, S15.2, S17, S19, S21, S23, and S25 (in addition to the other requirements specified in this standard).

(c) Vehicles that are manufactured in two or more stages or that are altered (within the meaning of 49 CFR 567.7) after having previously been certified in accordance with Part 567 of this chapter are not subject to the requirements of S14.1.

(d) Vehicles that are manufactured by a manufacturer that produces fewer than 5,000 vehicles worldwide annually are not subject to the requirements of S14.1.

S14.1.1 Phase-in schedule.

S14.1.1.1 Vehicles manufactured on or after Sentember 1, 2003, and before September 1, 2004. Subject to S14.1.2(a), for vehicles manufactured by a manufacturer on or after September 1, 2003, and before September 1, 2004, the amount of vehicles complying with S14.5.1(a), S14.5.2, S15.1, S15.2, S17, S19, S21, S23, and S25, shall be not less than 35 percent of:

(a) If the manufacturer has manufactured vehicles for sale in the United States during both of the two production years prior to September 1, 2003, the manufacturer's average annual production of vehicles manufactured on or after September 1, 2001, and before September 1, 2004, or

(b) The manufacturer's production on or after September 1, 2003, and before September 1, 2004.

S14.1.1.2 Vehicles manufactured on or after September 1, 2004, and before September 1, 2005. Subject to S14.1.2(b), for vehicles manufactured by a manufacturer on or after September 1, 2004, and before September 1, 2005, the amount of vehicles complying with S14.5.1(a), S14.5.2, S15.1, S15.2, S17, S19, S21, S23, and S25 shall be not less than 65 percent of:

(a) If the manufacturer has manufactured vehicles for sale in the United States during both of the two production years prior to September 1, 2004, the manufacturer's average annual production of vehicles manufactured on or after September 1, 2002, and before September 1, 2005, or

(b) The manufacturer's production on or after September 1, 2004, and before September 1, 2005.

S14.1.1.3 Vehicles manufactured on or after September 1, 2005, and before September 1, 2006. Subject to S14.1.2(c), for vehicles manufactured by a manufacturer on or after September 1, 2005, and before September 1, 2006, the amount of vehicles complying with S14.5.1(a), S14.5.2, S15.1, S15.2, S17, S19, S21, S23, and S25 shall be 100 percent of the manufacturer's production during that period.

S14.1.2 Calculation of complying vehicles.

(a) For the purposes of complying with S14.1.1.1, a manufacturer may count a vehicle if it is manufactured on or after [insert the date 30 days after publication], but before September 1, 2004.

(b) For purposes of complying with S14.1.1.2, a manufacturer may count a vehicle if it:

(1) Is manufactured on or after [insert the date 30 days after publication], but before September 1, 2005, and

(2) Is not counted toward compliance with S14.1.1.1.

(c) For purposes of complying with S14.1.1.3, a manufacturer may count a vehicle if it:

(1) Is manufactured on or after [insert the date 30 days after publication], but before September 1, 2006, and

(2) Is not counted toward compliance with S14.1.1.1 or S14.1.1.2.

S14.1.3 Vehicles produced by more than one manufacturer.

S14.1.3.1 For the purpose of calculating average annual production of vehicles for each manufacturer and the number of vehicles manufactured by each manufacturer under S14.1.1, a vehicle produced by more than one manufacturer shall be attributed to a single manufacturer as follows, subject to S14.1.3.2.

(a) A vehicle that is imported shall be attributed to the importer.

(b) A vehicle manufactured in the United States by more than one manufacturer, one of which also markets the vehicle, shall be attributed to the manufacturer that markets the vehicle.

S14.1.3.2 A vehicle produced by more than one manufacturer shall be attributed to any one of the vehicle's manufacturers specified by an express written contract, reported to the National Highway Traffic Safety Administration under 49 CFR Part 585, between the manufacturer so specified and the manufacturer to which the vehicle would otherwise be attributed under S14.1.3.1.

S14.2 Vehicles manufactured on or after September 1, 2006. Each vehicle shall meet the requirements specified in S14.5.1(a), S14.5.2, S15.1, S15.2, S17, S19, S21, S23, and S25 (in addition to the other requirements specified in this standard).

S14.3 Vehicles manufactured on or after September 1, 2007, and before September 1,

2010.

(a) For vehicles manufactured for sale in the United States on or after September 1, 2007, and before September 1, 2010, a percentage of the manufacturer's production, as specified in S14.3.1, shall meet the requirements specified in S14.5.1(b), S14.5.2, S15.1, S15.2, S17, S19, S21, S23, and S25 (in addition to the other requirements specified in this standard).

(b) Manufacturers that sell two or fewer carlines, as that term is defined at 49 CFR 583.4, in the United States may, at the option of the manufacturer, meet the requirements of this paragraph instead of paragraph (a) of this section. Each vehicle manufactured on or after September 1, 2007, and before September 1, 2010, shall meet the requirements specified in S14.5.1(b), S14.5.2, S15.1, S15.2, S17, S19, S21, S23, and S25 (in addition to the other requirements specified in this standard).

(c) Vehicles that are manufactured in two or more stages or that are altered (within the meaning of 49 CFR 567.7) after having previously been certified in accordance with Part 567 of this chapter are not subject to the requirements of S14.3.

(d) Vehicles that are manufactured by a manufacturer that produces fewer than 5,000 vehicles worldwide annually are not subject to the requirements of S14.3.

S14.3.1 Phase-in schedule.

S14.3.1.1 Vehicles manufactured on or after September 1, 2007, and before September 1, 2008. Subject to S14.3.2(a), for vehicles manufactured by a manufacturer on or after September 1, 2007, and before September 1, 2008, the amount of vehicles complying with S14.5.1(b), S14.5.2, S15.1, S15.2, S17, S19, S21, S23, and S25, shall be not less than 35 percent of:

(a) If the manufacturer has manufactured vehicles for sale in the United States during both

of the two production years prior to September 1, 2007, the manufacturer's average annual production of vehicles manufactured on or after September 1, 2005, and before September 1, 2008, or

(b) The manufacturer's production on or after September 1, 2007, and before September 1, 2008.

S14.3.1.2 Vehicles manufactured on or after September 1, 2008, and before September 1, 2009. Subject to S14.3.2(b), for vehicles manufactured by a manufacturer on or after September 1, 2008, and before September 1, 2009, the amount of vehicles complying with S14.5.1(b), S14.5.2, S15.1, S15.2, S17, S19, S21, S23, and S25 shall be not less than 65 percent of:

(a) If the manufacturer has manufactured vehicles for sale in the United States during both of the two production years prior to September 1, 2008, the manufacturer's average annual production of vehicles manufactured on or after September 1, 2006 and before September 1, 2009, or

(b) The manufacturer's production on or after September 1, 2008, and before September 1, 2009.

S 14.3.1.3 Vehicles manufactured on or after September 1, 2009, and before September 1, 2010. Subject to S14.3.2(c), for vehicles manufactured by a manufacturer on or after September 1, 2009, and before September 1, 2010, the amount of vehicles complying with S14.5.1(b), S14.5.2, S15.1, S15.2, S17, S19, S21, S23, and S25 shall be 100 percent of the manufacturer's production during that period.

S14.3.2 Calculation of complying vehicles.

(a) For the purposes of complying with S14.3.1.1, a manufacturer may count a vehicle if it

is manufactured on or after September 1, 2006, but before September 1, 2008.

(b) For purposes of complying with S14.3.1.2, a manufacturer may count a vehicle if it:

(1) Is manufactured on or after September 1, 2006, but before September 1, 2009, and

(2) Is not counted toward compliance with S14.3.1.1.

(c) For purposes of complying with S14.3.1.3, a manufacturer may count a vehicle if it:

(1) Is manufactured on or after September 1, 2006, but before September 1, 2010, and

(2) Is not counted toward compliance with S14.3.1.1 or S14.3.1.2.

S14.3.3 Vehicles produced by more than one manufacturer.

S14.3.3.1 For the purpose of calculating average annual production ofvehicles for each manufacturer and the number of vehicles manufactured by each manufacturer under S14.3.1, a vehicle produced by more than one manufacturer shall be attributed to a single manufacturer as follows, subject to S14.3.3.2.

(a) A vehicle that is imported shall be attributed to the importer.

(b) A vehicle manufactured in the United States by more than one manufacturer, one of which also markets the vehicle, shall be attributed to the manufacturer that markets the vehicle.

S14.3.3.2 A vehicle produced by more than one manufacturer shall be attributed to any one of the vehicle's manufacturers specified by an express written contract, reported to the National Highway Traffic Safety Administration under 49 CFR Part 585, between the manufacturer so specified and the manufacturer to which the vehicle would otherwise be attributed under S14.3.3.1.

S14.4 Vehicles manufactured on or after September 1, 2010. Each vehicle shall meet the requirements specified in S14.5.1(b), S14.5.2, S15.1, S15.2, S17, S19, S21, S23, and S25 (in

addition to the other requirements specified in this standard).

S14.5 Barrier test requirements using 50th percentile adult male dummies.

S14.5.1 Rigid barrier belted test.

(a) Each vehicle that is certified as complying with S14.1 or S14.2 shall, at each front outboard designated seating position, meet the injury criteria specified in S6.1, S6.2(b), S6.3, S6.4(b), S6.5, and S6.6 when tested under S5.1.1(b)(1).

(b) Each vehicle that is certified as complying with S14.3 or S14.4 shall, at each front outboard designated seating position, meet the injury criteria specified in S6.1, S6.2(b), S6.3, S6.4(b), S6.5, and S6.6 when tested under S5.1.1(b)(2).

S14.5.2 Rigid barrier unbelted test. Each vehicle that is certified as complying with S14 shall, at each front outboard designated seating position, meet the injury criteria specified in S6.1, S6.2(b), S6.3, S6.4(b), S6.5, and S6.6 when tested under S5.1.2(b).

S15 Rigid barrier test requirements using 5th percentile adult female dummies.

S15.1 Belted test. Each vehicle that is certified as complying with S14 shall, at each front outboard designated seating position, meet the injury criteria specified in S15.3 of this standard when the vehicle is crash tested in accordance with the procedures specified in S16.1(a) of this standard with the anthropomorphic test devices restrained by a Type 2 seat belt assembly.

S15.2 Unbelted test. Each vehicle that is certified as complying with S14 shall, at each front outboard designated seating position, meet the injury criteria specified in S15.3 of this standard when the vehicle is crash tested in accordance with the procedures specified in S16.1(b) of this standard with the anthropomorphic test devices unbelted.

S15.3 Injury criteria for the 49 CFR Part 572, Subpart 0 Hybrid III 5th percentile female

test dummy.

S15.3.1 All portions of the test dummy shall be contained within the outer surfaces of the vehicle passenger compartment.

S15.3.2 Head injury criteria.

(a) For any two points in time, t_1 and t_2, during the event which are separated by not more than a 15 millisecond time interval and where t_1 is less than t_2, the head injury criterion (HIC_{15}) shall be determined using the resultant head acceleration at the center of gravity of the dummy head, a_r, expressed as a multiple of g (the acceleration of gravity) and shall be calculated using the expression:

$$\left[\frac{1}{(t_2 - t_1)}\int_{t_1}^{t_2} a_r \, dt\right]^{2.5} (t_2 - t_1)$$

(b) The maximum calculated HIC_{15} value shall not exceed 700.

S15.3.3 The resultant acceleration calculated from the output of the thoracic instrumentation shall not exceed 60 g's, except for intervals whose cumulative duration is not more than 3 milliseconds.

S15.3.4 Compression deflection of the sternum relative to the spine, as determined by instrumentation, shown shall not exceed 52 mm (2.0 in).

S15.3.5 The force transmitted axially through each femur shall not exceed 6805 N (1530 lb).

S15.3.6 Neck injury. When measuring neck injury, each of the following injury criteria shall be met.

(a) Nij.

(1) The shear force (Fx), axial force (Fz), and bending moment (My) shall be measured by the dummy upper neck load cell for the duration of the crash event as specified in S4.10. Shear force, axial force, and bending moment shall be filtered for Nij purposes at SAE J211/1 rev. Mar95 Channel Frequency Class 600 (see S4.7).

(2) During the event, the axial force (Fz) can be either in tension or compression while the occipital condyle bending moment (Mocy) can be in either flexion or extension. This results in four possible loading conditions for Nij: tension-extension (Nte), tension-flexion (Ntf), compression-extension (Nce), or compression-flexion (Ncf).

(3) When calculating Nij using equation S15.3.6(a)(4), the critical values, Fzc and Myc, are:

(i) Fzc = 4287 N (964 lbf) when Fz is in tension

(ii) Fzc = 3880 N (872 lbf) when Fz is in compression

(iii) Myc = 155 Nm (114 lbf-ft) when a flexion moment exists at the occipital condyle

(iv) Myc = 67 Nm (49 lbf-ft) when an extension moment exists at the occipital condyle.

(4) At each point in time, only one of the four loading conditions occurs and the Nij value corresponding to that loading condition is computed and the three remaining loading modes shall be considered a value of zero. The expression for calculating each Nij loading condition is given by:

$$Nij = (Fz / Fzc) + (Mocy / Myc)$$

(5) None of the four Nij values shall exceed 1.0 at any time during the event.

(b) Peak tension. Tension force (Fz), measured at the upper neck load cell, shall not exceed 2620 N (589 lbf) at any time.

(c) Peak compression. Compression force (Fz), measured at the upper neck load cell, shall

not exceed 2520 N (566 lbf) at any time.

S15.3.7 Unless otherwise indicated, instrumentation for data acquisition, data channel frequency class, and moment calculations are the same as given for the 49 CFR Part 572, Subpart 0 Hybrid III 5th percentile female test dummy.

S16. Test procedures for rigid barrier test requirements using 5th percentile adult female dummies.

S16.1 General provisions. Crash testing to determine compliance with the requirements of S15 of this standard is conducted as specified in the following paragraphs (a) and (b).

(a) Belted test. Place a 49 CFR Part 572 Subpart 0 5th percentile adult female test dummy at each front outboard seating position of a vehicle, in accordance with the procedures specified in S16.3 of this standard. Impact the vehicle traveling longitudinally forward at any speed, up to and including 48 km/h (30 mph), into a fixed rigid barrier that is perpendicular within a tolerance of ± 5 degrees to the line of travel of the vehicle under the applicable conditions of S16.2 of this standard.

(b) Unbelted test. Place a 49 CFR Part 572 Subpart 0 5th percentile adult female test dummy at each front outboard seating position of a vehicle, in accordance with the procedures specified in S16.3 of this standard, except S16.3.5. Impact the vehicle traveling longitudinally forward at any speed, from 32 km/h (20 mph) to 40 km/h (25 mph), inclusive, into a fixed rigid barrier that is perpendicular within a tolerance of ± 5 degrees to the line of travel of the vehicle under the applicable conditions of S16.2 of this standard.

S16.2 Test conditions.

S16.2.1 The vehicle, including test devices and instrumentation, is loaded as in S8.1.1.

S16.2.2 Movable vehicle windows and vents are placed in the fully closed position, unless the vehicle manufacturer chooses to specify a different adjustment position prior to the time the vehicle is certified.

S16.2.3 Convertibles and open-body type vehicles have the top, if any, in place in the closed passenger compartment configuration.

S16.2.4 Doors are fully closed and latched but not locked.

S16.2.5 The dummy is clothed in form fitting cotton stretch garments with short sleeves and above the knee length pants. A size 7 1/2W shoe which meets the configuration and size specifications of MIL-S-21711E (see S4.7) or its equivalent is placed on each foot of the test dummy.

S16.2.6 Limb joints are set at one g, barely restraining the weight of the limb when extended horizontally. Leg joints are adjusted with the torso in the supine position.

S16.2.7 Instrumentation shall not affect the motion of dummies during impact.

S16.2.8 The stabilized temperature of the dummy is at any level between 20.6° C and 22.2° C (69° F to 72° F).

S16.2.9 Steering wheel adjustment.

S16.2.9.1 Adjust a tiltable steering wheel, if possible, so that the steering wheel hub is at the geometric center of its full range of driving positions.

S16.2.9.2 If there is no setting detent at the mid position, lower the steering wheel to the detent just below the mid position.

S16.2.9.3 If the steering column is telescoping, place the steering column in the mid position. If there is no mid position, move the steering wheel rearward one position from the mid

position.

S 16.2.10 Driver and passenger seat set-up.

S16.2.10.1 Seat position adjustment.

S16.2.10.1.1 If a seat is adjustable in the fore and aft and/or vertical directions, move the seat to the fowardmost seating position and mid-height position.

S 16.2.10.1.2 Establish a reference line on the outboard side of the seat cushion in a horizontal plane.

S16.2.10.1.3 Measure and record the seat cushion angle with respect to the reference line established in S16.2.10.1.2.

S16.2.10.1.4 Adjust the seat vertically as close to the mid-height position as possible. If possible, maintain the seat cushion reference angle measured in the middle and full forward condition in S16.2.10.1.3.

S16.2.10.2 Lumbar support adjustment. Position adjustable lumbar supports so that the lumbar support is in its lowest, retracted or deflated adjustment position.

S16.2.10.3 Cushion and side bolster adjustment. Position adjustable seat cushion and seat back side bolsters so that they are in the lowest or most open adjustment position.

S16.3 Dummy seating positioning procedures. The 49 CFR Part 572 Subpart 0 5th percentile adult female test dummy is positioned as follows.

S16.3.1 General provisions and definitions.

S16.3.1.1 All angles are measured with respect to the horizontal plane.

S 16.3.1.2 The dummy's neck bracket is adjusted to align the zero degree index marks.

S 16.3.1.3 The term "midsagittal plane" refers to the vertical plane that separates the

dummy into equal left and right halves.

S16.3.1.4 The term “vertical longitudinal plane” refers to a vertical plane parallel to the vehicle’s longitudinal centerline.

S16.3.1.5 The term “vertical plane” refers to a vertical plane, not necessarily parallel to the vehicle’s longitudinal centerline.

S16.3.1.6 The term “transverse instrumentation platform” refers to the transverse instrumentation surface inside the dummy’s skull casting to which the neck load cell mounts. This surface is perpendicular to the skull cap’s machined inferior-superior mounting surface.

S16.3.1.7. The term “thigh” refers to the femur between, but not including, the knee and the pelvis.

S16.3.1.8 The term “leg” refers to the lower part of the entire leg including the knee.

S16.3.1.9 The term “foot” refers to the foot including the ankle.

S16.3.2 Driver dummy positioning.

S16.3.2.1 Driver torso/head/seat back angle positioning.

S16.3.2.1.1 Fully recline the seat back, if adjustable.

S 16.3.2.1.2 Install the dummy into the driver’s seat. If necessary, move the seat rearward to facilitate dummy installation. If the seat cushion angle automatically changes as the seat is moved from the full forward position, restore the correct seat cushion angle when measuring the pelvic angle as specified in S16.3.2.1.11.

S16.3.2.1.3 Bucket seats. Center the dummy on the seat cushion so that its midsagittal plane is vertical and coincides with the vertical longitudinal plane through the center of the seat cushion.

S16.3.2.1.4 Bench seats. Position the midsagittal plane of the dummy vertical and parallel to the vehicle's longitudinal centerline and aligned with the center of the steering wheel rim.

S16.3.2.1.5 Hold the dummy's thighs down and push rearward on the upper torso to maximize the dummy's pelvic angle.

S16.3.2.1.6 Place the legs at 90 degrees to the thighs. Push rearward on the dummy's knees to force the pelvis into the seat so there is no gap between the pelvis and the seat back or until contact occurs between the back of the dummy's calves and the front of the seat cushion such that the angle between the dummy's thighs and legs begins to change.

S16.3.2.1.7 Gently rock the upper torso relative to the lower torso laterally in a side to side motion three times through a ± 5 degree arc (approximately 5 1 mm (2 in) side to side) to reduce friction between the dummy and the seat.

S16.3.2.1.8 Before proceeding, attempt to return the seat to the full forward position if it has been moved from that location as specified in S 16.3.2.1.2. If, at any step during the seating procedure, a dummy leg contacts the vehicle interior, position the seat at the next detent where there is no contact. If the seat is a power seat, position the seat to avoid contact while assuring that there is a maximum of 5 mm (0.2 in) distance between the vehicle interior and the point on the dummy that would first contact the vehicle interior.

S16.3.2.1.9 While holding the thighs in place, rotate the seat back forward until the transverse instrumentation platform of the head is level to within ± 0.5 degrees, making sure that the pelvis does not interfere with the seat bight. Inspect the abdomen to ensure that it is properly installed.

S16.3.2.1.10 If it is not possible to achieve the head level within ± 0.5 degrees, minimize the angle.

S16.3.2.1.11 Measure and set the dummy's pelvic angle using the pelvic angle gage (drawing TE-2504, incorporated by reference in 49 CFR Part 572, Subpart O, of this chapter). The angle shall be set to 20.0 degrees ± 2.5 degrees. If this is not possible, adjust the pelvic angle as close to 20.0 degrees as possible while keeping the transverse instrumentation platform of the head as level as possible as specified in S16.3.2.1.9 and S16.3.2.1.10.

S16.3.2.1.12. If the transverse instrumentation platform of the head is still not level, adjust the seat back angle to minimize the angle as much as possible.

S16.3.2.1.13 In vehicles with a fixed seat back, adjust the lower neck bracket to level the head as much as possible.

S16.3.2.2 Driver thigh/knee/leg positioning.

S16.3.2.2.1 Rest the dummy's thighs against the seat cushion to the extent permitted by the placement of the feet in S16.3.2.3.

S16.3.2.2.2 Set the initial transverse distance between the longitudinal centerline of the dummy's knees at 160 to 170 mm (6.3 to 6.7 in), with the thighs and legs of the dummy in vertical planes.

S16.3.2.2.3. If either knee of the dummy contacts the vehicle interior, move the seat rearward to the next detent that provides clearance. If the seat is a power seat, move the seat rearward, while assuring that there is a maximum of 5 mm (0.2 in) distance between the vehicle interior and the dummy knee closest to the vehicle interior.

S16.3.2.3 Driver foot positioning.

S16.3.2.3.1 If the vehicle has an adjustable accelerator pedal, adjust it to the full forward position. Rest the right foot of the test dummy on the undepressed accelerator pedal with the rearmost point of the heel on the floor pan in the plane of the pedal. If the foot cannot be placed on the accelerator pedal, set it initially perpendicular to the lower leg and then place it as far forward as possible in the direction of the pedal centerline with the rearmost point of the heel resting on the floor pan. If the vehicle has an adjustable accelerator pedal and the right foot is not touching the accelerator pedal when positioned as above, move the pedal rearward until it touches the right foot, If the accelerator pedal still does not touch the foot in the full rearward position, leave the pedal in that position.

S16.3.2.3.2 If the ball of the foot does not contact the pedal, change the angle of the foot relative to the leg such that the toe of the foot contacts the undepressed accelerator pedal.

S16.3.2.3.3 Place the left foot on the toe board with the rearmost point of the heel resting on the floor pan as close as possible to the point of intersection of the toe board and the floor pan.

S16.3.2.3.4 If the left foot cannot be positioned on the toe board, place the foot flat on the floor pan as far forward as possible.

S16.3.2.3.5 If the left foot does not contact the floor pan, place the foot parallel to the floor and place the leg as perpendicular to the thigh as possible.

S16.3.2.4 Driver arm/hand positioning.

S16.3.2.4.1 Place the dummy's upper arms adjacent to the torso with the arm centerlines as close to vertical as possible.

S16.3.2.4.2 Place the palms of the dummy in contact with the outer part of the steering wheel rim at its horizontal centerline with the thumbs inside the steering wheel rim.

S16.3.2.4.3 If it is not possible to position the thumbs inside the steering wheel rim at its horizontal centerline, then position them above and as close to the horizontal centerline of the steering wheel rim as possible.

S16.3.2.4.4 Lightly tape the hands to the steering wheel rim so that if the hand of the test dummy is pushed upward by a force of not less than 9 N (2 lb) and not more than 22 N (5 lb), the tape releases the hand from the steering wheel rim.

S 16.3.3 Passenger dummy positioning.

S16.3.3.1 Passenger torso/head/seat back angle positioning.

S16.3.3.1.1 Fully recline the seat back, if adjustable.

S16.3.3.1.2 Place the dummy in the passenger's seat. If necessary, move the seat rearward to facilitate dummy installation. If the seat cushion angle automatically changes as the seat is moved from the full forward position, restore the correct seat cushion angle when measuring the pelvic angle in S16.3.3.1.11.

S16.3.3.1.3 Bucket seats. Center the dummy on the seat cushion so that its midsagittal plane is vertical and coincides with the vertical longitudinal plane through the center of the seat cushion.

S16.3.3.1.4 Bench seats. The midsagittal plane of the dummy shall be vertical and parallel to the vehicle's longitudinal centerline and the same distance from the vehicle's longitudinal centerline as the midsagittal plane of the driver dummy.

S16.3.3.1.5 Hold the dummy's thighs down and push rearward on the upper torso to maximize the dummy's pelvic angle.

S16.3.3.1.6 Place the legs at 90 degrees to the thighs. Push rearward on the dummy's knees to force the pelvis into the seat so there is no gap between the pelvis and the seat back or until contact occurs between the back of the dummy's calves and the front of the seat cushion such that the angle between the dummy's thighs and legs begins to change.

S16.3.3.1.7 Gently rock the upper torso relative to the lower torso laterally side to side three times through a ± 5 degree arc (approximately 5 1 mm (2 in) side to side).

S16.3.3.1.8 Before proceeding, attempt, to return the seat to the full forward position if it has been moved from that location as specified in S16.3.3.1.2. If, at any step during the seating procedure, a dummy leg contacts the vehicle interior, position the seat at the detent where there is no contact. If the seats are power seats, position the seat to avoid contact while assuring that there is a maximum of 5 mm (0.2 in) distance between the vehicle interior and the point on the dummy that would first contact the vehicle interior.

S16.3.3.1.9 While holding the thighs in place, rotate the seat back forward until the transverse instrumentation platform of the head is level to within ± 0.5 degrees, making sure that the pelvis does not interfere with the seat bight. In addition, inspect the abdomen to insure that it is properly installed.

S16.3.3.1.10 If it is not possible to orient the head level within ± 0.5 degrees, minimize the angle.

S16.3.3.1.11 Measure and set the dummy's pelvic angle using the pelvic angle gage (drawing TE-2504, incorporated by reference in 49 CFR Part 572, Subpart O, of this chapter). The angle shall be set to 20.0 degrees ± 2.5 degrees. If this is not possible, adjust the pelvic angle

as close to 20.0 degrees as possible while keeping the transverse instrumentation platform of the head as level as possible as specified in S16.3.3.1.9 and S16.3.3.1.10.

S16.3.3.1.12 If the transverse instrumentation platform of the head is still not level, adjust the seat back angle to minimize the angle as much as possible.

S16.3.3.1.13 In vehicles with a fixed seat back, adjust the lower neck bracket to level the head as much as possible.

S16.3.3.2 Passenger thigh/knee/lee positioning.

S16.3.3.2.1 Rest the dummy's thighs against the seat cushion to the extent permitted by the placement of the feet in S16.3.3.3.

S16.3.3.2.2 Set the initial transverse distance between the longitudinal centerline of the dummy's knees at 160 to 170 mm (6.3 to 6.7 in), with the thighs and legs of the dummy in vertical longitudinal planes.

S16.3.3.2.3 If either knee of the dummy is in contact with the vehicle interior, move the seat rearward to the next detent that provides clearance. If the seats are power seats, move the seat rearward for a maximum distance of 5 mm (0.2 in) between the vehicle interior and the dummy knee closest to the vehicle interior.

S16.3.3.3 Passenger foot positioning.

S16.3.3.3.1 Place the passenger's feet flat on the floor pan as far forward as possible.

S16.3.3.3.2 If either foot does not entirely contact the floor pan, place the foot parallel to the floor and place the legs as perpendicular to the thighs as possible.

S16.3.3.4 Passenger arm/hand positioning.

S16.3.3.4.1 Place the dummy's upper arms in contact with the upper seat back and adjacent to the torso.

S16.3.3.4.2 Place the palms of the dummy in contact with the outside of the thighs.

S16.3.3.4.3 Place the little fingers in contact with the seat cushion.

S16.3.4 Driver and passenger head restraint adjustment.

S16.3.4.1. Place each adjustable head restraint so that the vertical center of the head restraint is horizontally aligned with the center of gravity (CG) of the dummy head.

S16.3.4.2 If the above position is not attainable, move the vertical center of the head restraint to the closest detent below the center of the head CG.

S16.3.4.3 If the head restraint has a fore and aft adjustment, place the restraint in the forwardmost position or until contact with the head is made, whichever occurs first.

S16.3.4.4 If the head restraint has an automatic adjustment, leave it where the system positions the restraint after the dummy is placed in the seat.

S16.3.5 Driver and passenger manual belt adjustment (for tests conducted with a belted dummy)

S16.3.5.1 If an adjustable seat belt D-ring anchorage exists, place it in the manufacturer's design position for a 5th percentile adult female with the seat in the position specified in S16.2.11.1.

S16.3.5.2 Place the Type 2 manual belt around the test dummy and fasten the latch.

S16.3.5.3 Ensure that the dummy's head remains as level as possible, as specified in S16.3.2.1.9, S16.3.2.1.10, S16.3.3.1.9, and S16.3.3.1.10.

S16.3.5.4 Remove all slack from the lap belt. Pull the upper torso webbing out of the retractor and allow it to retract; repeat this operation four times. Apply a 9 N (2 lbf) to 18 N (4 lbf) tension load to the lap belt. If the belt system is equipped with a tension-relieving device, introduce the maximum amount of slack into the upper torso belt that is recommended by the manufacturer. If the belt system is not equipped with a tension-relieving device, allow the excess webbing in the shoulder belt to be retracted by the retractive force of the retractor.

S17 Offset frontal deformable barrier requirements using 5th percentile adult female test dummies.

Each vehicle that is certified as complying with S14 shall, at each front outboard designated seating position, meet the injury criteria specified in S15.3 of this standard when the vehicle is crash tested in accordance with the procedures specified in S 18 of this standard with the anthropomorphic test devices restrained by a Type 2 seat belt assembly.

S18 Test procedure for offset frontal deformable barrier requirements using 5th percentile adult female dummies.

S18.1 General provisions. Place a 49 CFR Part 572 Subpart 0 5th percentile adult female test dummy at each front outboard seating position of a vehicle, in accordance with the procedures specified in S16.3 of this standard. Impact the vehicle traveling longitudinally forward at any speed, up to and including 40 km/h (25 mph), into a fixed offset deformable barrier under the conditions and procedures specified in S18.2 of this standard, impacting only the driver side of the vehicle.

S18.2 Test conditions.

S 18.2.1 Offset frontal deformable barrier. The offset frontal deformable barrier shall conform to the specifications set forth in Subpart C of Part 587 of this chapter.

S18.2.2 General test conditions. All of the test conditions specified in S16.2 of this standard apply.

S18.2.3 Dummy seating procedures. Position the anthropomorphic test dummies as specified in S16.3 of this standard.

S18.2.4 Impact configuration. The test vehicle shall impact the barrier with the longitudinal centerline of the vehicle parallel to the line of travel and perpendicular to the barrier face within a tolerance of ± 5 degrees. The test vehicle shall be aligned so that the vehicle strikes the barrier with 40 percent overlap on the left side of the vehicle, with the vehicle's front engaging the barrier face such that the vehicle's longitudinal centerline is offset outboard of the edge of the barrier face by 10 percent of the vehicle's width ± 50 mm (2.0 in) as illustrated in Figure 10. The vehicle width is defined as the maximum dimension measured across the widest part of the vehicle, including bumpers and molding but excluding such components as exterior mirrors, flexible mud flaps, marker lamps, and dual rear wheel configurations.

S19 Requirements to provide protection for infants in rear facing and convertible child restraints and car beds.

S19.1 Each vehicle certified as complying with S 14 shall, at the option of the manufacturer, meet the requirements specified in S 19.2 or S 19.3, under the test procedures specified in S20.

S 19.2 Option 1 --Automatic suppression feature. Each vehicle shall meet the requirements specified in S19.2.1 through S19.2.3.

S19.2.1 The vehicle shall be equipped with an automatic suppression feature for the passenger air bag which results in deactivation of the air bag during each of the static tests specified in S20.2 (using the 49 CFR Part 572 Subpart R 12-month-old CRABI child dummy in any of the child restraints identified in sections B and C of Appendix A of this standard and the 49 CFR Part 572 Subpart K Newborn Infant dummy in any of the car beds identified in section A of Appendix A, as appropriate), and activation of the air bag system during each of the static tests specified in S20.3 (using the 49 CFR Part 572 Subpart 0 5th percentile adult female dummy).

S19.2.2 The vehicle shall be equipped with at least one telltale which emits light whenever the passenger air bag system is deactivated and does not emit light whenever the passenger air bag system is activated, except that the telltale(s) need not illuminate when the passenger seat is unoccupied. Each telltale:

(a) Shall emit yellow light;

(b) Shall have the identifying words “PASSENGER AIR BAG OFF” on the telltale or within 25 mm (1.0 in) of the telltale; and

(c) Shall not be combined with the readiness indicator required by S4.5.2 of this standard.

(d) Shall be located within the interior of the vehicle and forward of and above the design H-point of both the driver’s and the right front passenger’s seat in their forwardmost seating positions and shall not be located on or adjacent to a surface that can be used for temporary or permanent storage where use of the storage space could obscure the telltale from either the driver’s or right front passenger’s view.

(e) Shall be visible to the driver and right front passenger under all driving conditions. The means for providing the required visibility may be adjustable to provide two or more levels of

brightness, one of which is substantially discernable to a person, of any age, who has adapted to ambient daytime driving conditions, the other of which is substantially discernable to a driver, of any age, who has adapted to ambient nighttime driving conditions. The means for providing the required visibility may be adjustable manually or automatically, except that the telltale(s) may not be adjusted under any conditions to a level that is not visible, e.g., to the nighttime intensity during daytime driving conditions.

S19.2.3 The vehicle shall be equipped with a mechanism that indicates whether the air bag system is suppressed, regardless of whether the passenger seat is occupied. The mechanism need not be located in the occupant compartment unless it is the telltale described in S19.2.2.

S19.3 Option 2--Low risk deployment. Each vehicle shall meet the injury criteria specified in S19.4 of this standard when the passenger air bag is deployed in accordance with the procedures specified in S20.4.

S19.4 Injury criteria for the 49 CFR Part 572, Subpart R 12-month-old CRABI test dummy.

S19.4.1 All portions of the test dummy and child restraint shall be contained within the outer surfaces of the vehicle passenger compartment.

S19.4.2 Head injury criteria.

(a) For any two points in time, t_1 and t_2, during the event which are separated by not more than a 15 millisecond time interval and where t_1 is less than t_2, the head injury criterion (HIC_{15}) shall be determined using the resultant head acceleration at the center of gravity of the dummy head, a_r, expressed as a multiple of g (the acceleration of gravity) and shall be calculated using the expression:

$$\left[\frac{1}{(t_2 - t_1)}\int_{t_1}^{t_2} a_r \, dt\right]^{2.5} (t_2 - t_1)$$

(b) The maximum calculated HIC_{15} value shall not exceed 390.

S19.4.3 The resultant acceleration calculated from the output of the thoracic instrumentation shall not exceed 50 g's, except for intervals whose cumulative duration is not more than 3 milliseconds.

S19.4.4 Neck injury. When measuring neck injury, each of the following injury criteria shall be met.

(a) Nij.

(1) The shear force (Fx), axial force (Fz), and bending moment (My) shall be measured by the dummy upper neck load cell for the duration of the crash event as specified in S4.10. Shear force, axial force, and bending moment shall be filtered for Nij purposes at SAE J2 1 l/l rev. Mar95 Channel Frequency Class 600 (see S4.7).

(2) During the event, the axial force (Fz) can be either in tension or extension while the occipital condyle bending moment (Mocy) can be in either flexion or extension. This results in four possible loading conditions for Nij: tension-extension (Nte), tension-flexion (Ntf), compression-extension (Nce), or compression-flexion (Ncf).

(3) When calculating Nij using equation S19.4.4(a)(4), the critical values, Fzc and Myc, are:

(i) Fzc = 1460 N (328 lbf) when Fz is in tension

(ii) Fzc = 1460 N (328 lbf) when Fz is in compression

(iii) Myc = 43 Nm (32 lbf-ft) when a flexion moment exists at the occipital condyle

(iv) Myc = 17 Nm (13 lbf-ft) when an extension moment exists at the occipital condyle.

(4) At each point in time, only one of the four loading conditions occurs and the Nij value corresponding to that loading condition is computed and the three remaining loading modes shall be considered a value of zero. The expression for calculating each Nij loading condition is given by:

$$Nij = (Fz / Fzc) + (Mocy / Myc)$$

(5) None of the four Nij values shall exceed 1 .0 at any time during the event.

(b) Peak tension. Tension force (Fz), measured at the upper neck load cell, shall not exceed 780 N (175 lbf) at any time.

(c) Peak compression. Compression force (Fz), measured at the upper neck load cell, shall not exceed 960 N (216 lbf) at any time.

S19.4.5 Unless otherwise indicated, instrumentation for data acquisition, data channel frequency class, and moment calculations are the same as given for the 49 CFR Part 572 Subpart R 12-month-old CRABI test dummy.

S20 Test procedure for S 19.

S20.1 General provisions.

S20.1.1 Tests specifying the use of a car bed, a rear facing child restraint, or a convertible child restraint may be conducted using any such restraint listed in sections A, B, and C of Appendix A of this standard respectively. The car bed, rear facing child restraint, or convertible child restraint may be unused or have been previously used for static suppression tests only; if it has been used, there shall not be any visible damage prior to the test.

S20.1.2 Each vehicle certified to this option shall comply in tests conducted with the right front outboard seating position at the full rearward seat track position, the middle seat track position, and the full forward seat track position. If the child restraint or dummy contacts the vehicle interior, move the seat rearward to the next detent that provides clearance. If the seat is a power seat, move the seat rearward while assuring that there is a maximum of 5 mm (0.2 in) clearance. All tests are conducted with the seat height, if adjustable, in the mid-height position and with the seat back angle, if adjustable, at the manufacturer's nominal design seat back angle for a 50th percentile adult male as specified in S8.1.3.

S20.1.3 If the car bed, rear facing child restraint, or convertible child restraint is equipped with a handle, the vehicle shall comply in tests conducted with the handle at both the child restraint manufacturer's recommended position for use in vehicles and in the upright position.

S20.1.4 If the car bed, rear facing child restraint, or convertible child restraint is equipped with a sunshield, the vehicle shall comply in tests conducted with the sunshield both fully open and fully closed.

S20.1.5 The vehicle shall comply in tests with the car bed, rear facing child restraint, or convertible child restraint uncovered and in tests with a towel or blanket weighing up to 1 .0 kg (2.2 lb) placed on or over the restraint in any of the following positions:

(a) with the blanket covering the top and sides of the restraint, and

(b) with the blanket placed from the top of the vehicle's seat back to the forwardmost edge of the restraint.

S20.1.6 Except as otherwise specified, if the car bed, rear facing child restraint, or convertible child restraint has an anchorage system as specified in S5.9 of FMVSS No. 213 and is

tested in a vehicle with a right front outboard vehicle seat that has an anchorage system as specified in FMVSS No. 225, the vehicle shall comply with the belted test conditions both with the restraint anchorage system attached and unattached to the vehicle seat anchorage system and with the unbelted test conditions with the restraint anchorage system unattached to the vehicle seat anchorage system.

S20.1.7 Do not attach any tethers.

S20.2 Static tests of automatic suppression feature which shall result in deactivation of the passenger air bag. Each vehicle that is certified as complying with S 19.2 shall meet the following test requirements.

S20.2.1 Belted rear facing and convertible child restraints.

S20.2.1.1 The vehicle shall comply in tests using any child restraint specified in section B and section C of Appendix A of this standard.

S20.2.1.2 Locate a vertical plane through the longitudinal centerline of the child restraint. This will be referred to as “Plane A”.

S20.2.1.3 For bucket seats, “Plane B” refers to a vertical plane parallel to the vehicle longitudinal centerline through the geometric center of the right front outboard vehicle seat. For bench seats, “Plane B” refers to a vertical plane through the right front outboard vehicle seat parallel to the vehicle longitudinal centerline the same distance from the longitudinal centerline of the vehicle as the center of the steering wheel.

S20.2.1.4 Facing rear.

(a) The vehicle shall comply in both of the following positions, if applicable:

(1) Without attaching the child restraint anchorage system as specified in S5.9 of FMVSS No. 213 to a vehicle seat anchorage system specified in FMVSS No. 225, align the child restraint system facing rearward such that Plane A is aligned with Plane B.

(2) If the child restraint is certified to S5.9 of FMVSS No. 213, and the vehicle seat has an anchorage system as specified in FMVSS No. 225, attach the child restraint to the vehicle seat anchorage instead of aligning the planes. Do not attach the vehicle safety belt.

(b) While maintaining the child restraint positions achieved in S20.2.1.4(a), secure the child restraint by following, to the extent possible, the child restraint manufacturer's directions regarding proper installation of the restraint in the rear facing mode.

(c) Place any adjustable seat belt anchorages at the vehicle manufacturer's nominal design position for a 50th percentile adult male occupant. Cinch the vehicle belts to any tension from zero up to 134 N (30 lb) to secure the child restraint. Measure belt tension in a flat, straight section of the lap belt between the child restraint belt path and the contact point with the belt anchor or vehicle seat, on the side away from the buckle (to avoid interference from the shoulder portion of the belt).

(d) Position the 49 CFR Part 572 Subpart R 12-month-old CRABI dummy in the child restraint by following, to the extent possible, the manufacturer's instructions for seating infants provided with the child restraint.

(e) Start the vehicle engine or place the ignition in the "on" position, whichever will turn on the suppression system, and close all vehicle doors. Wait IO seconds, then check whether the air bag is deactivated.

S20.2.1.5 Facing forward (convertible restraints only).

(a) The vehicle shall comply in both of the following positions, if applicable:

(1) Without attaching the child restraint anchorage system as specified in S5.9 of FMVSS No, 213 to a vehicle seat anchorage system specified in FMVSS No. 225, align the child restraint system facing forward such that Plane A is aligned with Plane B.

(2) If the child restraint is certified to S5.9 of FMVSS No. 213, and the vehicle seat has an anchorage system as specified in FMVSS No. 225, attach the child restraint to the vehicle seat anchorage instead of aligning the planes. Do not attach the vehicle safety belt.

(b) While maintaining the child restraint positions achieved in S20.2.1.5(a), secure the child restraint by following, to the extent possible, the child restraint manufacturer's directions regarding proper installation of the restraint in the forward facing mode.

(c) Place any adjustable seat belt anchorages at the vehicle manufacturer's nominal design position for a 50th percentile adult male occupant. Cinch the vehicle belts to any tension from zero up to 134 N (30 lb) to secure the child restraint. Measure belt tension in a flat, straight section of the lap belt between the child restraint belt path and the contact point with the belt anchor or vehicle seat, on the side away from the buckle (to avoid interference from the shoulder portion of the belt).

(d) Position the 49 CFR Part 572 Subpart R 12-month-old CRABI dummy in the child restraint by following, to the extent possible, the manufacturer's instructions provided with the child restraint.

(e) Start the vehicle engine or place the ignition in the "on" position, whichever will turn on the suppression system, and close all vehicle doors. Wait 10 seconds, then check whether the air bag is deactivated.

S20.2.2 Unbelted rear facing and convertible child restraints.

S20.2.2.1 The vehicle shall comply in tests using any child restraint specified in section B and section C of Appendix A of this standard.

S20.2.2.2 Locate a vertical plane through the longitudinal centerline of the child restraint. This will be referred to as "Plane A".

S20.2.2.3 For bucket seats, "Plane B" refers to a vertical plane parallel to the vehicle longitudinal centerline through the geometric center of the right front outboard vehicle seat. For bench seats, "Plane B" refers to a vertical plane through the right front outboard seat parallel to the vehicle longitudinal centerline the same distance from the longitudinal centerline of the vehicle as the center of the steering wheel.

S20.2.2.4 Facing rear.

(a) Align the child restraint system facing rearward such that Plane A is aligned with Plane B and the child restraint is in contact with the seat back.

(b) Position the 49 CFR Part 572 Subpart R 12-month-old CRABI dummy in the child restraint by following, to the extent possible, the manufacturer's instructions provided with the child restraint.

(c) Start the vehicle engine or place the ignition in the "on" position, whichever will turn on the suppression system, and close all vehicle doors. Wait 10 seconds, then check whether the air bag is deactivated.

S20.2.2.5 Facing forward.

(a) Align the child restraint system facing forward such that Plane A is aligned with Plane B and the child restraint is in contact with the seat back.

(b) Position the 49 CFR Part 572 Subpart R 12-month-old CRABI dummy in the child restraint by following, to the extent possible, the manufacturer's instructions provided with the child restraint.

(c) Start the vehicle engine or place the ignition in the "on" position, whichever will turn on the suppression system, and close all vehicle doors. Wait 10 seconds, then check whether the air bag is deactivated.

S20.2.3 Tests with a belted car bed.

S20.2.3.1 The vehicle shall comply in tests using any car bed specified in section A of Appendix A of this standard.

S20.2.3.2 (a) Install the car bed by following, to the extent possible, the car bed manufacturer's directions regarding proper installation of the car bed.

(b) Place any adjustable seat belt anchorages at the vehicle manufacturer's nominal design position for a 50th percentile adult male occupant. Cinch the vehicle belts to any tension from zero up to 134 N (30 lb) to secure the car bed. Measure belt tension in a flat, straight section of the lap belt between the car bed belt path and the contact point with the belt anchor or vehicle seat, on the side away from the buckle (to avoid interference from the shoulder portion of the belt).

(c) Position the 49 CFR Part 572 Subpart K Newborn Infant dummy in the car bed by following, to the extent possible, the car bed manufacturer's instructions for positioning infants provided with the car bed.

(d) Start the vehicle engine or place the ignition in the "on" position, whichever will turn on the suppression system, and close all vehicle doors. Wait IO seconds, then check whether the air bag is deactivated.

S20.3 Static tests of automatic suppression feature which shall result in activation of the passenger air bag system.

S20.3.1 Each vehicle certified to this option shall comply in tests conducted with the right front outboard seating position at the full rearward seat track position, the middle seat track position, and, subject to S16.3.3.1.8, the full forward seat track position. All tests are conducted with the seat height, if adjustable, in the mid-height position.

S20.3.2 Place a 49 CFR Part 572 Subpart 0 5th percentile adult female test dummy at the right front outboard seating position of the vehicle, in accordance with procedures specified in S 16.3.3 of this standard, except as specified in S20.3.1, subject to the fore-aft seat positions in S20.3.1. Do not fasten the seat belt.

S20.3.3 Start the vehicle engine or place the ignition in the "on" position, whichever will turn on the suppression system, and then close all vehicle doors.

S20.3.4 Wait 10 seconds, then check whether the air bag system is activated.

S20.4 Low risk deployment test. Each vehicle that is certified as complying with S19.3 shall meet the following test requirements.

S20.4.1 Position the right front outboard vehicle seat in the full forward seat track position, adjust the seat height (if adjustable) to the mid-height position, and adjust the seat back (if adjustable) to the nominal design position for a 50th percentile adult male as specified in S8.1.3. If the child restraint or dummy contacts the vehicle interior, move the seat rearward to the

next detent that provides clearance. If the seat is a power seat, move the seat rearward while assuring that there is a maximum of 5 mm (0.2 in) clearance.

S20.4.2 The vehicle shall comply in tests using any child restraint specified in section B and section C of Appendix A to this standard.

S20.4.3 Locate a vertical plane through the longitudinal centerline of the child restraint. This will be referred to as “Plane A”.

S20.4.4 For bucket seats, “Plane B” refers to a vertical plane parallel to the vehicle longitudinal centerline through the geometric center of the right front outboard seat. For bench seats, “Plane B” refers to a vertical plane through the right front outboard seat parallel to the vehicle longitudinal centerline that is the same distance from the longitudinal centerline of the vehicle as the center of the steering wheel.

S20.4.5 Align the child restraint system facing rearward such that Plane A is aligned with Plane B.

S20.4.6 If the child restraint is certified to S5.9 of FMVSS No. 213, and the vehicle seat has an anchorage system as specified in FMVSS No. 225, attach the child restraint to the vehicle seat anchorage instead of aligning the planes. Do not attach the vehicle safety belt.

S20.4.7 While maintaining the child restraint position achieved in S20.4.5, secure the child restraint by following, to the extent possible, the child restraint manufacturer’s directions regarding proper installation of the restraint in the rear facing mode. Place any adjustable seat belt anchorages at the manufacturer’s nominal design position for a 50th percentile adult male occupant. Cinch the vehicle belts to any tension from zero up to 134 N (30 lb) to secure the child restraint. Measure belt tension in a flat, straight section of the lap belt between the child restraint

belt path and the contact point with the belt anchor or vehicle seat, on the side away from the buckle (to avoid interference from the shoulder portion of the belt).

S20.4.8 Position the 49 CFR Part 572 Subpart R 12-month-old CRABI dummy in the child restraint by following, to the extent possible, the manufacturer's instructions for seating infants provided with the child restraint.

S20.4.9 Deploy the right front outboard frontal air bag system. If the air bag system contains a multistage inflator, the vehicle shall be able to comply at any stage or combination of stages or time delay between successive stages that could occur in the presence of an infant in a rear facing child restraint positioned according to S20.2.1 in a rigid barrier crash test at speeds up to 64 km/h (40 mph).

S21 Requirements using 3- year-old child dummies.

S21.1 Each vehicle that is certified as complying with S14 shall, at the option of the manufacturer, meet the requirements specified in S21.2, S21.3, or S21.4, under the test procedures specified in S22 or S28, as applicable.

S21.2 Option l--Automatic suppression feature. Each vehicle shall meet the requirements specified in S21.2.1 through S21.2.3.

S21.2.1 The vehicle shall be equipped with an automatic suppression feature for the passenger air bag which results in deactivation of the air bag during each of the static tests specified in S22.2 (using a 49 CFR Part 572 Subpart P 3-year-old child dummy and, as applicable, any child restraint specified in section C and section D of Appendix A to this standard), and activation of the air bag system during each of the static tests specified in S22.3 (using a 49 CFR Part 572 Subpart 0 5th percentile adult female dummy).

S21.2.2 The vehicle shall be equipped with a telltale light meeting the requirements specified in S19.2.2.

S21.2.3 The vehicle shall be equipped with a mechanism that indicates whether the air bag is suppressed, regardless of whether the passenger seat is occupied. The mechanism need not be located in the occupant compartment unless it is the telltale described in S21.2.2.

S21.3 Option 2–Dynamic automatic suppression system that suppresses the air bag when an occupant is out of position. (This option is available under the conditions set forth in S27.1.) The vehicle shall be equipped with a dynamic automatic suppression system for the passenger air bag system which meets the requirements specified in S27.

S21.4 Option 3--Low risk deployment. Each vehicle shall meet the injury criteria specified in S21.5 of this standard when the passenger air bag is deployed in accordance with both of the low risk deployment test procedures specified in S22.4.

S21.5 Injury criteria for the 49 CFR Part 572, Subpart P 3-year-old child test dummy.

S21.5.1 All portions of the test dummy shall be contained within the outer surfaces of the vehicle passenger compartment.

S21.5.2 Head injury criteria.

(a) For any two points in time, t_1 and t_2, during the event which are separated by not more than a 15 millisecond time interval and where t_1 is less than t_2, the head injury criterion (HIC_{15}) shall be determined using the resultant head acceleration at the center of gravity of the dummy head, a_r, expressed as a multiple of g (the acceleration of gravity) and shall be calculated using the expression:

$$\left[\frac{1}{(t_2 - t_1)}\int_{t_1}^{t_2} a_r \, dt\right]^{2.5} (t_2 - t_1)$$

(b) The maximum calculated HIC_{15} value shall not exceed 570.

S21.5.3 The resultant acceleration calculated from the output of the thoracic instrumentation shall not exceed 55 g's, except for intervals whose cumulative duration is not more than 3 milliseconds.

S21.5.4 Compression deflection of the sternum relative to the spine, as determined by instrumentation, shall not exceed 34 millimeters (I .3 in).

S21.5.5 Neck injury. When measuring neck injury, each of the following injury criteria shall be met.

(a) Nij.

(1) The shear force (Fx), axial force (Fz), and bending moment (My) shall be measured by the dummy upper neck load cell for the duration of the crash event as specified in S4.10. Shear force, axial force, and bending moment shall be filtered for Nij purposes at SAE J211/1 rev. Mar95 Channel Frequency Class 600 (see S4.7).

(2) During the event, the axial force (Fz) can be either in tension or compression while the occipital condyle bending moment (Mocy) can be in either flexion or extension. This results in four possible loading conditions for Nij: tension-extension (Nte), tension-flexion (Ntf),compression-extension (Nce), or compression-flexion (Ncf).

(3) When calculating Nij using equation S21.5.5(a)(4), the critical values, Fzc and Myc,

(i) Fzc = 2120 N (477 lbf) when Fz is in tension

(ii) Fzc = 2120 N (477 lbf) when Fz is in compression

(iii) Myc = 68 Nm (50 lbf-ft) when a flexion moment exists at the occipital condyle

(iv) Myc = 27 Nm (20 lbf-ft) when an extension moment exists at the occipital condyle.

(4) At each point in time, only one of the four loading conditions occurs and the Nij value corresponding to that loading condition is computed and the three remaining loading modes shall be considered a value of zero. The expression for calculating each Nij loading condition is given by:

$$Nij = (Fz / Fzc) + (Mocy / Myc)$$

(5) None of the four Nij values shall exceed 1 .0 at any time during the event.

(b) Peak tension. Tension force (Fz), measured at the upper neck load cell, shall not exceed 1130 N (254 lbf) at any time.

(c) Peak compression. Compression force (Fz), measured at the upper neck load cell, shall not exceed 1380 N (310 lbf) at any time.

S21.5.6 Unless otherwise indicated, instrumentation for data acquisition, data channel frequency class, and moment calculations are the same as given in 49 CFR Part 572 Subpart P 3-year-old child test dummy.

S22 Test procedure for S21.

S22.1 General provisions and definitions.

S22.1.1 Tests specifying the use of a forward facing child restraint, including a booster seat where applicable, may be conducted using any such restraint listed in section C and section D of Appendix A of this standard, respectively. The child restraint may be unused or have been

previously used for static suppression tests only; if it has been used, there shall not be any visible damage prior to the test. Booster seats are to be used in the manner appropriate for a three-year-old child of the same height and weight as the three-year-old child dummy.

S22.1.2 Unless otherwise specified, each vehicle certified to this option shall comply in tests conducted with the right front outboard seating position at the full rearward seat track position, the middle seat track position, and the full forward seat track position. If the dummy contacts the vehicle interior, move the seat rearward to the next detent that provides clearance. If the seat is a power seat, move the seat rearward while assuring that there is a maximum of 5 mm (0.2 in) clearance. All tests are conducted with the seat height, if adjustable, in the mid-height position, and with the seat back angle, if adjustable, at the manufacturer's nominal design seat back angle for a 50th percentile adult male as specified in S8.1.3.

S22.1.3 Except as otherwise specified, if the child restraint has an anchorage system as specified in S5.9 of FMVSS No. 213 and is tested in a vehicle with a right front outboard vehicle seat that has an anchorage system as specified in FMVSS No. 225, the vehicle shall comply with the belted test conditions both with the restraint anchorage system attached and unattached to the vehicle seat anchorage system and with the unbelted test conditions with the restraint anchorage system unattached to the vehicle seat anchorage system.

S22.1.4 Do not attach any tethers.

S22.1.5 The definitions provided in S16.3.1 apply to the tests specified in S22.

S22.2 Static tests of automatic suppression feature which shall result in deactivation of the passenger air bag. Each vehicle that is certified as complying with S21.2 shall meet the following test requirements:

S22.2.1 Belted test with forward facing child restraints or booster seats.

S22.2.I.I Install the restraint in the right front outboard seat in accordance, to the extent possible, with the child restraint manufacturer's instructions provided with the seat for use by children with the same height and weight as the three-year-old child dummy.

S22.2.1.2 Locate a vertical plane through the longitudinal centerline of the child restraint. This will be referred to as "Plane A".

S22.2.1.3 For bucket seats, "Plane B" refers to a vertical plane parallel to the vehicle longitudinal centerline through the geometric center of the right front outboard vehicle seat. For bench seats, "Plane B" refers to a vertical plane through the right front outboard vehicle seat parallel to the vehicle longitudinal centerline the same distance from the longitudinal centerline of the vehicle as the center of the steering wheel.

22.2.1.4 The vehicle shall comply in both of the following positions, if applicable:

(a) Without attaching the child restraint anchorage system as specified in S5.9 of FMVSS No. 213 to a vehicle seat anchorage system specified in FMVSS No. 225 and without attaching any tethers, align the child restraint system facing forward such that Plane A is aligned with Plane B.

(b) If the child restraint is certified to S5.9 of FMVSS No. 213, and the vehicle seat has an anchorage system as specified in FMVSS No. 225, attach the child restraint to the vehicle seat anchorage instead of aligning the planes. Do not attach the vehicle safety belt.

S22.2.1.5 Forward facing child restraint

S22.2.1.5.1 Place any adjustable seat belt anchorages at the vehicle manufacturer's nominal design position for a 50th percentile adult male occupant. Cinch the vehicle belts to any

tension from zero up to 134 N (30 lb) to secure the child restraint. Measure belt tension in a flat, straight section of the lap belt between the child restraint belt path and the contact point with the belt anchor or vehicle seat, on the side away from the buckle (to avoid interference from the shoulder portion of the belt).

S22.2.1.5.2 Position the 49 CFR Part 572 Subpart P 3-year-old child dummy in the child restraint such that the dummy's lower torso is centered on the child restraint and the dummy's spine is against the seat back of the child restraint. Place the arms at the dummy's sides.

S22.2.1.5.3 Attach all belts that come with the child restraint that are appropriate for a child of the same height and weight as the three-year-old child dummy, if any, by following, to the extent possible, the manufacturer's instructions for seating children provided with the child restraint.

S22.2.1.6 Booster seat

S22.2.1.6.1 Place any adjustable seat belt anchorages at the vehicle manufacturer's nominal design position for a 50th percentile adult male occupant. For booster seats designed to be secured to the vehicle seat even when empty, cinch the vehicle belts to any tension from zero up to 134 N (30 lb) to secure the booster seat, Measure belt tension in a flat, straight section of the lap belt between the child restraint belt path and the contact point with the belt anchor or vehicle seat, on the side away from the buckle (to avoid interference from the shoulder portion of the belt).

S22.2.1.6.2 Position the 49 CFR Part 572 Subpart P 3-year-old child dummy in the booster seat such that the dummy's lower torso is centered on the booster seat cushion and the

dummy's spine is parallel to the booster seat back or, if there is no booster seat back, the vehicle seat back. Place the arms at the dummy's sides.

S22.2.1.6.3 If applicable, attach all belts that come with the child restraint that are appropriate for a child of the same height and weight as the three-year-old child dummy, if any, by following, to the extent possible, the manufacturer's instructions for seating children provided with the child restraint.

S22.2.1.6.4 If applicable, place the Type 2 manual belt around the test dummy and fasten the latch. Remove all slack from the lap belt portion. Pull the upper torso webbing out of the retractor and allow it to retract; repeat this four times. Apply a 9 to 18 N (2 to 4 lb) tension load to the lap belt. Allow the excess webbing in the upper torso belt to be retracted by the retractive force of the retractor.

S22.2.1.7 Start the vehicle engine or place the ignition in the "on" position, whichever will turn on the suppression system, and then close all vehicle doors.

S22.2.1.8 Wait 10 seconds, then check whether the air bag is deactivated.

S22.2.2 Unbelted tests with dummies. Place the 49 CFR Part 572 Subpart P 3-year-old child dummy on the right front outboard seat in any of the following positions (without using a child restraint or booster seat or the vehicle's seat belts):

S22.2.2.1 Sitting on seat with back against seat back

(a) Position the dummy in the seated position and place it on the right front outboard seat.

(b) In the case of vehicles equipped with bench seats, position the midsagittal plane of the dummy vertically and parallel to the vehicle's longitudinal centerline and the same distance from the vehicle's longitudinal centerline as the center of the steering wheel. In the case of vehicles

equipped with bucket seats, position the midsagittal plane of the dummy vertically such that it coincides with the longitudinal centerline of the bucket seat. Position the torso of the dummy against the seat back. Position the dummy's thighs against the seat cushion.

(c) Allow the legs of the dummy to extend off the surface of the seat.

(d) Rotate the dummy's upper arms down until they contact the seat back.

(e) Rotate the dummy's lower arms until the dummy's hands contact the seat cushion.

(f) Start the vehicle engine or place the ignition in the "on" position, whichever will turn on the suppression system, and then close all vehicle doors.

(g) Wait 10 seconds, then check whether the air bag is deactivated.

S22.2.2.2 Sitting on seat with back against reclined seat back. Repeat the test sequence in S22.2.2.1 with the seat back angle 25 degrees rearward of the manufacturer's nominal design position for the 50th percentile adult male. If the seat will not recline 25 degrees rearward of the nominal design position, use the closest position that does not exceed 25 degrees,

S22.2.2.3 Sitting on seat with back not against seat back.

(a) Position the dummy in the seated position and place it on the right front outboard seat.

(b) In the case of vehicles equipped with bench seats, position the midsagittal plane of the dummy vertically and parallel to the vehicle's longitudinal centerline and the same distance from the vehicle's longitudinal centerline as the center of the steering wheel. In the case of vehicles equipped with bucket seats, position the midsagittal plane of the dummy vertically such that it coincides with the longitudinal centerline of the bucket seat. Position the dummy with the spine vertical so that the horizontal distance from the dummy's back to the seat back is no less than 25 mm (1 in) and no more than 150 mm (6 in), as measured along the dummy's midsagittal plane at

the mid-sternum level. To keep the dummy in position, a thread with a maximum breaking strength of 3 I 1 N (70 lb) that does not interfere with the air bag may be used to hold the dummy.

(c) Position the dummy's thighs against the seat cushion.

(d) Allow the legs of the dummy to extend off the surface of the seat.

(e) Position the upper arms parallel to the spine and rotate the dummy's lower arms until the dummy's hands contact the seat cushion.

(f) Start the vehicle engine or place the ignition in the "on" position, whichever will turn on the suppression system, and then close all vehicle doors.

(g) Wait 10 seconds, then check whether the air bag is deactivated.

S22.2.2.4 Sitting on seat edge. spine vertical. hands by the dummy's sides.

(a) In the case of vehicles equipped with bench seats, position the midsagittal plane of the dummy vertically and parallel to the vehicle's longitudinal centerline and the same distance from the vehicle's longitudinal centerline as the center of the steering wheel. In the case of vehicles equipped with bucket seats, position the midsagittal plane of the dummy vertically such that it coincides with the longitudinal centerline of the bucket seat.

(b) Position the dummy in the seated position forward in the seat such that the legs are vertical and rest against the front of the seat with the spine vertical. If the dummy's feet contact the floorboard, rotate the legs forward until the dummy is resting on the seat with the feet positioned flat on the floorboard and the dummy spine vertical. To keep the dummy in position, a thread with a maximum breaking strength of 3 11 N (70 lb) that does not interfere with the air bag may be used to hold the dummy.

(c) Place the upper arms parallel to the spine.

(d) Lower the dummy's lower arms such that they contact the seat cushion.

(e) Start the vehicle engine or place the ignition in the "on" position, whichever will turn on the suppression system, and then close all vehicle doors.

(f) Wait 10 seconds, then check whether the air bag is deactivated.

S22.2.2.5 Standing on seat, facing forward.

(a) In the case of vehicles equipped with bench seats, position the midsagittal plane of the dummy vertically and parallel to the vehicle's longitudinal centerline and the same distance from the vehicle's longitudinal centerline as the center of the steering wheel rim. In the case of vehicles equipped with bucket seats, position the midsagittal plane of the dummy vertically such that it coincides with the longitudinal centerline of the bucket seat. Position the dummy in a standing position on the right front outboard seat cushion facing the front of the vehicle while placing the heels of the dummy's feet in contact with the seat back.

(b) Rest the dummy against the seat back, with the arms parallel to the spine.

(c) If the head contacts the vehicle roof, recline the seat so that the head is no longer in contact with the vehicle roof, but allow no more than 5 mm (0.2 in) distance between the head and the roof. If the seat does not sufficiently recline to allow clearance, omit the test.

(d) If necessary use a thread with a maximum breaking strength of 311 N (70 lb) that does not interfere with the air bag or spacer blocks to keep the dummy in position.

(e) Start the vehicle engine or place the ignition in the "on" position, whichever will turn on the suppression system, and then close all vehicle doors.

(f) Wait 10 seconds, then check whether the air bag is deactivated.

S22.2.2.6 Kneeling on seat, facing forward.

(a) Position the dummy in a kneeling position by rotating the dummy's legs 90 degrees behind the dummy (from the standing position) with the toes pointed rearward as much as possible and with the arms parallel to the spine.

(b) In the case of vehicles equipped with bench seats, position the midsagittal plane of the dummy vertically and parallel to the vehicle's longitudinal centerline and the same distance from the vehicle's longitudinal centerline as the center of the steering wheel. In the case of vehicles equipped with bucket seats, position the midsagittal plane of the dummy vertically such that it coincides with the longitudinal centerline of the bucket seat.

(c) Position the kneeling dummy in the right front outboard seat with the dummy facing the front of the vehicle with its toes at the intersection of the seat back and seat cushion. Position the dummy so that the spine is vertical. Push down on the legs so that they contact the seat as much as possible and then release.

(d) If necessary use a thread with a maximum breaking strength of 3 11 N (70 lb) that does not interfere with the air bag or spacer blocks to keep the dummy in position.

(e) Start the vehicle engine or place the ignition in the "on" position, whichever will turn on the suppression system, and then close all vehicle doors.

(f) Wait 10 seconds, then check whether the air bag is deactivated.

S22.2.2.7 Kneeling on seat. facing rearward.

(a) Position the dummy in a kneeling position by rotating the dummy's legs 90 degrees behind the dummy (from the standing position) with the toes pointed rearward as much as possible and the arms parallel to the spine.

(b) In the case of vehicles equipped with bench seats, position the midsagittal plane of the dummy vertically and parallel to the vehicle's longitudinal centerline and the same distance from the vehicle's longitudinal centerline as the center of the steering wheel. In the case of vehicles equipped with bucket seats, position the midsagittal plane of the dummy vertically such that it coincides with the longitudinal centerline of the bucket seat.

(c) Position the kneeling dummy in the right front outboard seat with the dummy facing the rear of the vehicle. Position the dummy such that the dummy's head and torso are in contact with the seat back. Push down on the legs so that they contact the seat as much as possible and then release.

(d) Start the vehicle engine or place the ignition in the "on" position, whichever will turn on the suppression system, and then close all vehicle doors.

(e) Wait 10 seconds, then check whether the air bag is deactivated.

S22.2.2.8 Lying on seat. This test is performed only in vehicles with 3 designated front seating positions.

(a) Lay the dummy on the right front outboard seat such that the following criteria are met:

(1) The midsagittal plane of the dummy is horizontal,

(2) The dummy's spine is perpendicular to the vehicle's longitudinal axis,

(3) The dummy's arms are parallel to its spine,

(4) A plane passing through the two shoulder joints of the dummy is vertical,

(5) The anterior of the dummy is facing the vehicle front,

(6) The head of the dummy is positioned towards the passenger door, and

(7) The horizontal distance from the topmost point of the dummy's head to the vehicle door is 50 to 100 mm (2- 4 in).

(b) Rotate the thighs as much as possible toward the chest of the dummy and rotate the legs as much as possible against the thighs.

(c) Move the dummy's upper left arm parallel to the vehicle's transverse plane and the lower left arm 90 degrees to the upper arm. Rotate the lower left arm about the elbow joint and toward the dummy's head until movement is obstructed.

(d) Start the vehicle engine or place the ignition in the "on" position, whichever will turn on the suppression system, and then close all vehicle doors.

(e) Wait 10 seconds, then check whether the air bag is deactivated.

S22.3 Static tests of automatic suppression feature which shall result in activation of the passenger air bag system.

S22.3.1 Each vehicle certified to this option shall comply in tests conducted with the right front outboard seating position at the full rearward seat track position, the middle seat track position, and, subject to S16.3.3.1.8, the full forward seat track position, All tests are conducted with the seat height, if adjustable, in the mid-height position,

S22.3.2 Place a 49 CFR Part 572 Subpart 0 5th percentile adult female test dummy at the right front outboard seating position of the vehicle, in accordance with procedures specified in S16.3.3 of this standard, except as specified in S22.3.1. Do not fasten the seat belt,

S22.3.3 Start the vehicle engine or place the ignition in the "on" position, whichever will turn on the suppression system, and then close all vehicle doors.

S22.3.4 Wait 10 seconds, then check whether the air bag system is activated.

S22.4 Low risk deployment tests.

S22.4.1 Each vehicle that is certified as complying with S21.4 shall meet the following test requirements with the 49 CFR Part 572, Subpart P 3-year-old child dummy in both of the following positions: Position 1 (S22.4.2) and Position 2 (S22.4.3).

S22.4.1.1 Locate and mark the center point of the dummy's chest/rib plate (the vertical mid-point of the frontal chest plate of the dummy on the midsagittal plane). This is referred to as "Point 1."

S22.4.1.2 Locate the vertical plane parallel to the vehicle longitudinal centerline through the geometric center of the right front air bag tear seam. This is referred to as "Plane D."

S22.4.1.3 Locate the horizontal plane through the geometric center of the right front air bag tear seam. This is referred to as "Plane C."

S22.4.2 Position 1 (chest on instrument panel).

S22.4.2.1 There are no seat track, seat height, or seat back angle requirements.

S22.4.2.2 Place the dummy's midsagittal plane coincident with Plane D.

S22.4.2.3 Initially position the thighs at a right angle to the spine and the legs at a right angle to the thighs. These angles may be adjusted to the extent necessary for the head and torso to attain their final positions.

S22.4.2.4 With the dummy's thorax instrument cavity rear face vertical and Point 1 in Plane C, move the dummy forward until Point 1 contacts the instrument panel. If the dummy's head contacts the windshield and keeps Point 1 from contacting the instrument panel, lower the dummy until there is no more than 5 mm (0.2 in) clearance between the head and the windshield.

S22.4.2.5 Position the upper arms parallel to the spine and rotate the lower arms forward (at the elbow joint) sufficiently to prevent contact with or support from the seat.

S22.4.2.6 Position the legs of the dummy so that the legs are vertical and the feet rest flat on the floorboard (or the feet are positioned parallel to the floorboard) of the vehicle.

S22.4.2.7 Use the seat adjustments (fore-aft, height) to keep the dummy in position. If necessary, thread with a maximum breaking strength of 311 N (70 lb) and spacer blocks may be used to support the dummy in position. The thread should support the torso rather than the head. Support the dummy so that there is minimum interference with the full rotational and translational freedom for the upper torso of the dummy and the thread does not interfere with the air bag.

S22.4.3 Position 2 (head on instrument panel).

S22.4.3.1 Place the passenger seat in the full rearward seating position. Place the seat back in the manufacturer's nominal design seat back angle for a 50th percentile adult male as specified in S8.1.3. If adjustable in the vertical direction, place the seat in the mid-height position.

S22.4.3.2 Place the dummy in the front passenger seat such that:

S22.4.3.2.1 The dummy's midsagittal plane is coincident with Plane D. With the thighs on the seat, initially set the thighs perpendicular to the torso and the legs perpendicular to the thighs. Position the upper arms parallel to the torso and rotate the lower arms forward (at the elbow) sufficiently to prevent contact with or support from the seat.

S22.4.3.2.2 The dummy is positioned in the seat such that the legs rest against the front of the seat and such that the dummy's thorax instrument cavity rear face is vertical. If it is not

possible to position the dummy with the legs in the prescribed position, rotate the legs forward until the dummy is resting on the seat with the feet positioned flat on the floorboard.

S22.4.3.3 Move the seat forward, while maintaining the thorax instrument cavity rear face orientation until any part of the dummy contacts the vehicle's instrument panel.

S22.4.3.4 If contact has not been made with the vehicle's instrument panel at the full forward seating position of the seat, slide the dummy forward on the seat 190 mm (7.5 in) or until contact is made, whichever is first. Maintain the thorax instrument cavity rear face vertical orientation.

S22.4.3.5 If contact has not been made, apply a force towards the front of the vehicle on the spine of the dummy between the shoulder joints until the head or torso comes into contact with the vehicle's instrument panel.

S22.4.3.6 If necessary. rotate the thighs and rotate the legs and feet so as not to impede the motion of the head/torso into the vehicle's instrument panel.

S22.4.3.7 Rotate the lower arms forward if necessary to prevent contact with or support from the seat.

S22.4.3.8 If necessary, thread with a maximum breaking strength of 3 11 N (70 lb) and spacer blocks may be used to support the dummy in position. The thread should support the torso rather than the head. Support the dummy so that there is minimum interference with the full rotational and translational freedom for the upper torso of the dummy and the thread does not interfere with the air bag.

S22.4.4 Deploy the right front outboard frontal air bag system. If the frontal air bag system contains a multistage inflator, the vehicle shall be able to comply with the injury criteria at

any stage or combination of stages or time delay between successive stages that could occur in a rigid barrier crash test at or below 26 km/h (16 mph), under the test procedure specified in S22.5.

S22.5 Test procedure for determining stages of air bag systems subject to low risk deployment test requirement.

S22.5.1 Impact the vehicle traveling longitudinally forward at any speed, up to and including 26 km/h (16 mph) into a fixed rigid barrier that is perpendicular ± 5 degrees to the line of travel of the vehicle under the applicable conditions of S8 and S10, excluding S10.7, S10.8, and S10.9.

S22.5.2 Determine which inflation stage or combination of stages are tired and determine the time delay between successive stages. That stage or combination of stages, with time delay between successive stages, shall be used in deploying the air bag when conducting the low risk deployment tests described in S22.4, S24.4, and S26.

S22.5.3 If the air bag does not deploy in the impact described in S22.5.1, the low risk deployment tests described in S22.4, S24.4, and S26 will be conducted with the first inflation stage of the air bag system.

S23 Requirements using 6-year-old child dummies.

S23.1 Each vehicle that is certified as complying with S14 shall, at the option of the manufacturer, meet the requirements specified in S23.2, S23.3, or S23.4, under the test procedures specified in S24 or S28, as applicable.

S23.2 Option 1 --Automatic suppression feature. Each vehicle shall meet the requirements specified in S23.2.1 through S23.2.3.

S23.2.1 The vehicle shall be equipped with an automatic suppression feature for the passenger frontal air bag system which results in deactivation of the air bag during each of the static tests specified in S24.2 (using a 49 CFR Part 572 Subpart N 6-year-old child dummy in any of the child restraints specified in section D of Appendix A of this standard), and activation of the air bag system during each of the static tests specified in S24.3 (using a 49 CFR Part 572 Subpart 0 5th percentile adult female dummy).

S23.2.2 The vehicle shall be equipped with a telltale light meeting the requirements specified in S19.2.2.

S23.2.3 The vehicle shall be equipped with a mechanism that indicates whether the air bag is suppressed, regardless of whether the passenger seat is occupied. The mechanism need not be located in the occupant compartment unless it is the telltale described in S23.2.2.

S23.3 Option 2-- Dynamic automatic suppression system that suppresses the air ban when an occupant is out of position. (This option is available under the conditions set forth in S27.1.) The vehicle shall be equipped with a dynamic automatic suppression system for the passenger frontal air bag system which meets the requirements specified in S27.

S23.4 Option 3--Low risk deployment. Each vehicle shall meet the injury criteria specified in S23.5 of this standard when the passenger air bag is statically deployed in accordance with both of the low risk deployment test procedures specified in S24.4.

S23.5 Injury criteria for the 49 CFR Part 572 Subpart N 6-year-old child dummy.

S23.5.1 All portions of the test dummy shall be contained within the outer surfaces of the vehicle passenger compartment.

S23.5.2 Head injury criteria.

(a) For any two points in time, t_1 and t_2, during the event which are separated by not more than a 15 millisecond time interval and where t_1 is less than t_2, the head injury criterion (HIC_{15}) shall be determined using the resultant head acceleration at the center of gravity of the dummy head, a_r, expressed as a multiple of g (the acceleration of gravity) and shall be calculated using the expression:

$$\left[\frac{1}{(t_2 - t_1)}\int_{t_1}^{t_2} a_r \, dt\right]^{2.5} (t_2 - t_1)$$

(b) The maximum calculated HIC_{15} value shall not exceed 700.

S23.5.3 The resultant acceleration calculated from the output of the thoracic instrumentation shall not exceed 60 g's, except for intervals whose cumulative duration is not more than 3 milliseconds.

S23.5.4 Compression deflection of the sternum relative to the spine, as determined by instrumentation, shall not exceed 40 mm (1.6 in).

S23.5.5 Neck injury. When measuring neck injury, each of the following injury criteria shall be met.

(a) Nij.

(1) The shear force (Fx), axial force (Fz), and bending moment (My) shall be measured by the dummy upper neck load cell for the duration of the crash event as specified in S4.10. Shear force, axial force, and bending moment shall be filtered for Nij purposes at SAE J211/1 rev. Mar95 Channel Frequency Class 600 (see S4.7).

(2) During the event, the axial force (Fz) can be either in tension or compression while the occipital condyle bending moment (Mocy) can be in either flexion or extension. This results in

four possible loading conditions for Nij: tension-extension (Nte), tension-flexion (Ntf), compression-extension (Nce), or compression-flexion (Ncf).

(3) When calculating Nij using equation S23.5.5(a)(4), the critical values, Fzc and Myc, are:

(i) Fzc = 2800 N (629 lbf) when Fz is in tension

(ii) Fzc = 2800 N (629 lbf) when Fz is in compression

(iii) Myc = 93 Nm (69 lbf-ft) when a flexion moment exists at the occipital condyle

(iv) Myc = 37 Nm (27 lbf-ft) when an extension moment exists at the occipital condyle.

(4) At each point in time, only one of the four loading conditions occurs and the Nij value corresponding to that loading condition is computed and the three remaining loading modes shall be considered a value of zero. The expression for calculating each Nij loading condition is given by:

$$Nij = (Fz / Fzc) + (Mocy / Myc)$$

(5) None of the four Nij values shall exceed 1.0 at any time during the event.

(b) Peak tension. Tension force (Fz), measured at the upper neck load cell, shall not exceed 1490 N (335 lbf) at any time.

(c) Peak compression. Compression force (Fz), measured at the upper neck load cell, shall not exceed 1820 N (409 lbf) at any time.

S23.5.6 Unless otherwise indicated, instrumentation for data acquisition, data channel frequency class, and moment calculations are the same as given for the 49 CFR Part 572 Subpart N 6-year-old child test dummy.

S24 Test procedure for S23.

S24.1 General provisions and definitions.

S24.1.1 Tests specifying the use of a booster seat may be conducted using any such restraint listed in section D of Appendix A of this standard. The booster seat may be unused or have been previously used for static suppression tests only; if it has been used, there shall not be any visible damage prior to the test. Booster seats are to be used in the manner appropriate for a six-year-old child of the same height and weight as the six-year-old child dummy.

S24.1.2 Unless otherwise specified, each vehicle certified to this option shall comply in tests conducted with the right front outboard seating position at the full rearward seat track position, the middle seat track position, and the full forward seat track position. If the dummy contacts the vehicle interior, move the seat rearward to the next detent that provides clearance. If the seat is a power seat, move the seat rearward while assuring that there is a maximum of 5 mm (0.2 in) distance between the vehicle interior and the point on the dummy that would first contact the vehicle interior. All tests are conducted with the seat height, if adjustable, in the mid-height position, and with the seat back angle, if adjustable, at the manufacturer's nominal design seat back angle for a 50th percentile adult male as specified in S8.1.3.

S24.1.3 Except as otherwise specified, if the booster seat has an anchorage system as specified in S5.9 of FMVSS No. 213 and is tested in a vehicle with a right front outboard vehicle seat that has an anchorage system as specified in FMVSS No. 225, the vehicle shall comply with the belted test conditions both with the restraint anchorage system attached and unattached to the vehicle seat anchorage system and with the unbelted test conditions with the restraint anchorage system unattached to the vehicle seat anchorage system

S24.1.4 Do not attach any tethers.

S24.1.5 The definitions provided in S16.3.1 apply to the tests specified in S24.

S24.2 Static tests of automatic suppression feature which shall result in deactivation of the passenger air baa. Each vehicle that is certified as complying with S23.2 shall meet the following test requirements.

S24.2.1 Except as provided in S24.2.2, conduct all tests as specified in S22.2, except that the 49 CFR Part 572 Subpart N 6-year-old child dummy shall be used.

S24.2.2 Exceptions. The tests specified in the following paragraphs of S22.2 need not be conducted: S22.2.1.5, S22.2.2.3, S22.2.2.5, S22.2.2.6, S22.2.2.7, and S22.2.2.8.

S24.2.3 Sitting back in the seat and leaning on the right front passenger door

(a) Position the dummy in the seated position and place the dummy in the right front outboard seat. For bucket seats, position the midsagittal plane of the dummy vertically such that it coincides with the vertical longitudinal plane through the longitudinal center line of the seat cushion. For bench seats, position the midsagittal plane of the dummy vertically and parallel to the vehicle's longitudinal centerline and the same distance from the longitudinal centerline of the vehicle as the center of the steering wheel.

(b) Place the dummy's back against the seat back and rest the dummy's thighs on the seat cushion.

(c) Allow the legs and feet of the dummy to extend off the surface of the seat. If this positioning of the dummy's legs is prevented by contact with the instrument panel, move the seat rearward to the next detent that provides clearance. If the seat is a power seat, move the seat rearward, while assuring that there is a minimum of 5 mm (0.2 in) distance between the vehicle interior and the part of the dummy that was in contact with the vehicle interior.

(d) Rotate the dummy's upper arms toward the seat back until they make contact.

(e) Rotate the dummy's lower arms down until they contact the seat.

(f) Close the vehicle's passenger-side door and then start the vehicle engine or place the ignition in the "on" position, whichever will turn on the suppression system.

(g) Push against the dummy's left shoulder to lean the dummy against the door; close all remaining doors.

(h) Wait 10 seconds, then check whether the air bag is deactivated.

S24.3 Static tests of automatic suppression feature which shall result in activation of the passenger air bag system.

S24.3.1 Each vehicle certified to this option shall comply in tests conducted with the right front outboard seating position at the full rearward seat track position, the middle seat track position, and, subject to S16.3.3.1.8, the full forward seat track position. All tests are conducted with the seat height, if adjustable, in the mid-height position.

S24.3.2 Place a 49 CFR Part 572 Subpart 0 5th percentile adult female test dummy at the right front outboard seating position of the vehicle, in accordance with procedures specified in S16.3.3 of this standard, except as specified in S24.3.1. Do not fasten the seat belt.

S24.3.3 Start the vehicle engine or place the ignition in the "on" position, whichever will turn on the suppression system, and then close all vehicle doors.

S24.3.4 Wait 10 seconds, then check whether the air bag system is activated.

S24.4 Low risk deployment tests.

S24.4.1 Each vehicle that is certified as complying with S23.4 shall meet the following test requirements with the 49 CFR Part 572 Subpart N 6-year-old child dummy in both of the following positions: Position 1 (S24.4.2) or Position 2 (S24.4.3).

S24.4.1.1 Locate and mark the center point of the dummy's rib cage or sternum plate (the vertical mid-point of the frontal chest plate of the dummy on the midsagittal plane). This is referred to as "Point 1."

S24.4.1.2 Locate the vertical plane parallel to the vehicle longitudinal centerline through the geometric center of the right front air bag tear seam. This is referred to as "Plane D."

S24.4.1.3 Locate the horizontal plane through the geometric center of the right front air bag tear seam. This is referred to as "Plane C."

S24.4.2 Position 1 (chest on instrument panel).

S24.4.2.1 There are no seat track, seat height, or seat back angle requirements.

S24.4.2.2 Remove the legs of the dummy at the pelvic interface.

S24.4.2.3 Place the dummy's midsagittal plane coincident with Plane D.

S24.4.2.4 With the dummy's thorax instrument cavity rear face 6 degrees forward of the vertical and Point 1 in Plane C, move the dummy forward until Point 1 contacts the instrument panel. If the dummy's head contacts the windshield and keeps Point 1 from contacting the instrument panel, lower the dummy until there is no more than 5 mm (0.2 in) clearance between the head and the windshield.

S24.4.2.5 Position the upper arms parallel to the spine and rotate the lower arms forward (at the elbow joint) sufficiently to prevent contact with or support from the seat.

S24.4.2.6 Use the seat adjustments (fore-aft, height) to keep the dummy in position. If necessary, thread with a maximum breaking strength of 3 I 1 N (70 lb) and spacer blocks may be used to support the dummy in position. The thread should support the torso rather than the head. Support the dummy so that there is minimum interference with the full rotational and translational freedom for the upper torso of the dummy and the thread does not interfere with the air bag.

S24.4.3 Position 2 (head on instrument panel).

S24.4.3.1 Place the passenger seat in the full rearward seating position. Place the seat back in the nominal design position for a 50th percentile adult male (S8.1.3) as specified by the vehicle manufacturer. If adjustable in the vertical direction, place the seat in the mid-height position.

S24.4.3.2 Place the dummy in the front passenger seat such that:

S24.4.3.2.1 The dummy's midsagittal plane is coincident with Plane D. With the thighs on the seat, initially set the thighs perpendicular to the torso and the legs perpendicular to the thighs. Position the upper arms parallel to the torso and rotate the lower arms forward (at the elbow) sufficiently to prevent contact with or support from the seat.

S24.4.3.2.2 The dummy is positioned in the seat such that the legs rest against the front of the seat and such that the dummy's thorax instrument cavity rear face is 6 degrees forward of vertical. If it is not possible to position the dummy with the legs in the prescribed position, rotate the legs forward until the dummy is resting on the seat with the feet positioned flat on the floorboard.

S24.4.3.3 Move the seat forward, while maintaining the thorax instrument cavity rear face orientation until any part of the dummy contacts the vehicle's instrument panel.

S24.4.3.4 If contact has not been made with the vehicle's instrument panel at the full forward seating position of the seat, slide the dummy forward on the seat 190 mm (7.5 in) or until contact is made, whichever is first. Maintain the thorax instrument cavity rear face orientation.

S24.4.3.5 If contact has not been made, apply a force towards the front of the vehicle on the spine of the dummy between the shoulder joints until the head or torso comes into contact with the vehicle's instrument panel.

S24.4.3.6 If necessary, rotate the thighs and rotate the legs and feet so as not to impede the motion of the head/torso into the vehicle's instrument panel.

S24.4.3.7 Rotate the lower arms forward if necessary to prevent contact with or support from the seat.

S24.4.3.8 If necessary, thread with a maximum breaking strength of 311 N (70 lb) and spacer blocks may be used to support the dummy in position. Thread should support the torso rather than the head. Support the dummy so that there is minimum interference with the full rotational and translational freedom for the upper torso of the dummy and the thread does not interfere with the air bag.

S24.4.4 Deploy the right front outboard frontal air bag system. If the frontal air bag system contains a multistage inflator, the vehicle shall be able to comply with the injury criteria at any stage or combination of stages and at any time delay between successive stages that could occur in a rigid barrier crash at speeds up to 26 km/h (16 mph) under the test procedure specified in S22.5.

S25 Requirements using an out-of-position 5th percentile adult female dummy at the driver position.

S25.1 Each vehicle certified as complying with S14 shall, at the option of the manufacturer, meet the requirements specified in S25.2 or S25.3 under the test procedures specified in S26 or S28, as appropriate.

S25.2 Option 1-- Dynamic automatic suppression system that suppresses the air bag when the driver is out of position. (This option is available under the conditions set forth in S27.1.) The vehicle shall be equipped with a dynamic automatic suppression system for the driver air bag which meets the requirements specified in S27.

S25.3 Option 2--Low risk deployment. Each vehicle shall meet the injury criteria specified by S15.3 of this standard, except as modified in S25.4, when the driver air bag is statically deployed in accordance with both of the low risk deployment test procedures specified in S26.

S25.4 Neck injury criteria driver low risk deployment tests. When measuring neck injury in low risk deployment tests for the driver position, each of the following neck injury criteria shall be met.

(a) Nij.

(1) The shear force (Fx), axial force (Fz), and bending moment (My) shall be measured by the dummy upper neck load cell for the duration of the crash event as specified in S4. IO. Shear force, axial force, and bending moment shall be filtered for Nij purposes at SAE J211/1 rev. Mar 95 Channel Frequency Class 600 (see S4.7).

(2) During the event, the axial force (Fz) can be either in tension or compression while the occipital condyle bending moment (Mocy) can be in either flexion or extension. This results in

four possible loading conditions for Nij: tension-extension (Nte), tension-flexion (Ntf), compression-extension (Nce), or compression-flexion (Ncf).

(3) When calculating Nij using equation S25.4(a)(4), the critical values, Fzc and Myc, are:

(i) Fzc = 3880 N (872 lbf) when Fz is in tension

(ii) Fzc = 3880 N (872 lbf) when Fz is in compression

(iii) Myc = 155 Nm (114 lbf-ft) when a flexion moment exists at the occipital condyle

(iv) Myc = 61 Nm (45 lbf-ft) when an extension moment exists at the occipital condyle.

(4) At each point in time, only one of the four loading conditions occurs and the Nij value corresponding to that loading condition is computed and the three remaining loading modes shall be considered a value of zero. The expression for calculating each Nij loading condition is given by:

$$Nij = (Fz / Fzc) + (Mocy / Myc)$$

(5) None of the four Nij values shall exceed 1 .0 at any time during the event.

(b) Peak tension. Tension force (Fz), measured at the upper neck load cell, shall not exceed 2070 N (465 lbf) at any time.

(c) Peak compression. Compression force (Fz), measured at the upper neck load cell, shall not exceed 2520 N (566 lbf) at any time.

(d) Unless otherwise indicated, instrumentation for data acquisition, data channel frequency class, and moment calculations are the same as given in 49 CFR Part 572 Subpart 0 5th percentile female test dummy.

S26 Procedure for low risk deployment tests of driver air bag.

S26.1 Each vehicle that is certified as complying with S25.3 shall meet the requirements of S25.3 and S25.4 with the 49 CFR Part 572 Subpart 0 5th percentile adult female dummy in both of the following positions: Driver position 1 (S26.2) and Driver position 2 (S26.3).

S26.2 Driver position 1 (chin on module).

S26.2.1 Adjust the steering controls so that the steering wheel hub is at the geometric center of the locus it describes when it is moved through its full range of driving positions. If there is no setting at the geometric center, position it one setting lower than the geometric center. Set the rotation of the steering wheel so that the vehicle wheels are pointed straight ahead.

S26.2.2 Locate the vertical plane parallel to the vehicle longitudinal axis which passes through the geometric center of the driver air bag tear seam. This is referred to as “Plane E."

S26.2.3 Place the seat in the full rearward seating position. If adjustable in the vertical direction, place the seat in the mid-height position.

S26.2.4 Place the dummy in a seated position with its midsagittal plane coincident with Plane E.

S26.2.5 Initially position the legs at a 90-degree angle to the thighs. The legs may be adjusted if necessary to achieve the final head position.

S26.2.6 Position the dummy’s thorax instrument cavity rear face 6 degrees forward (toward the front of the vehicle) of the steering wheel angle (i.e., if the steering wheel angle is 25 degrees from vertical, the thorax instrument cavity rear face angle is 3 1 degrees).

S26.2.7 Move the seat forward, while retaining the thorax instrument cavity rear face orientation, to the forwardmost seat track position or until any portion of the dummy contacts the steering wheel, whichever occurs first.

S26.2.7 Adjust the height of the dummy so that the bottom of the chin is in the same horizontal plane as the highest point of the air bag module cover (dummy height can be adjusted using the seat height adjustments and/or spacer blocks). If the seat prevents the bottom of the chin from being in the same horizontal plane as the module cover, adjust the dummy height to as close to the prescribed position as possible.

S26.2.8 Slide the dummy forward on the seat until either the head or the torso contacts the steering wheel.

S26.2.9 Use the seat adjustments (fore-aft, height) to keep the dummy in position. If necessary, thread with a maximum breaking strength of 311 N (70 lb) and spacer blocks may be used to support the dummy in position. The thread should support the torso rather than the head. Support the dummy so that there is minimum interference with the full rotational and translational freedom for the upper torso of the dummy and the thread does not interfere with the air bag.

S26.3 Driver position 2 (chin on rim).

S26.3.1 There are no seat track, seat height, or seat back angle requirements.

S26.3.2 Adjust the steering controls so that the steering wheel hub is at the geometric center of the locus it describes when it is moved through its full range of driving positions. If there is no setting at the geometric center, position it one setting lower than the geometric center. Set the rotation of the steering wheel so that the vehicle wheels are pointed straight ahead.

S26.3.3 Locate the vertical plane parallel to the vehicle longitudinal axis which passes through the geometric center of the driver air bag tear seam. This is referred to as “Plane E."

S26.3.4 Place the dummy in a seated position with its midsagittal plane coincident with Plane E.

S26.3.5 Initially position the legs at a 90-degree angle to the thighs. The legs may be adjusted if necessary to achieve the final head position.

S26.3.6 Position the dummy's thorax instrument cavity rear face 6 degrees forward (toward the front of the vehicle) of the steering wheel angle (Le., if the steering wheel angle is 25 degrees from vertical, the thorax instrument cavity rear face angle is 3 1 degrees).

S26.3.7 Position the dummy so that the center of the chin is in contact with the uppermost portion of the rim of the steering wheel. Do not hook the chin over the top of the rim of the steering wheel. Position the chin to rest on the upper edge of the rim, without loading the neck. If the dummy's head contacts the vehicle windshield or upper interior before the prescribed position can be obtained, lower the dummy until there is no more than 5 mm (0.2 in) clearance between the vehicle's windshield or upper interior, as applicable.

S26.3.8 Use the seat adjustments (fore-aft, height) to keep the dummy in position. If necessary, thread with a maximum breaking strength of 3 11N (70 lb) and spacer blocks may be used to support the dummy in position. The thread should support the torso rather than the head, Support the dummy so that there is minimum interference with the full rotational and translational freedom for the upper torso of the dummy and the thread does not interfere with the air bag.

S26.4 Deploy the left front outboard frontal air bag system. If the air bag system contains a multistage inflator, the vehicle shall be able to comply with the injury criteria at any stage or combination of stages or time delay between successive stages that could occur in a rigid barrier crash at speeds up to 26 km/h (16 mph) under the test procedure specified in S22.5.

S27 Option for dynamic automatic suppression system that suppresses the air bag when an occupant is out-of-position.

S27.1 Availability of option. This option is available for either air bag, singly or in conjunction, subject to the requirements of S27, if:

(a) A petition for rulemaking to establish dynamic automatic suppression system test procedures is submitted pursuant to Subpart B of Part 552 and a test procedure applicable to the vehicle is added to S28 pursuant to the procedures specified by that subpart, or

(b) A test procedure applicable to the vehicle is otherwise added to S28.

S27.2 Definitions. For purposes of S27 and S28, the following definitions apply:

Automatic suppression zone or ASZ means a three-dimensional zone adjacent to the air bag cover, specified by the vehicle manufacturer, where the deployment of the air bag will be suppressed by the DASS if a vehicle occupant enters the zone under specified conditions.

Dynamic automatic suppression system or DASS means a portion of an air bag system that automatically controls whether or not the air bag deploys during a crash by:

(1) Sensing the location of an occupant, moving or still, in relation to the air bag;

(2) Interpreting the occupant characteristics and location information to determine whether or not the air bag should deploy; and

(3) Activating or suppressing the air bag system based on the interpretation of occupant characteristics and location information.

S27.3 Requirements. Each vehicle shall, at each applicable front outboard designated seating position, when tested under the conditions of S28 of this standard, comply with the requirements specified in S27.4 through S27.6.

S27.4 Each vehicle shall be equipped with a DASS.

S27.5 Static test requirement (low risk deployment for occupants outside the ASZ).

S27.5.1 Driver (49 CFR Part 572 Subpart 0 5th percentile female dummy). Each vehicle shall meet the injury criteria specified in S15.3 of this standard when the driver air bag is deployed in accordance with the procedures specified in S28.1.

S27.5.2 Passenger (49 CFR Part 572 Subpart P 3-year-old child dummy and 49 CFR Part 572 Subpart N 6-year-old child dummy). Each vehicle shall meet the injury criteria specified in S21.5 and S23.5, as appropriate, when the passenger air bag is deployed in accordance with the procedures specified in S28.2.

S27.6 Dynamic test requirement (suppression of air bag for occupants inside the ASZ).

S27.6.1 Driver. The DASS shall suppress the driver air bag before the head, neck, or torso of the specified test device enters the ASZ when the vehicle is tested under the procedures specified in S28.3.

S27.6.2 Passenger. The DASS shall suppress the passenger air bag before head, neck, or torso of the specified test device enters the ASZ when the vehicle is tested under the procedures specified in S28.4.

S28 Test procedure for S27 of this standard. [Reserved]

S28.1 Driver suppression zone verification test (49 CFR Part 572 Subpart 0 5th percentile female dummy). [Reserved]

S28.2 Passenger suppression zone verification test (49 CFR Part 572 Subpart P 3-year-old child dummy and 49 CFR Part 572 Subpart N 6-year-old child dummies). [Reserved]

S28.3 Driver dynamic test procedure for DASS requirements. [Reserved]

S28.4 Passenger dynamic test procedure for DASS requirements. [Reserved]

S29 Manufacturer option to certify vehicles to certain static suppression test requirements using human beings rather than test dummies.

S29.1 At the option of the manufacturer, instead of using test dummies in conducting the tests for the following static test requirements, human beings may be used as specified. If human beings are used, they shall assume, to the extent possible, the final physical position specified for the corresponding dummies for each test.

(a) If a manufacturer decides to certify a vehicle using a human being for a static test, it shall use humans for the entire series of tests, e.g., 3-year-old children for each static test involving 3-year-old test dummies. If a manufacturer decides to certify a vehicle using a test dummy for a static test, it shall use test dummies for the entire series of tests, e.g., a Hybrid III 3-year-old child dummy for each static test involving 3-year-old test dummies.

(b) For S21.2, instead of using the 49 CFR Part 572 Subpart P 3-year-old child dummy, a human child who weighs between 13.4 and 18 kg (29.5 and 39.5 lb), and who is between 89 and 99 cm (35 and 39 in) tall may be used.

(c) For S23.2, instead of using the 49 CFR Part 572 Subpart N 6-year-old child dummy, a human child who weighs between 21 and 25.6 kg (46.5 and 56.5 lb), and who is between 114 and 124.5 cm (45 and 49 in) tall may be used.

(d) For S19.2, S21.2, and S23.2, instead of using the 49 CFR Part 572 Subpart 0 5th percentile adult female test dummy, a female who weighs between 46.7 and 5 1.25 kg (103 lb and 113 lb), and who is between 139.7 and 150 cm (55 and 59 in) tall may be used.

S29.2 Human beings shall be dressed in a cotton T-shirt, full length cotton trousers, and sneakers. Specified weights and heights include clothing.

S29.3 A manufacturer exercising this option shall upon request--

(a) Provide NHTSA with a method to deactivate the air bag during compliance testing under S20.3, S22.2, S22.3, S24.2, and S24.3, and identify any parts or equipment necessary for deactivation; such assurance may be made by removing the air bag; and

(b) Provide NHTSA with a method to assure that the same test results would be obtained if the air bag were not deactivated.

Figures to §571.208

* * * * *

Label Outline, Vertical and Horizontal Lines Black

Bottom **Text** and Artwork Black with White Background

Top Text Black with Yellow Background

A WARNING

EVEN WITH ADVANCED AIR BAGS

- Children can be killed or seriously injured by the air bag
- The back seat is the safest place for children
- Always use seat belts and child restraints
- See owner's manual for more information about air bags

Figure 8. Sun Visor Label Visible when Visor is in Down Position.

Label Outline, Vertical and Horizontal Lines Black

Bottom Text Black with White Background

Top Text Black with Yellow Background

This Vehicle is Equipped with Advanced Air Bags

Even with Advanced Air Bags

Children can be killed or seriously injured by the air bag.

The back seat is the safest place for children.

Always use seat belts and child restraints.

See owner's manual for more information about air bags.

Figure **9. Removable Label on Dash.**

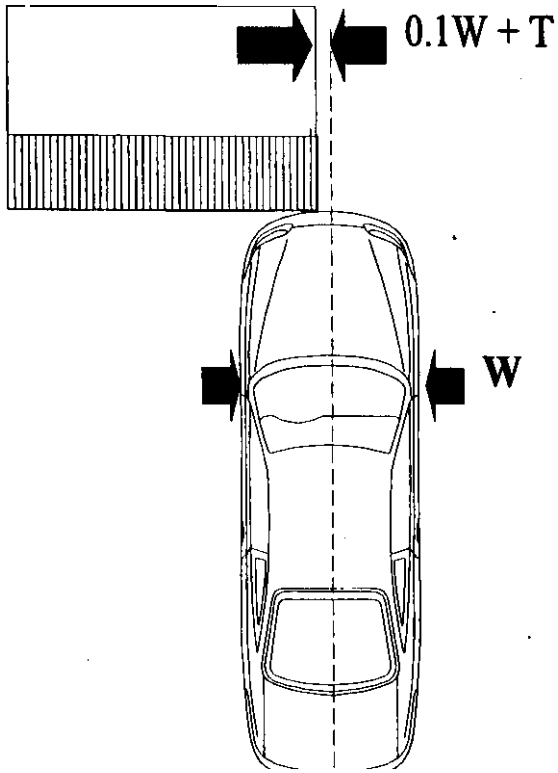

40% Overlap

Legend

---- Longitudinal Centerline of Vehicle

W Vehicle Width

T Tolerance

Figure 10 Configuration for Frontal Offset Deformable Barrier Test

Appendix A to §571.208 -- Selection of Child Restraint Systems

A. The following car bed, manufactured on or after December 1, 1999, may be used by the National Highway Traffic Safety Administration to test the suppression system of a vehicle that has been certified as being in compliance with 49 CFR Part 571.208 S19:

Cosco Dream Ride 02-719

B. Any of the following rear facing child restraint systems, manufactured on or after December 1, 1999, may be used by the National Highway Traffic Safety Administration to test the suppression system of a vehicle that has been certified as being in compliance with 49 CFR Part 571.208 S 19. When the restraint system comes equipped with a removable base, the test may be run either with the base attached or without the base.

Britax Handle with Care 191

Century 560 Institutional 4590

Century Smart Fit 4541

Cosco Arriva 02-750

Cosco Turnabout 02-772

Evenflo Discovery 209

Evenflo First Choice 204

Evenflo On My Way 207

Evenflo Position Right 200

Graco Infant 8457

Kolcraft Secura 43924

C. Any of the following forward-facing convertible child restraint systems, manufactured on or after December 1, 1999, may be used by the National Highway Traffic Safety Administration to test the suppression system of a vehicle that has been certified as being in compliance with 49 CFR Part 571.208 S19, or S21:

Britax Roundabout 161

Century Encore 4612

Cosco Touriva 02-584

Evenflo Champion 249

Evenflo Medallion 254

Fisher Price Safe-Embrace 79701

Kolcraft Performa 23308

D. Any of the following forward-facing toddler/belt positioning booster systems, manufactured on or after December 1, 1999, may be used by the National Highway Traffic Safety Administration as test devices to test the suppression system of a vehicle that has been certified as being in compliance with 49 CFR Part 571.208 S21 or S23:

Britax Cruiser 121

Century Next Step 4920

Cosco High Back Booster 02-442

Evenflo Right Fit 245

6. Part 585 is revised to read as follows:

PART 585--ADVANCED AIR BAG PHASE-IN REPORTING REQUIREMENTS

Sec.

585.1 Scope.

585.2 Purpose.

585.3 Applicability.

585.4 Definitions.

585.5 Reporting requirements.

585.6 Records.

585.7 Petitions to extend period to tile report.

AUTHORITY: 49 U.S.C. 322, 30111, 30115, 30117, and 30166; delegation of authority at 49 CFR 1.50.

§ 585.1 Scope.

This part establishes requirements for manufacturers of passenger cars and trucks, buses, and multipurpose passenger vehicles with a GVWR of 3,855 kg (8500 lb) or less and an unloaded vehicle weight of 2,495 kg (5500 lb) or less to submit reports, and maintain records related to the reports, concerning the number and identification of such vehicles that are certified as complying with the advanced air bag requirements of Standard No. 208, "Occupant crash protection" (49 CFR 571.208).

§ 585.2 Purpose.

The purpose of these reporting requirements is to aid the National Highway Traffic Safety Administration in determining whether a manufacturer has complied with the advanced air bag requirements of Standard No. 208 during the phase-ins of those requirements.

§ 585.3 Applicability.

This part applies to manufacturers of passenger cars and trucks, buses, and multipurpose passenger vehicles with a GVWR of 3,855 kg (8500 lb) or less and an unloaded vehicle weight of 2,495 kg (5500 lb) or less. However, this part does not apply to any manufacturers whose production consists exclusively of walk-in vans, vehicles designed to be sold exclusively to the U.S. Postal Service, vehicles manufactured in two or more stages, and vehicles that are altered after previously having been certified in accordance with part 567 of this chapter. In addition, this part does not apply to manufacturers whose worldwide production of motor vehicles is less than 5000 vehicles in a production year.

§ 585.4 Definitions.

(a) All terms defined in 49 U.S.C. 30102 are used in accordance with their statutory meaning.

(b) The terms bus, gross vehicle weight rating or GVWR, multipurpose passenger vehicle, passenger car, and truck are used as defined in section 571.3 of this chapter.

(c) For the purposes of this part, vehicles means passenger cars and trucks, buses, and multipurpose passenger vehicles with a GVWR of 3,855 kg (8500 lb) or less and an unloaded vehicle weight of 2,495 kg (5500 lb) or less manufactured for sale in the United States by manufacturers whose worldwide production of motor vehicles is equal to or greater than 5000 vehicles in a production year, and does not mean walk-in vans, vehicles designed to be sold

exclusively to the U.S. Postal Service, vehicles manufactured in two or more stages, and vehicles that are altered after previously having been certified in accordance with part 567 of this chapter.

(d) Phase one of the advanced air bag requirements of Standard No. 208 refers to the requirements set forth in S14.1, S14.2, S14.5.1(a), S14.5.2, S15.1, S15.2, S17, S19, S21, S23, and S25 of Federal Motor Vehicle Safety Standard No. 208, 49 CFR 571.208.

(e) Phase two of the advanced air bag requirements of Standard No. 208 refers to the requirements set forth in S14.3, S14.4, S14.5.1(b), S14.5.2, S15.1, S15.2, S17, S19, S21, S23, and S25 of Federal Motor Vehicle Safety Standard No. 208, 49 CFR 571.208.

(f) Production year means the 12-month period between September 1 of one year and August 3 I of the following year, inclusive.

(g) Limited line manufacturer means a manufacturer that sells two or fewer carlines, as that term is defined in 49 CFR 583.4, in the United States during a production year.

§ 585.5 Reporting requirements.

(a) Advanced credit phase-in reporting requirements.

(1) Within 60 days after the end of the production years ending August 3 1, 2000, August 3 1, 2001, August 3 1, 2002, and August 3 1, 2003, each manufacturer choosing to certify vehicles manufactured during any of those production years as complying with phase one of the advanced air bag requirements of Standard No. 208 shall submit a report to the National Highway Traffic Safety Administration as specified in this section.

(2) Within 60 days after the end of the production year ending August 3 1, 2007, each manufacturer choosing to certify vehicles manufactured during that production year as complying

with phase two of the advanced air bag requirements of Standard No. 208 shall submit a report to the National Highway Traffic Safety Administration as specified in this section.

(3) Each report shall –

(i) Identify the manufacturer;

(ii) State the full name, title. and address of the official responsible for preparing the report;

(iii) Identify the production year being reported on;

(iv) Provide the information specified in paragraph (c) of this section;

(v) Be written in the English language; and

(vi) Be submitted to: Administrator, National Highway Traffic Safety Administration, 400 Seventh Street, SW, Washington, DC 20590.

(b) Phase-in reporting requirements.

(1) Within 60 days after the end of the production years ending August 31, 2004, August 31, 2005, and August 31, 2006, each manufacturer shall submit a report to the National Highway Traffic Safety Administration regarding its compliance with phase one of the advanced air bag requirements of Standard No. 208 for its vehicles produced in that production year. Each report shall also specify the number of advance credit vehicles, if any, that are being applied to the production year being reported on.

(2) Within 60 days after the end of the production years ending August 31, 2008, August 31, 2009, and August 31, 2010, each manufacturer shall submit a report to the National Highway Traffic Safety Administration regarding its compliance with phase two of the advanced air bag requirements of Standard No. 208 for its vehicles produced in that production year. Each report

shall also specify the number of advance credit vehicles, if any, that are being applied to the production year being reported on.

(3) Each report shall --

(i) Identify the manufacturer;

(ii) State the full name, title, and address of the official responsible for preparing the report;

(iii) For limited line manufacturers, specify whether the manufacturer has elected to comply with S14.1(a) or S14.1(b), or S14.3(a) or S14.3(b) of 49 CFR 571.208, as applicable;

(iv) Identify the production year being reported on;

(v) Contain a statement regarding whether or not the manufacturer complied with phase one of the advanced air bag requirements of Standard No. 208 or phase two of the advanced air bag requirements of Standard No. 208, as applicable to the period covered by the report, and the basis for that statement;

(vi) Provide the information specified in paragraph (d) of this section;

(vii) Be written in the English language; and

(viii) Be submitted to: Administrator, National Highway Traffic Safety Administration, 400 Seventh Street, SW, Washington, DC 20590.

(c) Advanced credit phase-in report content.

(1) Production of complying vehicles.

(i) With respect to the reports identified in section 585.5(a)(1), each manufacturer shall report for the production year for which the report is filed the number of vehicles, by make and model year, that meet the applicable advanced air bag requirements of Standard No. 208, and to which advanced air bag requirements the vehicles are certified.

(ii) With respect to the report identified in section 585.5(a)(2), each manufacturer shall report the number of vehicles, by make and model year, that meet the applicable advanced air bag requirements of Standard No. 208, and to which advanced air bag requirements the vehicles are certified.

(2) Vehicles produced by more than one manufacturer. Each manufacturer whose reporting of information is affected by one or more of the express written contracts permitted by S 14.1.3.2 or S14.3.3.2 of Standard No. 208 shall:

(i) Report the existence of each contract, including the names of all parties to the contract and explain how the contract affects the report being submitted.

(ii) Report the number of vehicles covered by each contract in each production year.

(d) Phase-in report content.

(1) Basis for phase-in production requirements. For production years ending August 3 1, 2003, August 3 1, 2004, August 3 1, 2005, August 3 1, 2007, August 3 1, 2008, and August 3 1, 2009, each manufacturer shall provide the number of vehicles manufactured in the current production year, or, at the manufacturer's option, for the current production year and each of the prior two production years if the manufacturer has manufactured vehicles during both of the two production years prior to the year for which the report is being submitted.

(2) Production of complying vehicles. Each manufacturer shall report for the production year for which the report is tiled the number of vehicles, by make and model year, that meet the applicable advanced air bag requirements of Standard No. 208, and to which advanced air bag requirements the vehicles are certified.

(3) Vehicles produced by more than one manufacturer. Each manufacturer whose reporting of information is affected by one or more of the express written contracts permitted by S14.1.3.2 or S14.3.3.2 of Standard No. 208 shall:

(i) Report the existence of each contract, including the names of all parties to the contract and explain how the contract affects the report being submitted.

(ii) Report the number of vehicles covered by each contract in each production year.

§ 585.6 Records.

Each manufacturer shall maintain records of the Vehicle Identification Number of each vehicle for which information is reported under § 585.5(c)(1) and (d)(2) until December 31, 2011.

§ 585.7 Petitions to extend period to file report.

A petition for extension of the time to submit a report required under this part shall be received not later than 15 days before the report is due. The petition shall be submitted to: Administrator, National Highway Traffic Safety Administration, 400 Seventh Street, SW, Washington, DC 20590. The filing of a petition does not automatically extend the time for filing a report. A petition will be granted only if the petitioner shows good cause for the extension, and if the extension is consistent with the public interest.

PART 595--RETROFIT ON-OFF SWITCHES FOR AIR BAGS

7. The authority citation for part 595 continues to read as follows:

Authority: 49 U.S.C. 322, 30111, 30115, 30117, 30122 and 30166; delegation of authority at 49 CFR 1.50.

8. Section 595.5 is amended by revising paragraph (a) to read as follows:

§ 595.5 Requirements.

(a) Beginning January 19, 1998, a dealer or motor vehicle repair business may modify a motor vehicle manufactured before September 1, 2012 by installing an on-off switch that allows an occupant of the vehicle to turn off an air bag in that vehicle, subject to the conditions in paragraphs (b)(l) through (5) of this section.

* * * * *

Issued on: MAY- A 2000

Rosalyn G. Millman
Acting Administrator

Billing Code 4910-59-P