REVISION RECORD			
ITEM NO.	BY	DATE	DESCRIPTION
A	DW	6/6/02	REVISED TOLERANCE FORMAT, CHANGED SINGLE DECIMAL PLACE TOLERANCE FROM ±0.1/2.54 TO TO ±0.1/2.5, ADDED MATERIAL NOTE, CHANGED OUTPUT AT CAPACITY FROM 1 mV/V MIN. TO 0.75 mV/V MIN., CHANGED DIMENSION NOTE FROM "AXIS SYSTEM" TO "NEUTRAL AXIS"

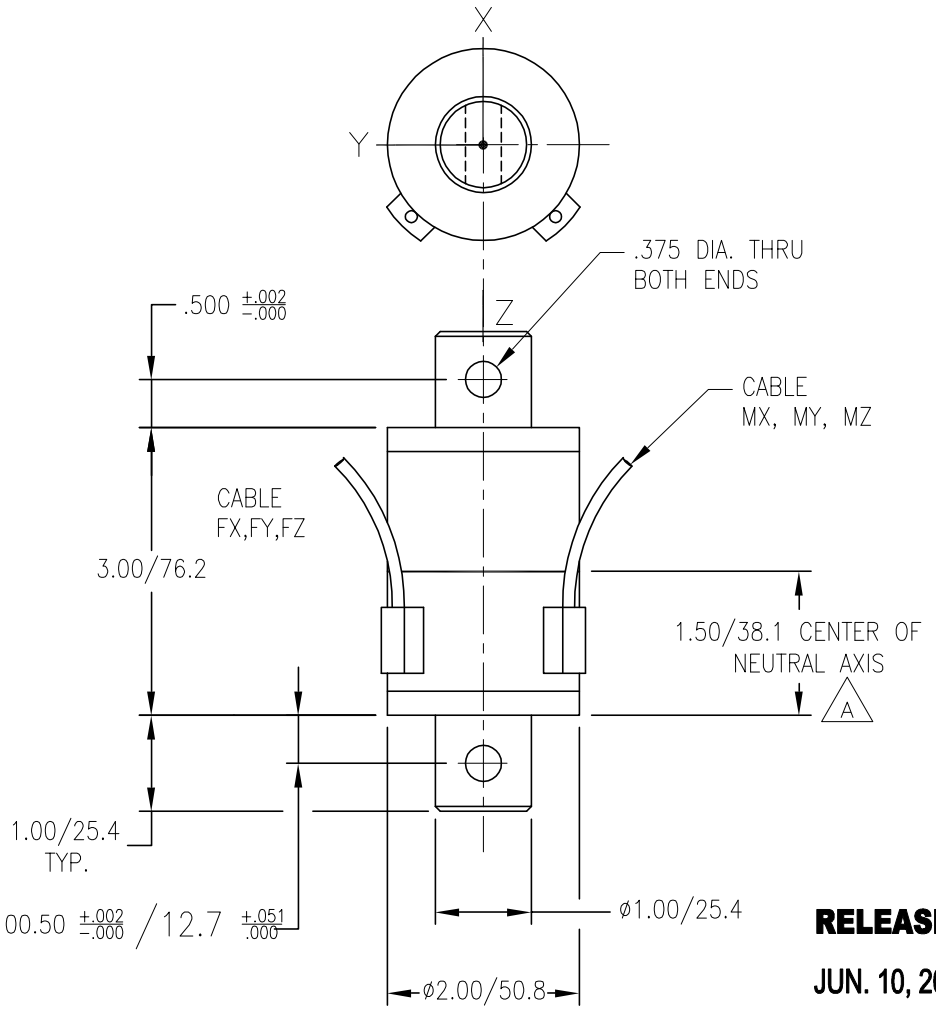

AXIS	CAPACITY
FX	3000 lbs./1119.73 kg.
FY	3000 lbs./1119.73 kg.
FZ	5000 lbs./1866.21 kg.
MX	3000 lb.–in./336 Nm.
MY	3000 lb.–in./336 Nm.
MZ	3000 lb.–in./336 Nm.

NONLINEARITY < 1% OF FULL SCALE
A CROSSTALK < 5% OF FULL SCALE
OUTPUT AT CAPACITY: 0.75 mV/V MIN.
WEIGHT: 2.50 lbs./1.13 kg. MAX.
WEIGHT INCLUDES APPROXIMATELY 8" OF CABLE LENGTH (EACH CABLE).
SIGNAL OUTPUT MUST BE COMPATIBLE WITH AND RECORDABLE IN A DATA CHANNEL AS DEFINED BY SAE J211.

FREE AIR RESONANT FREQUENCY
FORCE 3000 Hz MIN.
MOMENT 3000 Hz MIN.
OPERATING TEMPERATURE 0° TO 200° F
A THERMAL SENSITIVITY (60° TO 80° F) < .03% OF READING /F
MATERIAL: THE LOAD BEARING STRUCTURE OF THE LOAD CELL, INCLUDING PROVISIONS FOR THE LOAD CELL MOUNTING, ARE OF METAL OR METAL ALLOYS. NON–LOAD BEARING PARTS OF THE LOAD CELL, INTERNALLY AND/OR EXTERNALLY, INCLUDING WIRES AND THEIR ATTACHMENTS, MAY BE MADE OF ANY MATERIAL PROVIDING THEY DO NOT INTERFERE WITH THE PERFORMANCE OF THE LOAD CELL OR THE TRANSMISSION OF THE LOAD CELL SIGNALS.

RELEASED

JUN. 10, 2002

NHTSA

UNITS ARE in/mm

A TOLERANCES ARE: *

DECIMALS		ANGLES
.X	±0.1/2.5	+ 0.5°
.XX	±0.01/.25	
.XXX	±0.005/.127	

* unless otherwise noted

MATERIAL: SEE NOTES A
SCALE NONE

APPROVALS	DATE
DRAWN D.WALKER	1/14/00
CHECKED	
ENG H. P.	

NATIONAL HIGHWAY TRAFFIC SAFETY ADMINISTRATION

SIX–CHANNEL FEMUR LOAD CELL

HYBRID III – 5th FEMALE

SIZE	DRAWING NUMBER	REV
A	SA572–S29	A

REVISION RECORD			
REV	DESCRIPTION	DATE	BY

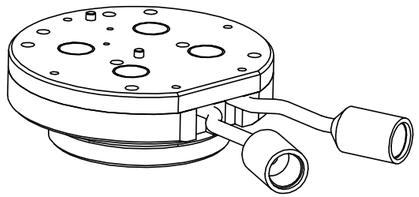

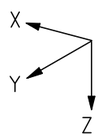

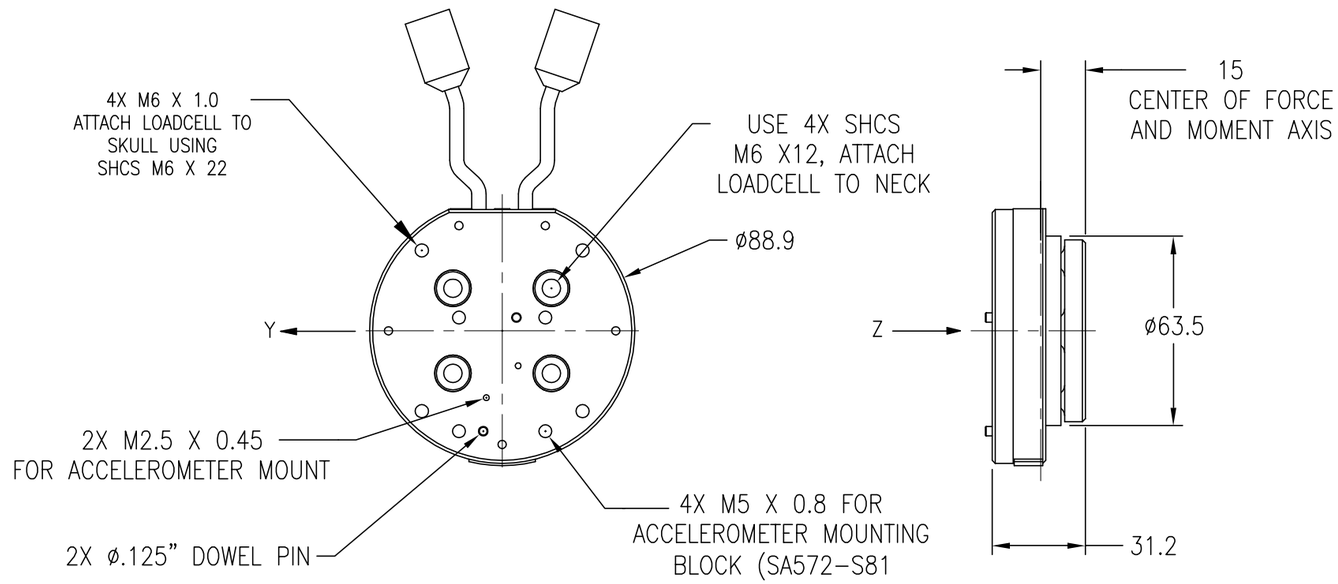

SPECIFICATIONS

AXIS	CAPACITY	
	lbf	N
F_X	2,248	10,000
F_Y	2,248	10,000
F_Z	3,372	15,000
	lb–in	Nm
M_X	2,655	300
M_Y	2,655	300
M_Z	2,655	300

OUTPUT AT CAPACITY: 0.75 mV/V MIN.

NONLINEARITY < 1% FULL SCALE
CROSSTALK < 5% FULL SCALE
WEIGHT: 1.32 lb./0.60 kg MAX.

SIGNAL OUTPUT MUST BE COMPATIBLE WITH AND RECORDABLE IN A DATA CHANNEL AS DEFINED BY SAE J211

FREE AIR RESONANT FREQUENCY FORCES 5000 Hz MIN.
MOMENTS 3000 Hz MIN.

OPERATING TEMPERATURE 0° TO 200°F
THERMAL SENSITIVITY (60° TO 80°F) ≤ .03% OF READING /°F

MATERIAL: THE LOAD BEARING STRUCTURE OF THE LOAD CELL, INCLUDING PROVISIONS FOR THE LOAD CELL MOUNTING, ARE OF METAL OR METAL ALLOYS, NON–LOAD BEARING PARTS OF THE LOAD CELL, INTERNALLY AND/OR EXTERNALLY, INCLUDING WIRES AND THEIR ATTACHMENTS, MAY BE MADE OF ANY MATERIAL PROVIDED THEY DO NOT INTERFERE WITH THE PREFORMANCE OF THE LOAD CELL OR THE TRANSMISSION OF THE LOAD CELL SIGNALS.

UNITS ARE mm

TOLERANCES ARE: *

DECIMALS	ANGLES
X ±0.5	± 0.5°
X.X ±0.1	MACHINED:
X.XX ±0.05	63

* unless otherwise noted

MATERIAL:		
SCALE 1.0 = 2.0		
APPROVALS	DATE	
DRAWN D. Walker	5/2/04	
CHECKED		
ENG		

NATIONAL HIGHWAY TRAFFIC SAFETY ADMINISTRATION

6 AXIS UPPER NECK LOAD CELL

EUROSID 2

SIZE	DRAWING NUMBER	REV
B	SA572–S70	

REVISION RECORD			
REV	DESCRIPTION	DATE	BY
A	NHTSA PART 572 NPRM RELEASE	7/30/04	DW

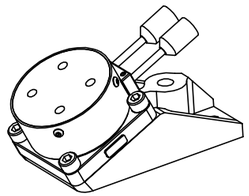

SCALE 0.250

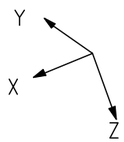

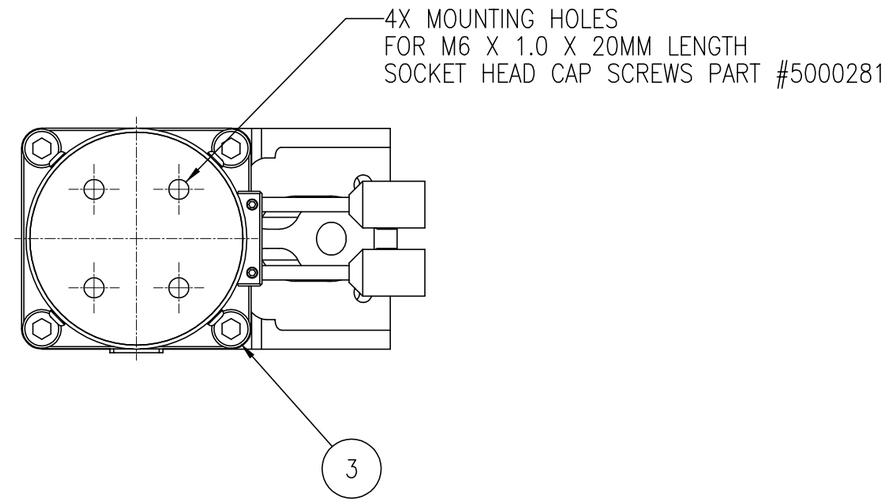

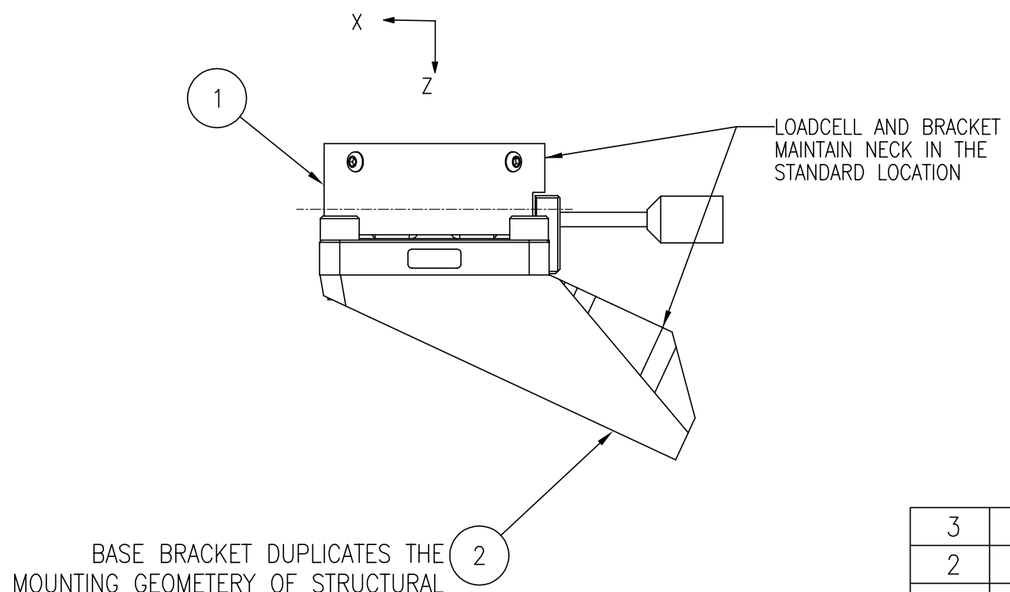

ITEM NO.	QTY.	PART NO.	DESCRIPTION	MATERIAL
3	1	5000075	SCREW, SHCS M8 x 1.25 x 20mm LG.	
2	1	SA572-S71-3	LOWER NECK LOAD CELL-MOUNTING BRACKET	
1	1	SA572-S71-2	LOWER NECK LOAD CELL	

UNITS ARE mm

TOLERANCES ARE: *

DECIMALS
.X ±2.5
.XX ±0.25
.XXX ±0.127

ANGLES
± 0.5°

MACHINED: 63

* unless otherwise noted

MATERIAL:

SCALE .5 = 1.0

APPROVALS	DATE
DRAWN D. WALKER	6/7/04
CHECKED	
ENG	

NATIONAL HIGHWAY TRAFFIC SAFETY ADMINISTRATION

LOWER NECK LOAD CELL ASSEMBLY

EUROSID 2

SIZE	DRAWING NUMBER	REV
B	SA572-S71-1	A

REVISION RECORD			
REV	DESCRIPTION	DATE	BY
A	NHTSA PART 572 NPRM RELEASE	7/30/04	DW

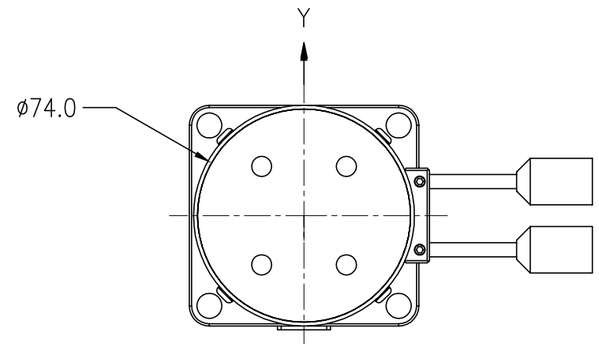

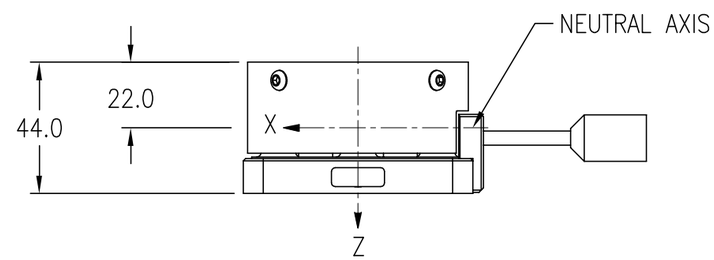

SPECIFICATIONS

AXIS	CAPACITY	
	lbf	KN
F_X	2,698	12
F_Y	2,698	12
F_Z	3,147	14
	lb–in	Nm
M_X	3,983	450
M_Y	3,983	450
M_Z	2,655	300

OUTPUT AT CAPACITY: 0.75 mV/V MIN.

NONLINEARITY < 1% FULL SCALE
CROSSTALK < 5% FULL SCALE
WEIGHT: 1.76 lb./0.798 kg MAX.

SIGNAL OUTPUT MUST BE COMPATIBLE WITH AND RECORDABLE IN A DATA CHANNEL AS DEFINED BY SAE J211

FREE AIR RESONANT FREQUENCY FORCES 5000 Hz MIN.
MOMENTS 3000 Hz MIN.

OPERATING TEMPERATURE 0° TO 200°F
THERMAL SENSITIVITY (60° TO 80°F) ≤ .03% OF READING /°F

MATERIAL: THE LOAD BEARING STRUCTURE OF THE LOAD CELL, INCLUDING PROVISIONS FOR THE LOAD CELL MOUNTING, ARE OF METAL OR METAL ALLOYS, NON–LOAD BEARING PARTS OF THE LOAD CELL, INTERNALLY AND/OR EXTERNALLY, INCLUDING WIRES AND THEIR ATTACHMENTS, MAY BE MADE OF ANY MATERIAL PROVIDED THEY DO NOT INTERFERE WITH THE PREFORMANCE OF THE LOAD CELL OR THE TRANSMISSION OF THE LOAD CELL SIGNALS.

UNITS ARE mm

TOLERANCES ARE: *

DECIMALS	ANGLES
.X ±2.5	± 0.5°
.XX ±0.25	MACHINED: 63
.XXX ±0.127	

* unless otherwise noted

MATERIAL:	
SCALE .5 = 1.0	
APPROVALS	DATE
DRAWN D. WALKER	6/7/04
CHECKED	
ENG	

NATIONAL HIGHWAY TRAFFIC SAFETY ADMINISTRATION

LOWER NECK LOAD CELL

EUROSID 2

SIZE	DRAWING NUMBER	REV
B	SA572–S71–2	A

REVISION RECORD			
REV.	DESCRIPTION	DATE	BY
A	NHTSA PART 575 NPRM RELEASE	7/30/04	DW

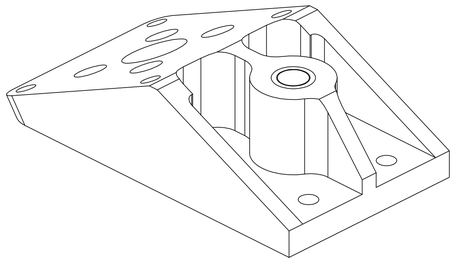

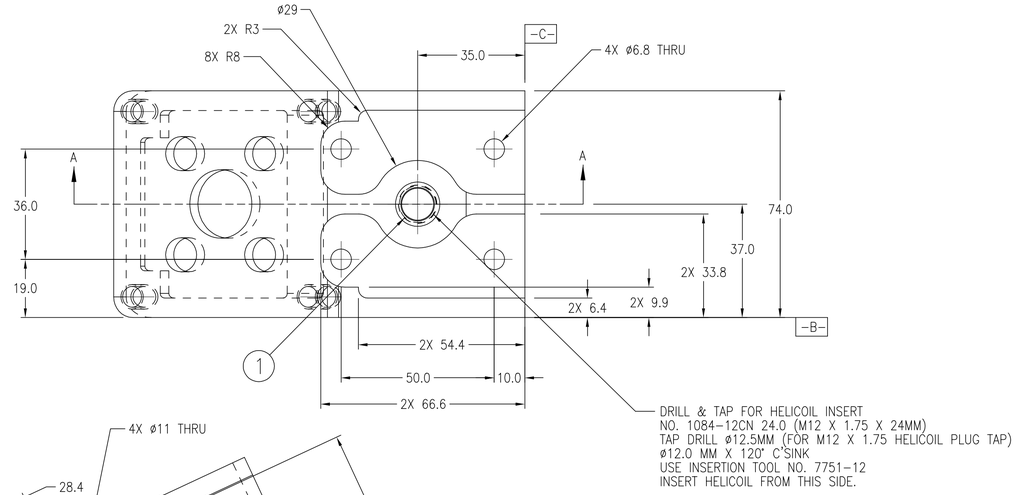

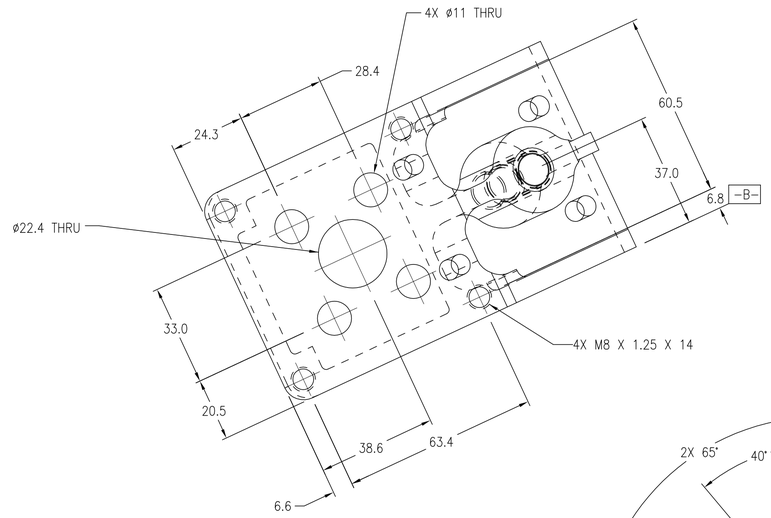

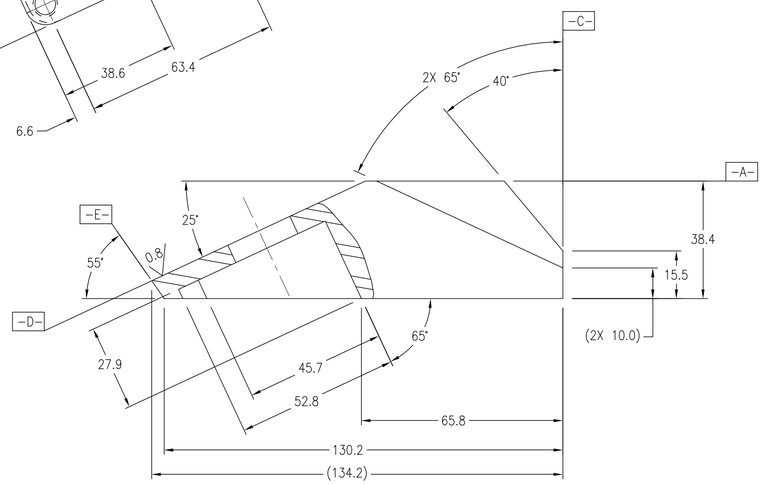

SECTION A-A (PARTIAL)

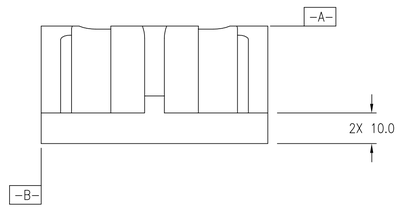

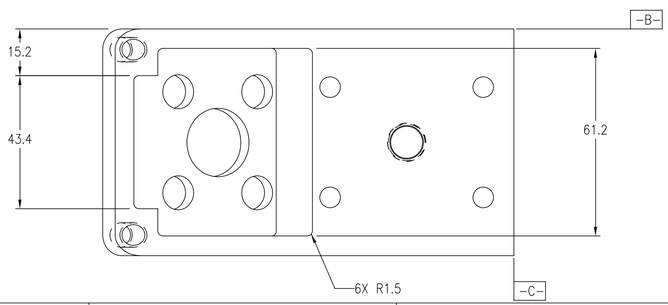

NOTES:

1. REMOVE ALL BURRS AND BREAK ALL SHARP EDGES.
2. STAMP OR ETCH PART NUMBER AND REVISION LETTER.

ITEM NO.	QTY	PART NO.	DESCRIPTION
1	1	5000043	HELICOIL, M12 X 1.75 X 24

PART LIST

UNITS ARE millimeters

TOLERANCES ARE: *

DECIMALS: X ±0.5, .X ±0.1, .XX ±0.05

ANGLES: ±0.5°

MACHINED: 63

* unless otherwise noted

MATERIAL: 6061-T6 ALUMINUM

SCALE: 1.000

APPROVALS	DATE
DRAWN	
CHECKED	
ENGINEER	

NATIONAL HIGHWAY TRAFFIC SAFETY ADMINISTRATION

LOWER NECK LOAD CELL - MOUNTNG BRACKET

EUROSID 2

SIZE: A1 | SHEET: 1 OF 1 | DRAWING NUMBER: SA572-S71-3 | REV.: A

REVISION RECORD			
REV	DESCRIPTION	DATE	BY

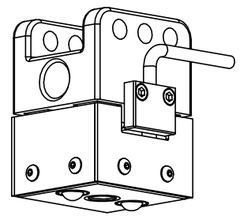

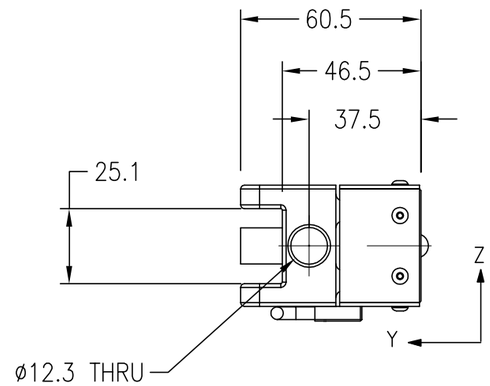

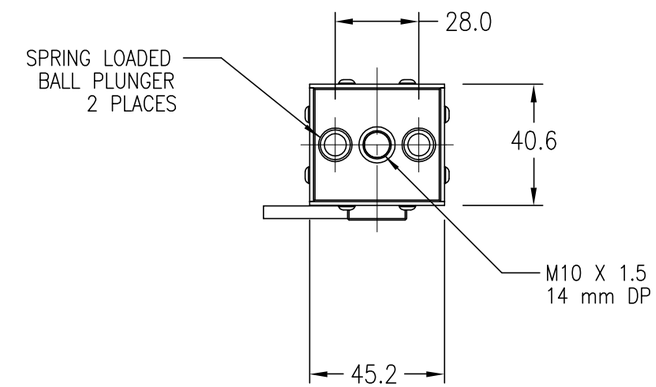

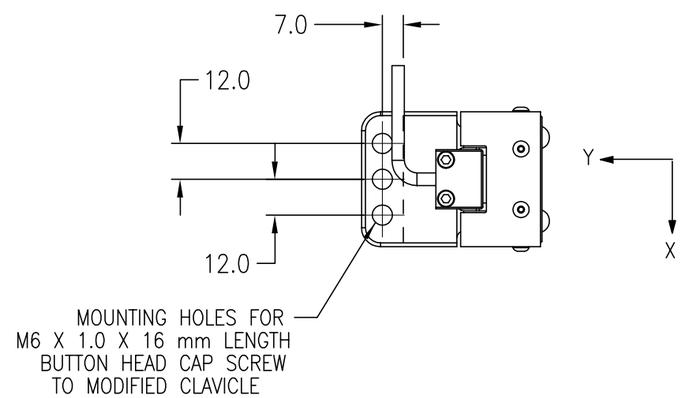

SPECIFICATIONS

AXIS	CAPACITY	
	lbf	N
F_X	899	4,000
F_Y	1,799	8,000
F_Z	899	4,000

OUTPUT AT CAPACITY: 0.75 mV/V MIN.

NONLINEARITY < 1% FULL SCALE
CROSSTALK < 5% FULL SCALE
WEIGHT: 0.47 lb./0.213 kg MAX.

SIGNAL OUTPUT MUST BE COMPATIBLE WITH AND RECORDABLE IN A DATA CHANNEL AS DEFINED BY SAE J211

FREE AIR RESONANT FREQUENCY FORCES 5000 Hz MIN.
MOMENTS 3000 Hz MIN.

OPERATING TEMPERATURE 0° TO 200°F
THERMAL SENSITIVITY (60° TO 80°F) ≤ .03% OF READING /°F

MATERIAL: THE LOAD BEARING STRUCTURE OF THE LOAD CELL, INCLUDING PROVISIONS FOR THE LOAD CELL MOUNTING, ARE OF METAL OR METAL ALLOYS, NON-LOAD BEARING PARTS OF THE LOAD CELL, INTERNALLY AND/OR EXTERNALLY, INCLUDING WIRES AND THEIR ATTACHMENTS, MAY BE MADE OF ANY MATERIAL PROVIDED THEY DO NOT INTERFERE WITH THE PREFORMANCE OF THE LOAD CELL OR THE TRANSMISSION OF THE LOAD CELL SIGNALS.

UNITS ARE mm

TOLERANCES ARE: *

DECIMALS	ANGLES
X ±0.5	± 0.5°
X.X ±0.1	MACHINED:
X.XX ±0.05	63

* unless otherwise noted

MATERIAL:		
SCALE 0.5 = 1.0		
APPROVALS	DATE	
DRAWN D. Walker	5/3/04	
CHECKED		
ENG		

NATIONAL HIGHWAY TRAFFIC SAFETY ADMINISTRATION

3 AXIS SHOULDER LOAD CELL

EUROSID 2

SIZE	DRAWING NUMBER	REV
B	SA572-S72	

REVISION RECORD			
REV	DESCRIPTION	DATE	BY
A	NHTSA PART 572 NPRM RELEASE	7/30/04	DW

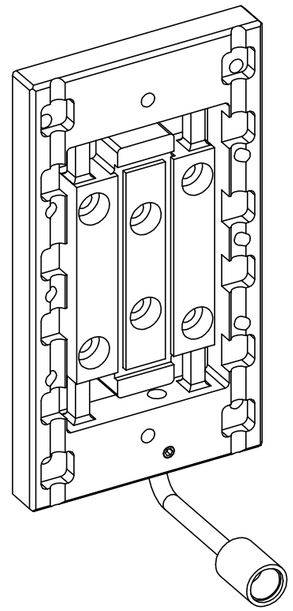

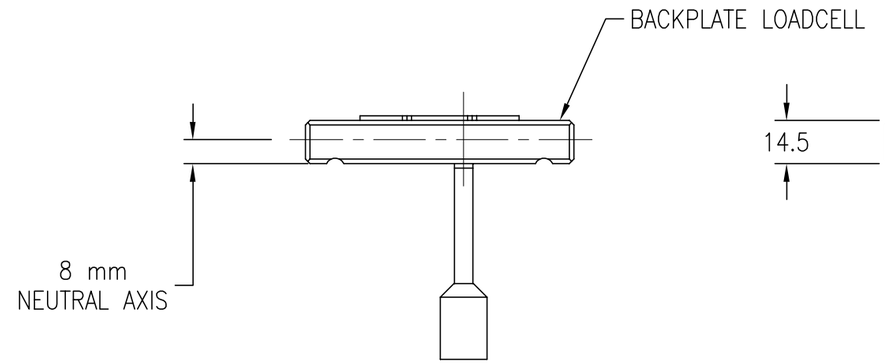

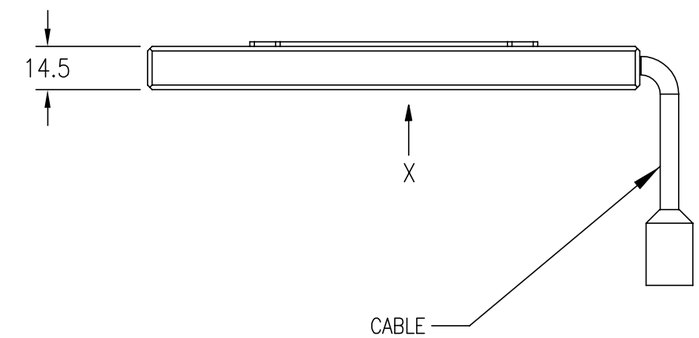

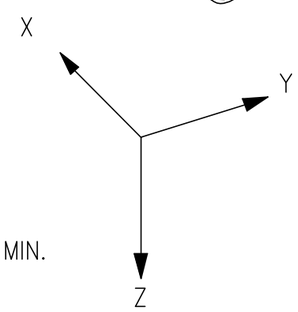

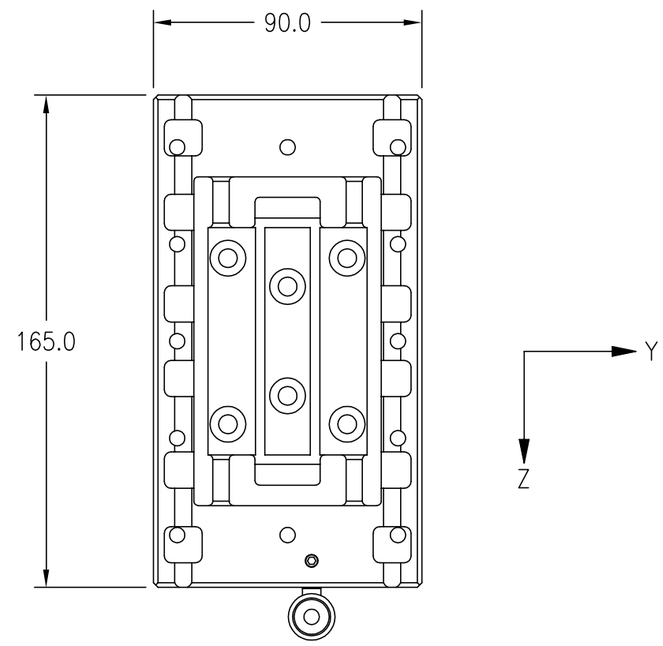

SPECIFICATIONS

AXIS	CAPACITY	
	lbf	N
F_X	674	3,000
F_Y	674	3,000
	lb–in	Nm
M_Y	1,416	160
M_Z	1,416	160

OUTPUT AT CAPACITY: 0.75 mV/V MIN.

NONLINEARITY < 1% FULL SCALE
CROSSTALK < 5% FULL SCALE
WEIGHT: 6.83 lb./3.10 kg MAX.

SIGNAL OUTPUT MUST BE COMPATIBLE WITH AND RECORDABLE IN A DATA CHANNEL AS DEFINED BY SAE J211

FREE AIR RESONANT FREQUENCY FORCES 5000 Hz MIN.
MOMENTS 3000 Hz MIN.

OPERATING TEMPERATURE 0° TO 200°F
THERMAL SENSITIVITY (60° TO 80°F) ≤ .03% OF READING /°F

MATERIAL: THE LOAD BEARING STRUCTURE OF THE LOAD CELL, INCLUDING PROVISIONS FOR THE LOAD CELL MOUNTING, ARE OF METAL OR METAL ALLOYS, NON–LOAD BEARING PARTS OF THE LOAD CELL, INTERNALLY AND/OR EXTERNALLY, INCLUDING WIRES AND THEIR ATTACHMENTS, MAY BE MADE OF ANY MATERIAL PROVIDED THEY DO NOT INTERFERE WITH THE PREFORMANCE OF THE LOAD CELL OR THE TRANSMISSION OF THE LOAD CELL SIGNALS.

UNITS ARE mm

TOLERANCES ARE: *

DECIMALS	ANGLES
X ±0.5	± 0.5°
X.X ±0.1	MACHINED: 63
X.XX ±0.05	

* unless otherwise noted

MATERIAL:		
SCALE 0.25 = 1.0		
APPROVALS	DATE	
DRAWN D. Walker	5/3/04	
CHECKED		
ENG		

NATIONAL HIGHWAY TRAFFIC SAFETY ADMINISTRATION

4 AXIS BACKPLATE LOAD CELL

EUROSID 2

SIZE	DRAWING NUMBER	REV
B	SA572–S73	A

REVISION RECORD			
REV	DESCRIPTION	DATE	BY

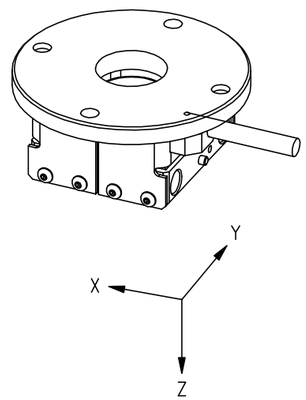

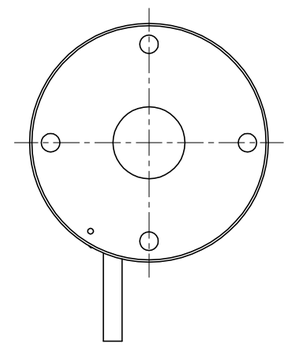

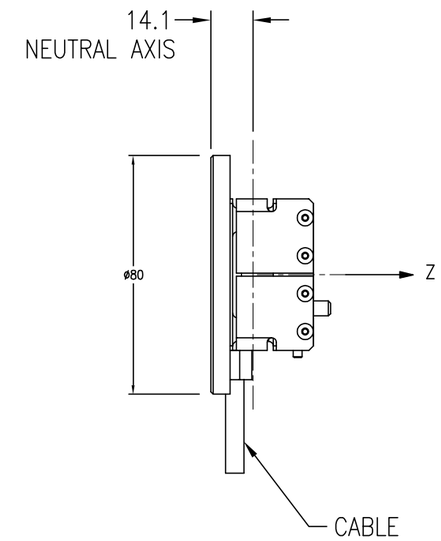

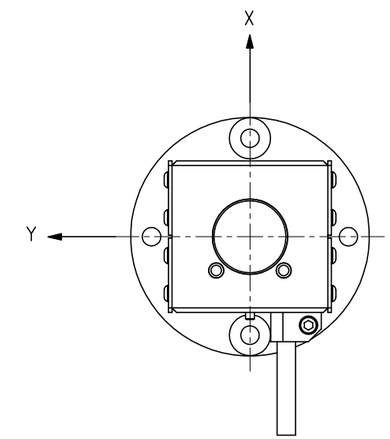

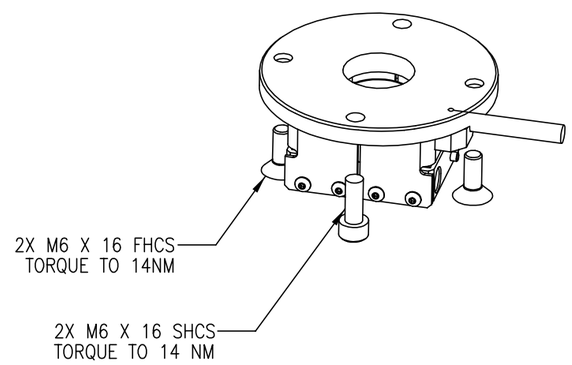

SPECIFICATIONS

AXIS	CAPACITY	
	lbf	KN
F_X	3,147	14
F_Y	3,147	14
	lb–in	Nm
M_X	8,851	1,000
M_Y	8,851	1,000

OUTPUT AT CAPACITY: 0.75 mV/V MIN.

NONLINEARITY < 1% FULL SCALE
CROSSTALK < 5% FULL SCALE
WEIGHT: 1.10 lb./0.50 kg MAX.

SIGNAL OUTPUT MUST BE COMPATIBLE WITH AND RECORDABLE IN A DATA CHANNEL AS DEFINED BY SAE J211

FREE AIR RESONANT FREQUENCY FORCES 5000 Hz MIN.
MOMENTS 3000 Hz MIN.

OPERATING TEMPERATURE 0° TO 200°F
THERMAL SENSITIVITY (60° TO 80°F) ≤ .03% OF READING /°F

MATERIAL: THE LOAD BEARING STRUCTURE OF THE LOAD CELL, INCLUDING PROVISIONS FOR THE LOAD CELL MOUNTING, ARE OF METAL OR METAL ALLOYS, NON–LOAD BEARING PARTS OF THE LOAD CELL, INTERNALLY AND/OR EXTERNALLY, INCLUDING WIRES AND THEIR ATTACHMENTS, MAY BE MADE OF ANY MATERIAL PROVIDED THEY DO NOT INTERFERE WITH THE PREFORMANCE OF THE LOAD CELL OR THE TRANSMISSION OF THE LOAD CELL SIGNALS.

UNITS ARE mm

TOLERANCES ARE: *

DECIMALS	ANGLES
X ±0.5	± 0.5°
X.X ±0.1	MACHINED: 63
X.XX ±0.05	

* unless otherwise noted

MATERIAL:		
SCALE 0.5 = 1.0		
APPROVALS	DATE	
DRAWN D. Walker	5/3/04	
CHECKED		
ENG		

NATIONAL HIGHWAY TRAFFIC SAFETY ADMINISTRATION

T12 LOAD CELL

EUROSID 2

SIZE	DRAWING NUMBER	REV
B	SA572–S74	

REVISION RECORD			
REV	DESCRIPTION	DATE	BY
A	NHTSA PART 572 NPRM RELEASE	7/30/04	DW

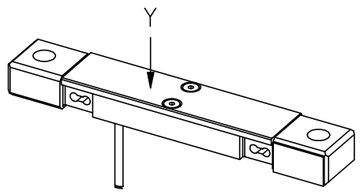

SCALE 0.500

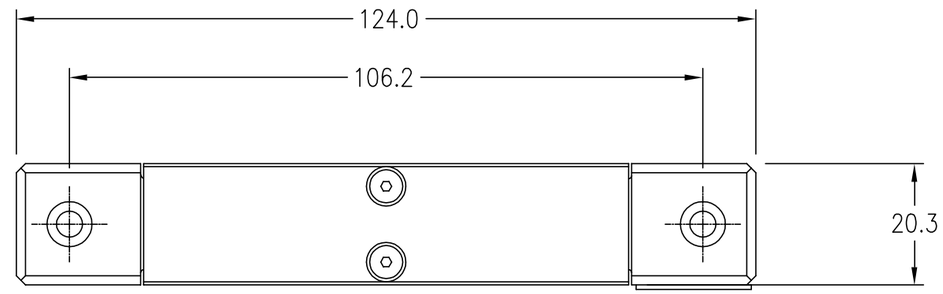

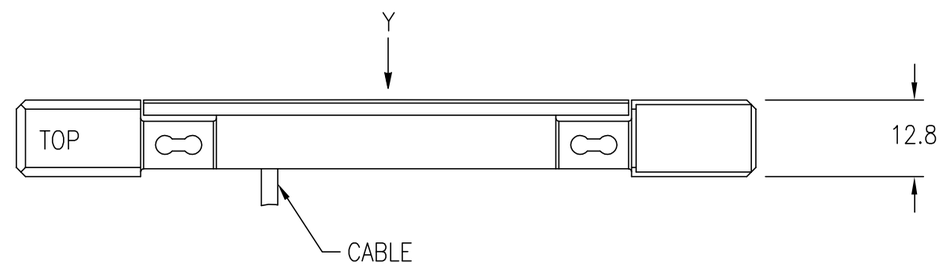

SPECIFICATIONS

AXIS	CAPACITY	
	lbf	N
F_y	1,124	5,000

OUTPUT AT CAPACITY: 0.75 mV/V MIN.

NONLINEARITY < 1% FULL SCALE
CROSSTALK < 5% FULL SCALE
WEIGHT: 0.45 lb./0.204 kg MAX.

SIGNAL OUTPUT MUST BE COMPATIBLE WITH AND RECORDABLE IN A DATA CHANNEL AS DEFINED BY SAE J211

FREE AIR RESONANT FREQUENCY FORCES 5000 Hz MIN.
MOMENTS 3000 Hz MIN.

OPERATING TEMPERATURE −65° TO +250°F
THERMAL SENSITIVITY (60° TO 80°F) ≤ .03% OF READING /°F

MATERIAL: THE LOAD BEARING STRUCTURE OF THE LOAD CELL, INCLUDING PROVISIONS FOR THE LOAD CELL MOUNTING, ARE OF METAL OR METAL ALLOYS, NON−LOAD BEARING PARTS OF THE LOAD CELL, INTERNALLY AND/OR EXTERNALLY, INCLUDING WIRES AND THEIR ATTACHMENTS, MAY BE MADE OF ANY MATERIAL PROVIDED THEY DO NOT INTERFERE WITH THE PREFORMANCE OF THE LOAD CELL OR THE TRANSMISSION OF THE LOAD CELL SIGNALS.

UNITS ARE mm

TOLERANCES ARE: *
DECIMALS
.X ±2.5
.XX ±0.25
.XXX ±0.127
ANGLES
± 0.5°
MACHINED: 63

* unless otherwise noted

MATERIAL:	
SCALE 1 = 1	
APPROVALS	DATE
DRAWN D. Walker	5/3/04
CHECKED	
ENG	

NATIONAL HIGHWAY TRAFFIC SAFETY ADMINISTRATION

UNIAXIAL ABDOMEN LOAD CELL

EUROSID 2

SIZE	DRAWING NUMBER	REV
B	SA572−S75	A

REVISION RECORD			
REV.	DESCRIPTION	DATE	BY
A	NHTSA PART 575 NPRM RELEASE	7/30/04	DW

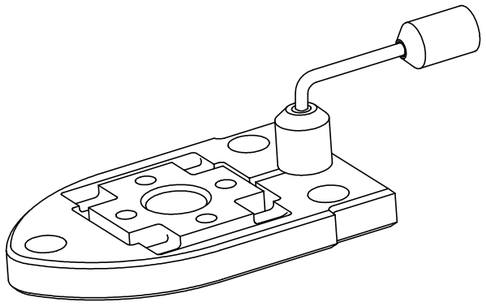

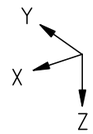

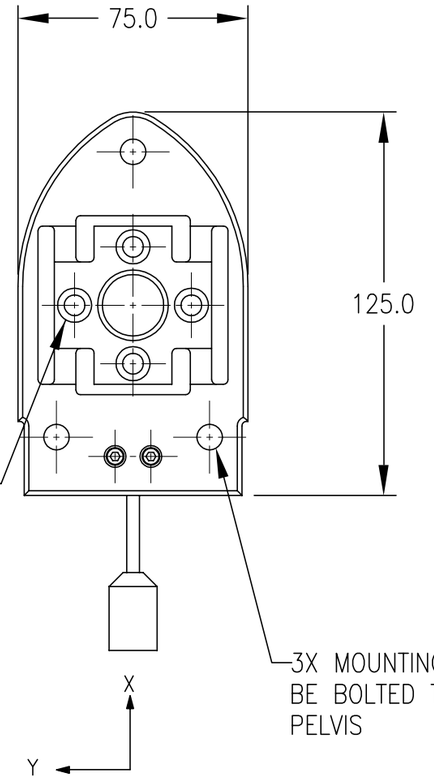

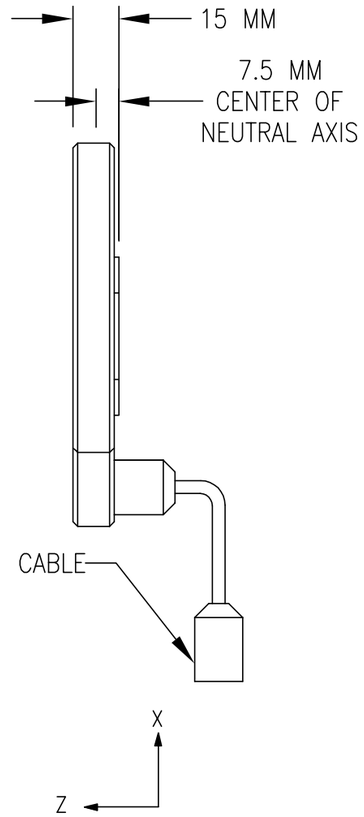

SPECIFICATIONS

AXIS	CAPACITY	
	lbf	N
F_X	1,012	4,500
F_Y	1,012	4,500
	lb-in	Nm
M_X	1,770	200

OUTPUT AT CAPACITY: 0.75 mV/V MIN.

NONLINEARITY < 1% FULL SCALE
CROSSTALK < 5% FULL SCALE
WEIGHT: 0.55 lb./0.25 kg MAX.

SIGNAL OUTPUT MUST BE COMPATIBLE WITH AND RECORDABLE IN A DATA CHANNEL AS DEFINED BY SAE J211

FREE AIR RESONANT FREQUENCY FORCES 5000 Hz MIN.
MOMENTS 3000 Hz MIN.

OPERATING TEMPERATURE 0° TO 200°F
THERMAL SENSITIVITY (-65° TO 250°F) ≤ .03% OF READING /°F

MATERIAL: THE LOAD BEARING STRUCTURE OF THE LOAD CELL, INCLUDING PROVISIONS FOR THE LOAD CELL MOUNTING, ARE OF METAL OR METAL ALLOYS, NON-LOAD BEARING PARTS OF THE LOAD CELL, INTERNALLY AND/OR EXTERNALLY, INCLUDING WIRES AND THEIR ATTACHMENTS, MAY BE MADE OF ANY MATERIAL PROVIDED THEY DO NOT INTERFERE WITH THE PREFORMANCE OF THE LOAD CELL OR THE TRANSMISSION OF THE LOAD CELL SIGNALS.

ITEM NO.	QTY	PART NO.	DESCRIPTION

PART LIST

UNITS ARE millimeters

TOLERANCES ARE: *
DECIMALS:
X ±0.5
.X ±0.1
.XX ±0.05
ANGLES: ±0.5°
MACHINED: 63
* unless otherwise noted

MATERIAL
SCALE 0.500

APPROVALS	DATE
DRAWN	
CHECKED	
ENGINEER	

NATIONAL HIGHWAY TRAFFIC SAFETY ADMINISTRATION

LUMBAR LOAD CELL

SIZE	SHEET	DRAWING NUMBER	REV.
A3	1 OF 1	SA572-S76	A

REVISION RECORD			
REV	DESCRIPTION	DATE	BY
A	NHTSA PART 572 NPRM RELEASE	7/30/04	DW

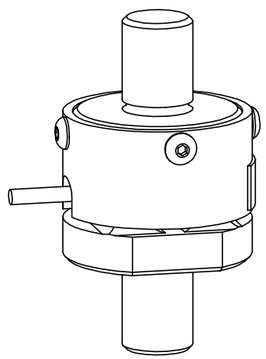

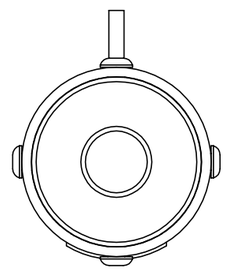

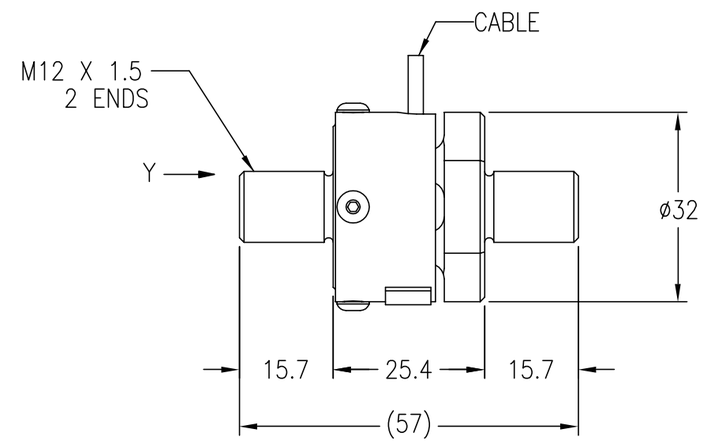

SPECIFICATIONS

AXIS	CAPACITY	
	lbf	N
F_y	450	2,000

OUTPUT AT CAPACITY: 0.75 mV/V MIN.

NONLINEARITY < 1% FULL SCALE
CROSSTALK < 5% FULL SCALE
WEIGHT: 0.28 lb./0.127 kg MAX.

SIGNAL OUTPUT MUST BE COMPATIBLE WITH AND RECORDABLE IN A DATA CHANNEL AS DEFINED BY SAE J211

FREE AIR RESONANT FREQUENCY FORCES 5000 Hz MIN.
MOMENTS 3000 Hz MIN.

OPERATING TEMPERATURE −65° TO +250°F
THERMAL SENSITIVITY (60° TO 80°F) ≤ .03% OF READING /°F

MATERIAL: THE LOAD BEARING STRUCTURE OF THE LOAD CELL, INCLUDING PROVISIONS FOR THE LOAD CELL MOUNTING, ARE OF METAL OR METAL ALLOYS, NON−LOAD BEARING PARTS OF THE LOAD CELL, INTERNALLY AND/OR EXTERNALLY, INCLUDING WIRES AND THEIR ATTACHMENTS, MAY BE MADE OF ANY MATERIAL PROVIDED THEY DO NOT INTERFERE WITH THE PREFORMANCE OF THE LOAD CELL OR THE TRANSMISSION OF THE LOAD CELL SIGNALS.

UNITS ARE mm

TOLERANCES ARE: *

DECIMALS	ANGLES
X ±0.5	± 0.5°
X.X ±0.1	MACHINED:
X.XX ±0.05	63

* unless otherwise noted

MATERIAL:		
SCALE 1 = 1		
APPROVALS	DATE	
DRAWN D. Walker	5/3/04	
CHECKED		
ENG		

NATIONAL HIGHWAY TRAFFIC SAFETY ADMINISTRATION

PUBIC LOAD CELL

EUROSID 2

SIZE	DRAWING NUMBER	REV
B	SA572−S77	A

REVISION RECORD			
REV	DESCRIPTION	DATE	BY
A	NHTSA PART 572 NPRM RELEASE	7/30/04	DW

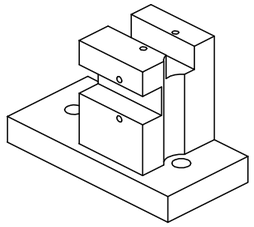

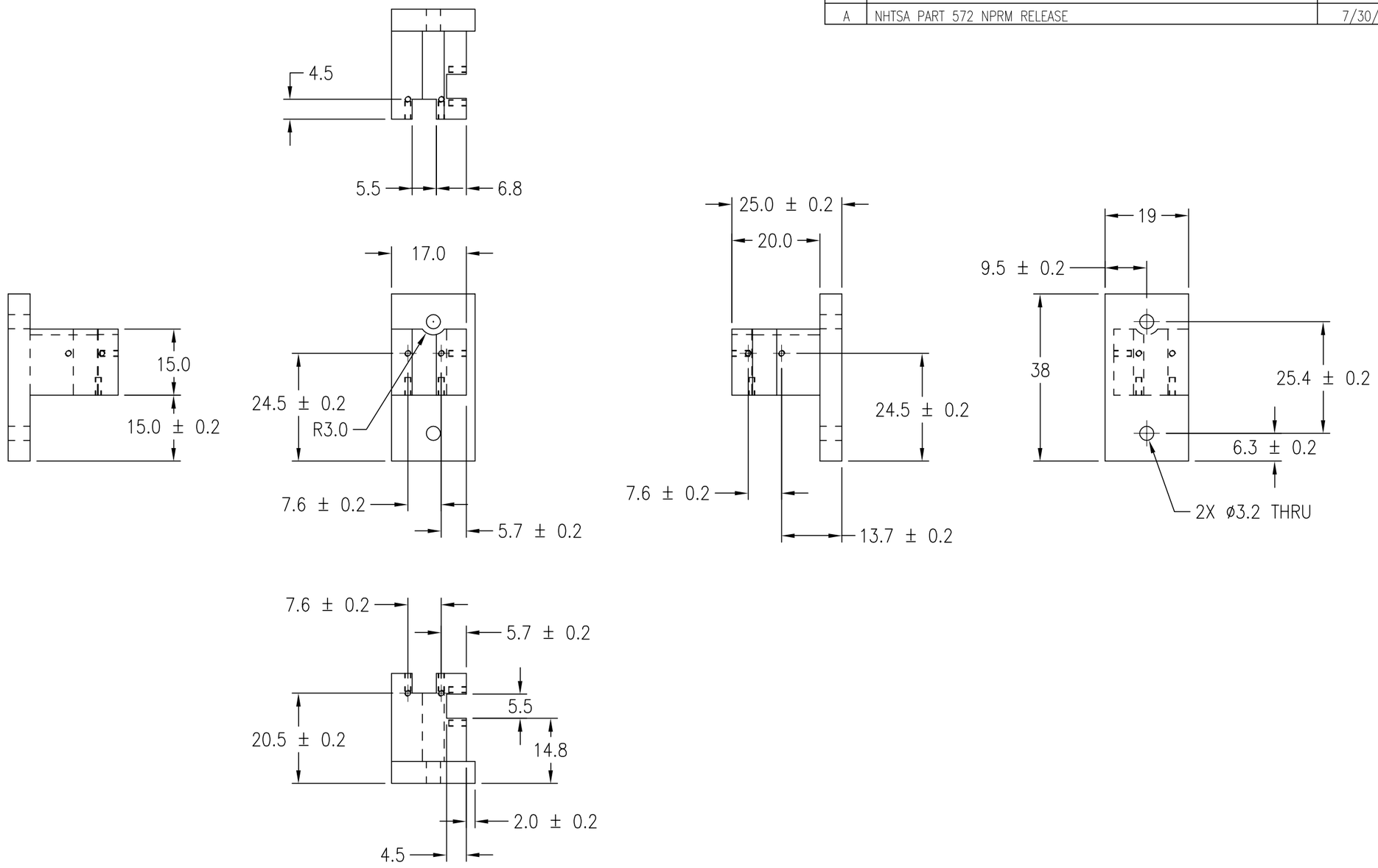

NOTES:

1. REMOVE BURRS AND BREAK SHARP EDGES.

UNITS ARE mm

TOLERANCES ARE: *

DECIMALS	ANGLES
X ±0.5	± 0.5°
X.X ±0.1	MACHINED:
X.XX ±0.05	63

* unless otherwise noted

MATERIAL: ALUM. 6061-T6	
SCALE 1 = 1	
APPROVALS	DATE
DRAWN D. Walker	4/30/04
CHECKED	
ENG	

NATIONAL HIGHWAY TRAFFIC SAFETY ADMINISTRATION

ACCEL MOUNTING BLOCK, UPPER SPINE/PELVIS SA572-S4

EUROSID 2

SIZE	DRAWING NUMBER	REV
B	SA572-S82	A

REVISION RECORD			
REV	DESCRIPTION	DATE	BY
A	NHTSA PART 572 NPRM RELEASE	7/30/04	DW

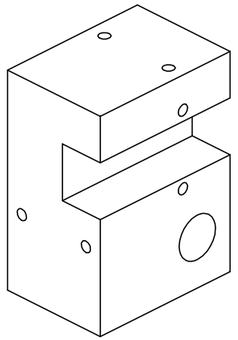

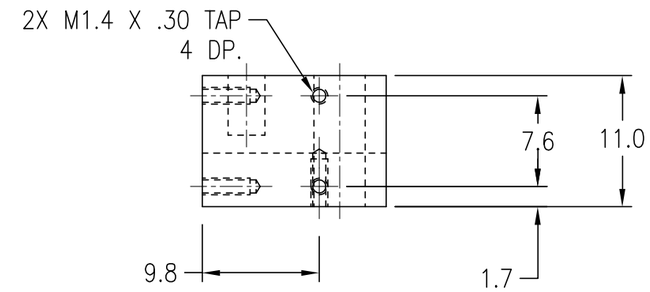

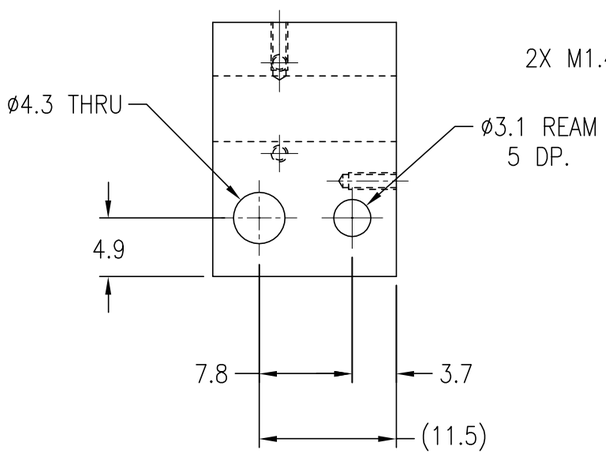

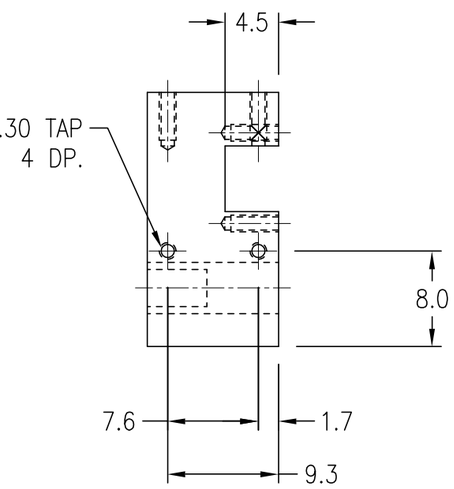

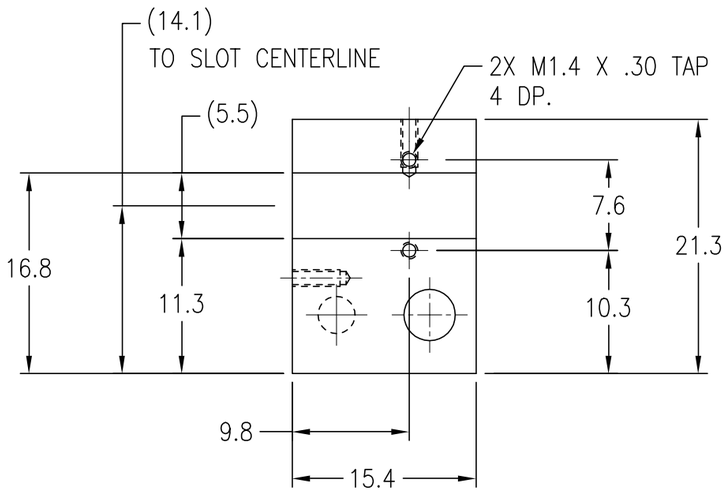

NOTES:
1. REMOVE ALL BURRS AND BREAK ALL SHARP EDGES.
2. MACHINE FINISH SHALL NOT EXCEED 0.8
3. FINISH: GOLD ANODIZE.

UNITS ARE mm

TOLERANCES ARE: *

DECIMALS	ANGLES
X ±0.5	± 0.5°
X.X ±0.1	MACHINED: 63
X.XX ±0.05	

* unless otherwise noted

MATERIAL: ALUM. 6061-T6		
SCALE 2 = 1		
APPROVALS	DATE	
DRAWN D. Walker	4/30/04	
CHECKED		
ENG		

NATIONAL HIGHWAY TRAFFIC SAFETY ADMINISTRATION

ACCEL MOUNT BLOCK, SPINE T12 SA572-S4

EUROSID 2

SIZE	DRAWING NUMBER	REV
B	SA572-S83	A

REVISION RECORD			
REV.	DESCRIPTION	DATE	BY
A	NHTSA PART 575 NPRM RELEASE	7/30/04	DW

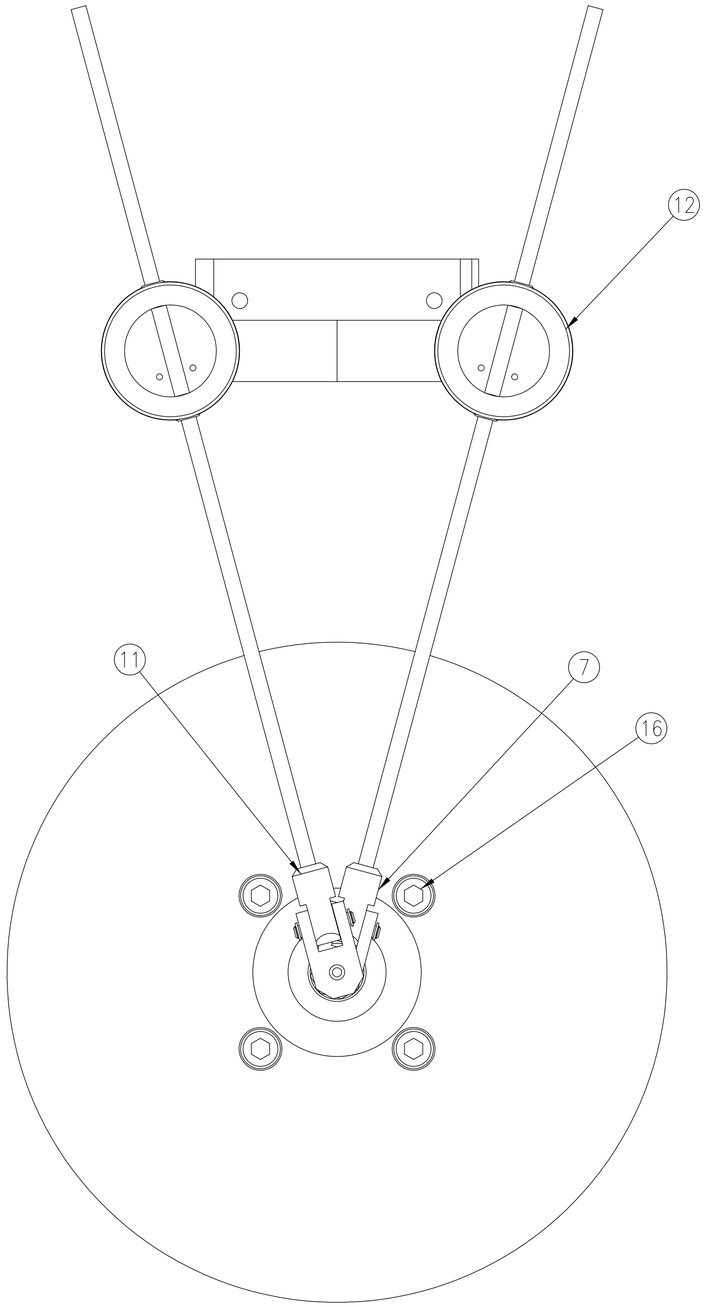

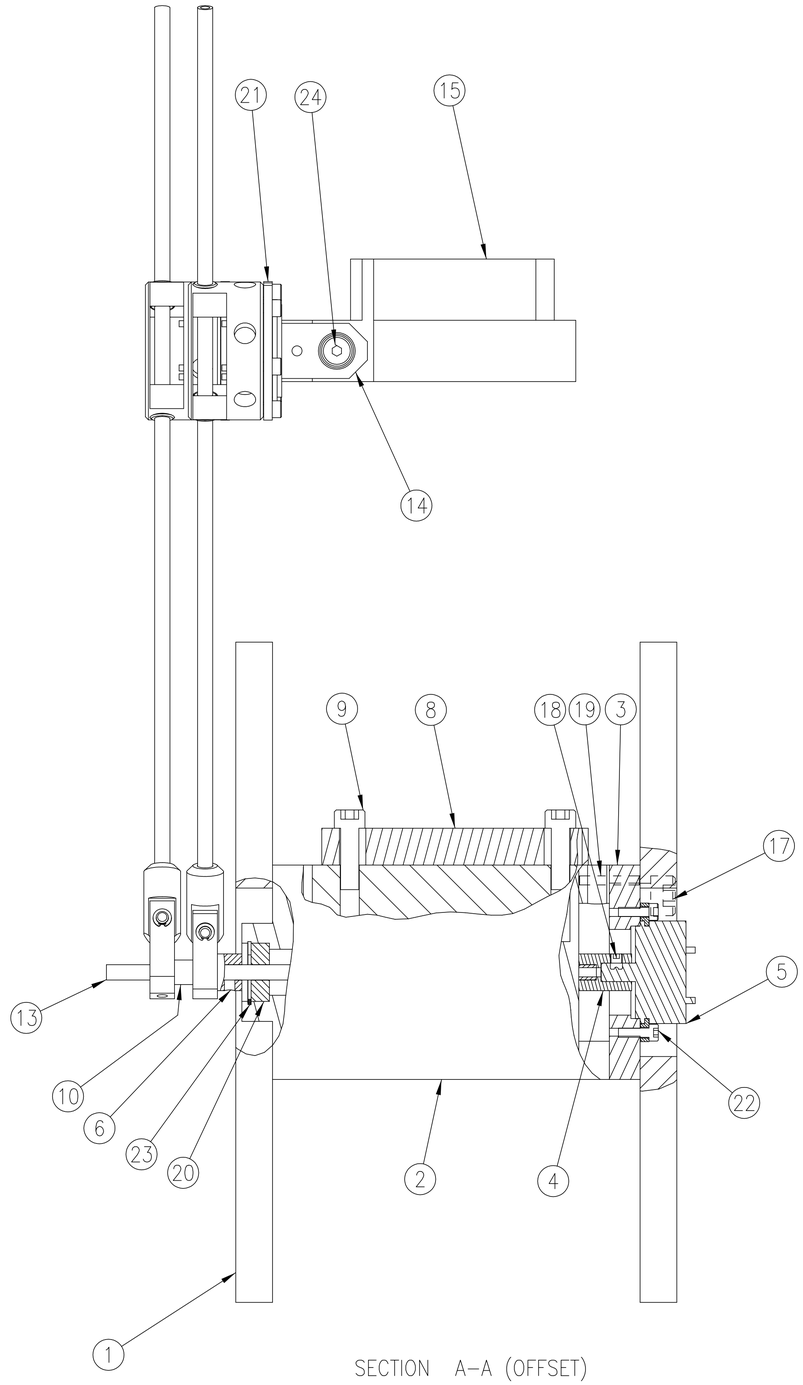

SECTION A–A (OFFSET)

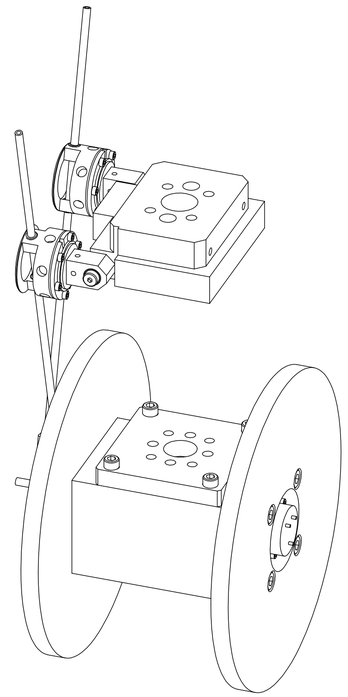

SCALE 0.500

ITEM NO.	QTY	PART NO.	DESCRIPTION
24	2	5000079	SCREW, SHSS M6 X 16
23	1	5000558	RETAINING RING, 19 x 1
22	6	5000119	SCREW, SHCS M3 X .5 X 10
21	1	175–9022	POTENTIOMETER CLAMP
20	1	175–9028	BALL BEARING
19	4	5000389	PIN, DOWEL M3 X 20
18	1	5000406	SCREW, SSCP M4 X 0.7 X 5
17	4	5000372	SCREW, SHCS M8 X 1.25 X 30
16	4	5000075	SCREW, SHCS M8 X 1.25 X 20
15	1	175–9027	UPPER MOUNTING BASE
14	2	175–9024	COUPLING ASSEMBLY
13	1	175–9023	ARROW SHAFT
12	2	175–9019	POT ASSEMBLY
11	1	175–9017	ARROW SHAFT–PIVOT ASSEMBLY A
10	1	175–9016	SPACER
9	4	5000001	SCREW, SHCS M6 X 1 X 20
8	1	175–9029	NECK & LUMBAR SPINE MOUNTING BASE
7	1	175–9007	ARROW SHAFT–PIVOT ASSEMBLY B
6	1	175–9006	LOCK SPACER
5	1	SA572–S53	ROTARY POTENTIOMETER, MCB H33A
4	1	175–9004	COUPLING
3	1	175–9003	COVER
2	1	175–9002	CENTRAL PART
1	2	175–9001	DISC

PART LIST

UNITS ARE millimeters

TOLERANCES ARE: *

DECIMALS:
X ±0.5
.X ±0.1
.XX ±0.05

ANGLES: ±0.5°

MACHINED: 63

* unless otherwise noted

MATERIAL

SCALE 1.000

APPROVALS	DATE
DRAWN	
CHECKED	
ENGINEER	

NATIONAL HIGHWAY TRAFFIC SAFETY ADMINISTRATION

HEADFORM

SIZE	SHEET	DRAWING NUMBER	REV.
A1	1 OF 1	175–9000	A

REVISION RECORD			
REV.	DESCRIPTION	DATE	BY
A	NHTSA PART 575 NPRM RELEASE	7/30/04	DW

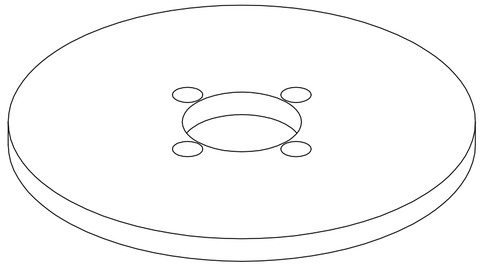

SCALE 0.500

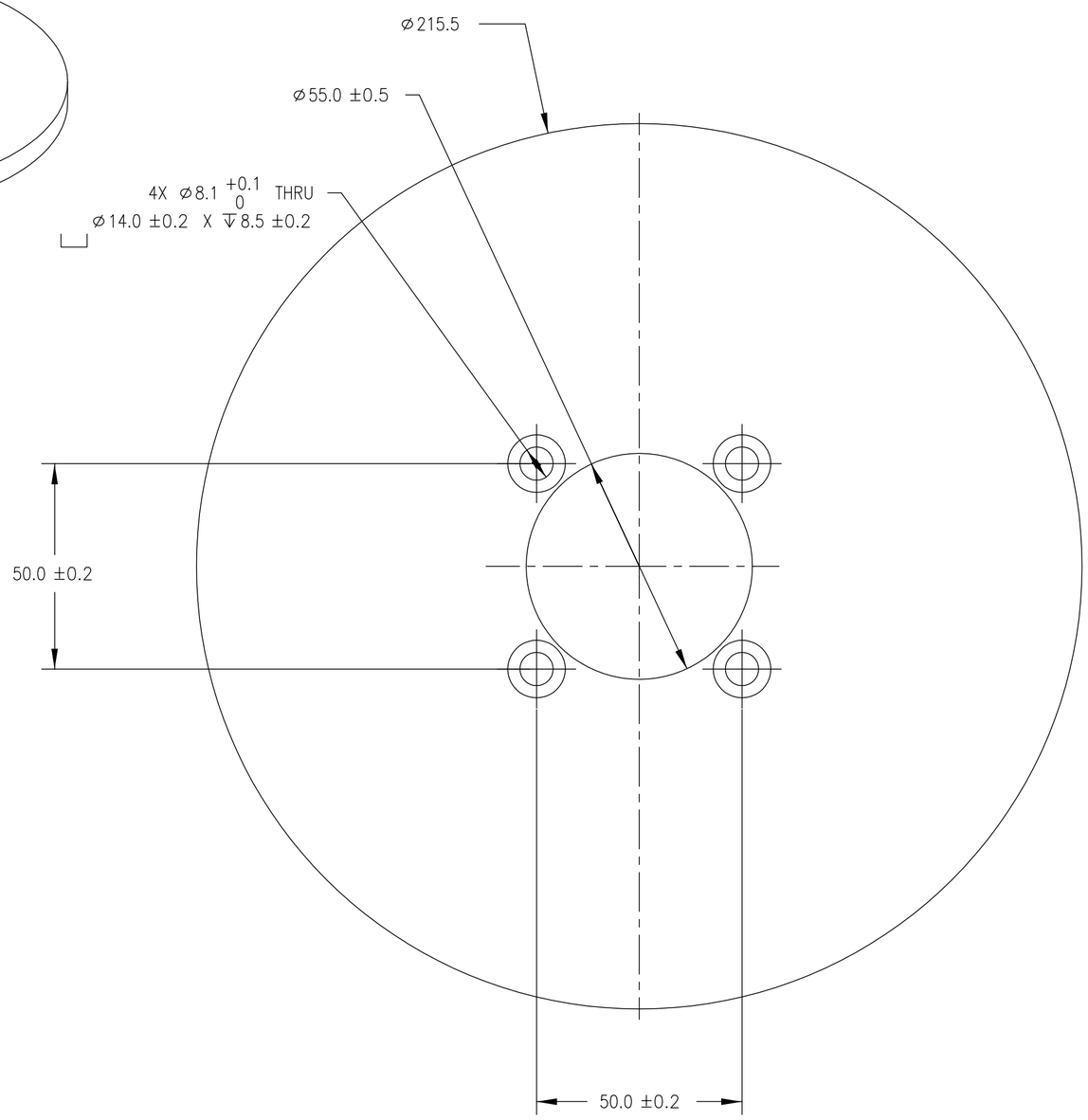

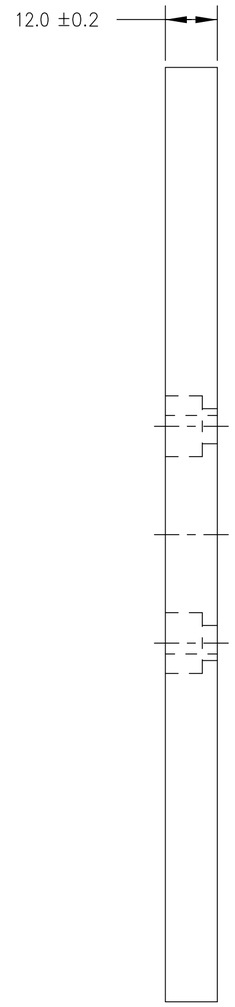

NOTES:

1. REMOVE ALL BURRS AND BREAK SHARP EDGES.
2. FINISH: SILVER ANODIZE

ITEM NO.	QTY	PART NO.	DESCRIPTION

PART LIST

UNITS ARE millimeters

TOLERANCES ARE: *

DECIMALS:
X ±0.5
.X ±0.1
.XX ±0.05

ANGLES: ±0.5°

MACHINED: 63

* unless otherwise noted

MATERIAL: ALUM. 6082

SCALE: 1.000

APPROVALS	DATE
DRAWN	
CHECKED	
ENGINEER	

NATIONAL HIGHWAY TRAFFIC SAFETY ADMINISTRATION

DISC

SIZE	SHEET	DRAWING NUMBER	REV.
A2	1 OF 1	175-9001	A

REVISION RECORD			
REV.	DESCRIPTION	DATE	BY
A	NHTSA PART 575 NPRM RELEASE	7/30/04	DW

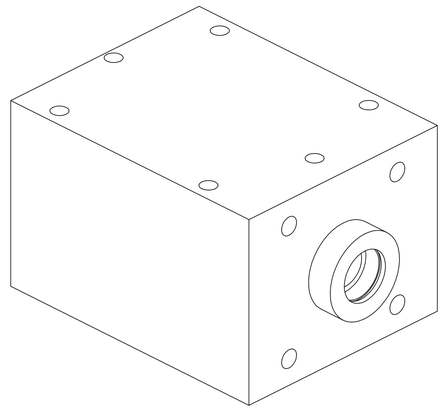

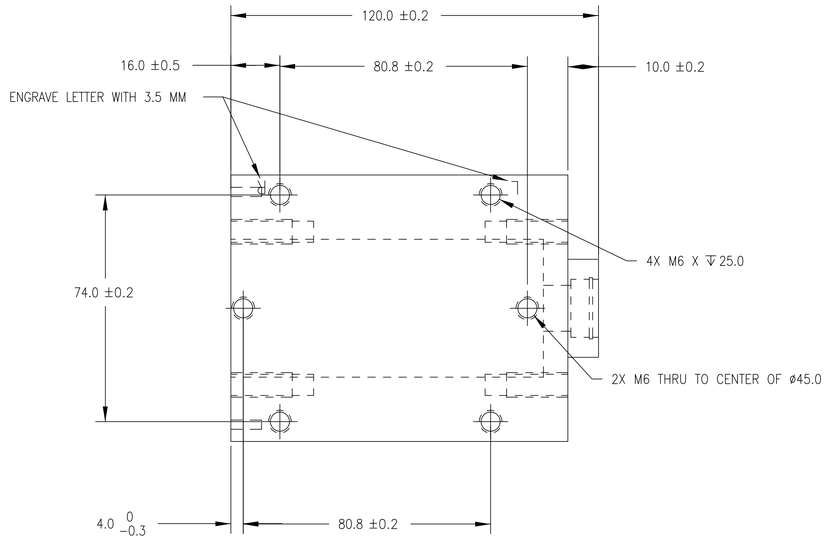

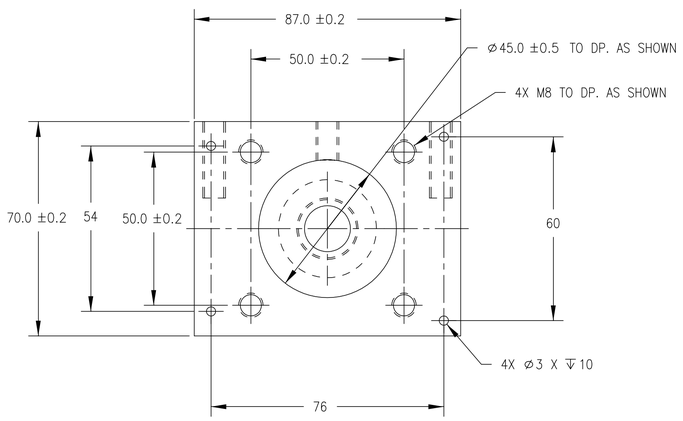

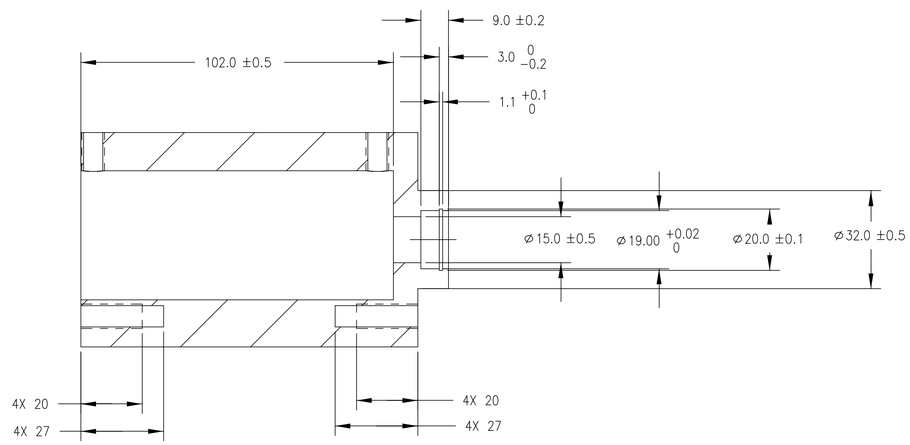

SECTION A-A

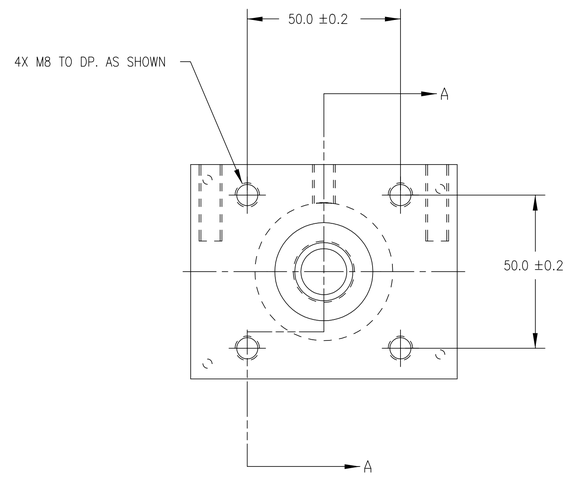

NOTES:

1. REMOVE ALL BURRS AND BREAK SHARP EDGES.
2. FINISH: SILVER ANODIZE

ITEM NO.	QTY	PART NO.	DESCRIPTION

PART LIST

UNITS ARE millimeters

TOLERANCES ARE: *

DECIMALS: .X ±0.5, .X ±0.1, .XX ±0.05

ANGLES: ±0.5°

MACHINED: 63

* unless otherwise noted

MATERIAL: ALUM. 6082

SCALE: 1.000

APPROVALS	DATE
DRAWN	
CHECKED	
ENGINEER	

NATIONAL HIGHWAY TRAFFIC SAFETY ADMINISTRATION

CENTRAL PART

SIZE	SHEET	DRAWING NUMBER	REV.
A1	1 OF 1	175-9002	A

REVISION RECORD			
REV.	DESCRIPTION	DATE	BY
A	NHTSA PART 575 NPRM RELEASE	7/30/04	DW

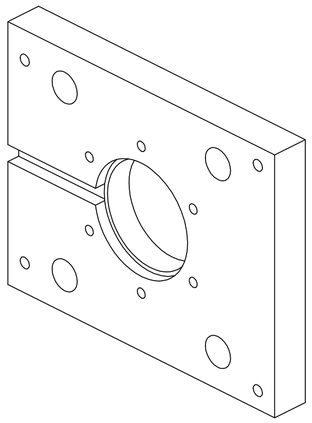

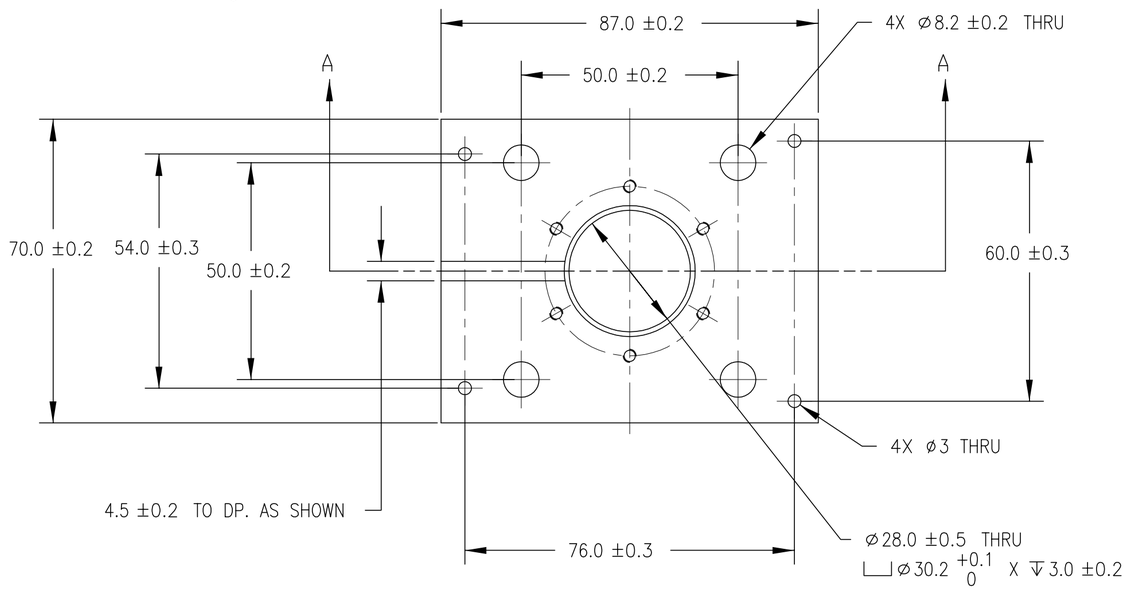

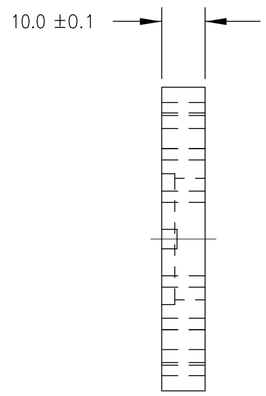

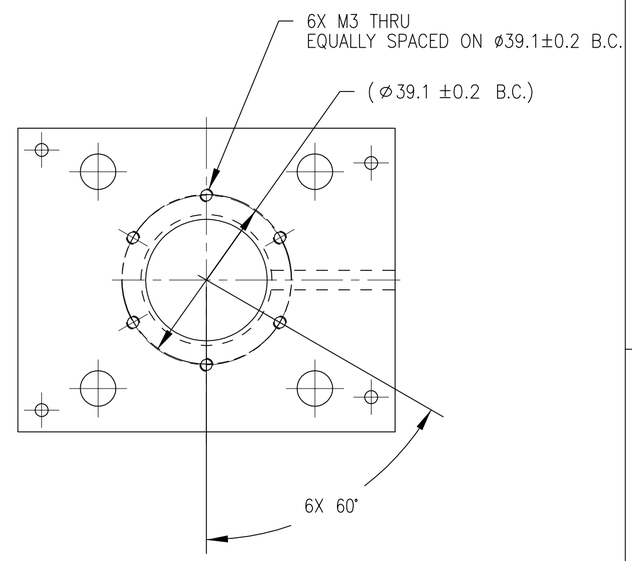

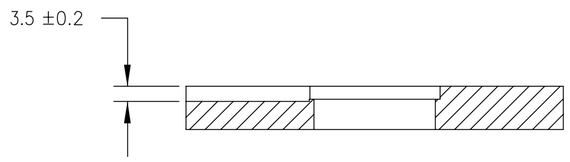

SECTION A-A

NOTES:

1. REMOVE ALL BURRS AND BREAK SHARP EDGES.
2. FINISH: SILVER ANODIZE

ITEM NO.	QTY	PART NO.	DESCRIPTION

PART LIST

UNITS ARE millimeters

TOLERANCES ARE: *

DECIMALS:
X ±0.5
.X ±0.1
.XX ±0.05

ANGLES: ±0.5°

MACHINED: 63

* unless otherwise noted

MATERIAL: ALUM. 6082

SCALE: 1.000

APPROVALS	DATE
DRAWN	
CHECKED	
ENGINEER	

NATIONAL HIGHWAY TRAFFIC SAFETY ADMINISTRATION

COVER

SIZE	SHEET	DRAWING NUMBER	REV.
A2	1 OF 1	175-9003	A

REVISION RECORD			
REV.	DESCRIPTION	DATE	BY
A	NHTSA PART 575 NPRM RELEASE	7/30/04	DW

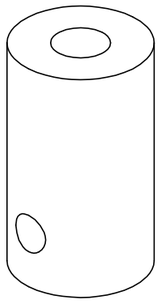

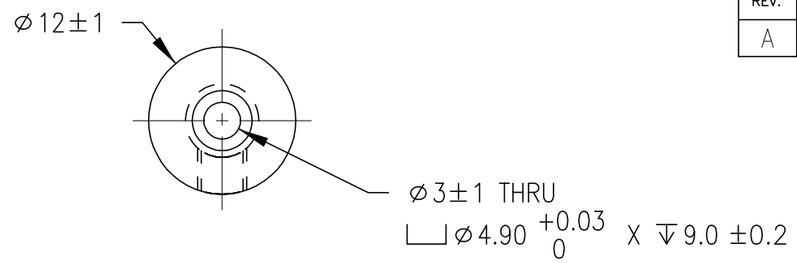

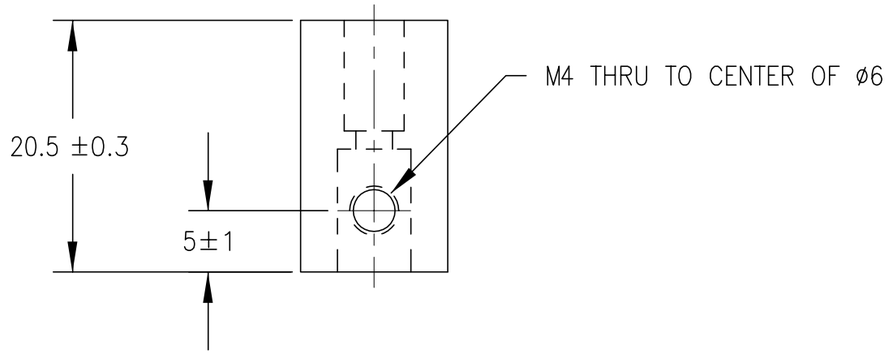

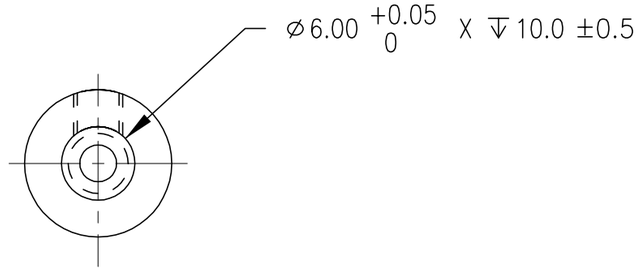

NOTES:

1. REMOVE ALL BURRS AND BREAK SHARP EDGES.
2. FINISH: SILVER ANODIZE

ITEM NO.	QTY	PART NO.	DESCRIPTION

PART LIST

UNITS ARE millimeters

TOLERANCES ARE: *

DECIMALS:
X ±0.5
.X ±0.1
.XX ±0.05

ANGLES: ±0.5°

MACHINED: 63

* unless otherwise noted

MATERIAL	ALUM. 6082	
SCALE	2.000	
APPROVALS		DATE
DRAWN		
CHECKED		
ENGINEER		

NATIONAL HIGHWAY TRAFFIC SAFETY ADMINISTRATION

COUPLING

SIZE	SHEET	DRAWING NUMBER	REV.
A3	1 OF 1	175-9004	A

REVISION RECORD			
REV.	DESCRIPTION	DATE	BY
A	NHTSA PART 575 NPRM RELEASE	7/30/04	DW

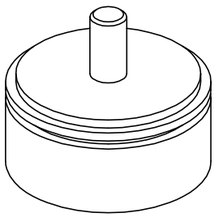

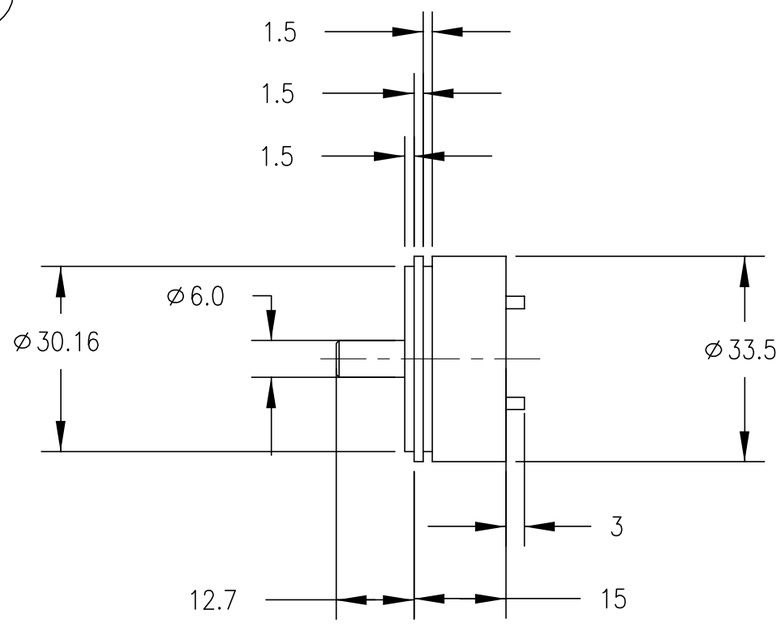

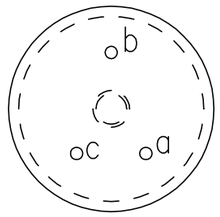

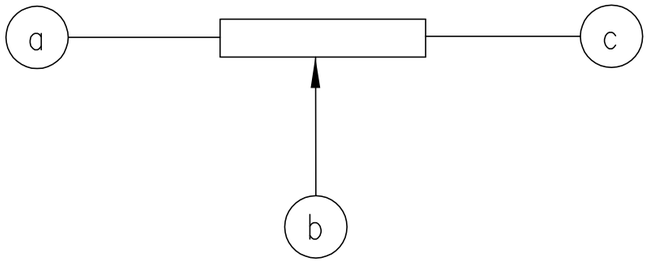

NOTES:

1. WORKING ELECTRICAL TRAVEL 350°±3°
2. RESISTANCE RANGE 1 TO 220 K Ω
3. INDEPENDENT LINEARITY ±.25%
4. WIPER CURRENT LESS THAN 1 mA
5. STARTING AND RUNNING TORQUE LESS THAN 30 cN.cm

ITEM NO.	QTY	PART NO.	DESCRIPTION

PART LIST

UNITS ARE millimeters

TOLERANCES ARE: *

DECIMALS:
X ±0.5
.X ±0.1
.XX ±0.05

ANGLES: ±0.5°

MACHINED: 63

* unless otherwise noted

MATERIAL

SCALE 1.000

APPROVALS	DATE
DRAWN	
CHECKED	
ENGINEER	

NATIONAL HIGHWAY TRAFFIC SAFETY ADMINISTRATION

ROTARY POTENTIOMETER

SIZE	SHEET	DRAWING NUMBER	REV.
A3	1 OF 1	SA572-S53	A

REVISION RECORD			
REV.	DESCRIPTION	DATE	BY
A	NHTSA PART 575 NPRM RELEASE	7/30/04	DW

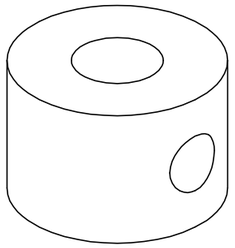

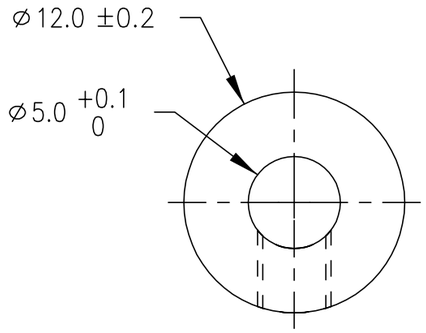

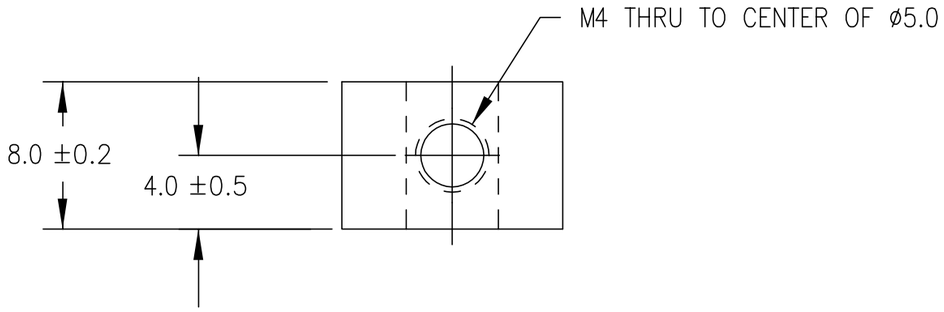

NOTES:

1. REMOVE ALL BURRS AND BREAK SHARP EDGES.
2. FINISH: SILVER ANODIZE

ITEM NO.	QTY	PART NO.	DESCRIPTION

PART LIST

UNITS ARE millimeters

TOLERANCES ARE: *

DECIMALS:
X ±0.5
.X ±0.1
.XX ±0.05

ANGLES: ±0.5°

MACHINED: 63

* unless otherwise noted

MATERIAL	ALUM. 6082		
SCALE	3.000		
APPROVALS		DATE	
DRAWN			
CHECKED			
ENGINEER			

NATIONAL HIGHWAY TRAFFIC SAFETY ADMINISTRATION

LOCK SPACER

SIZE	SHEET	DRAWING NUMBER	REV.
A3	1 OF 1	175-9006	A

REVISION RECORD			
REV.	DESCRIPTION	DATE	BY
A	NHTSA PART 575 NPRM RELEASE	7/30/04	DW

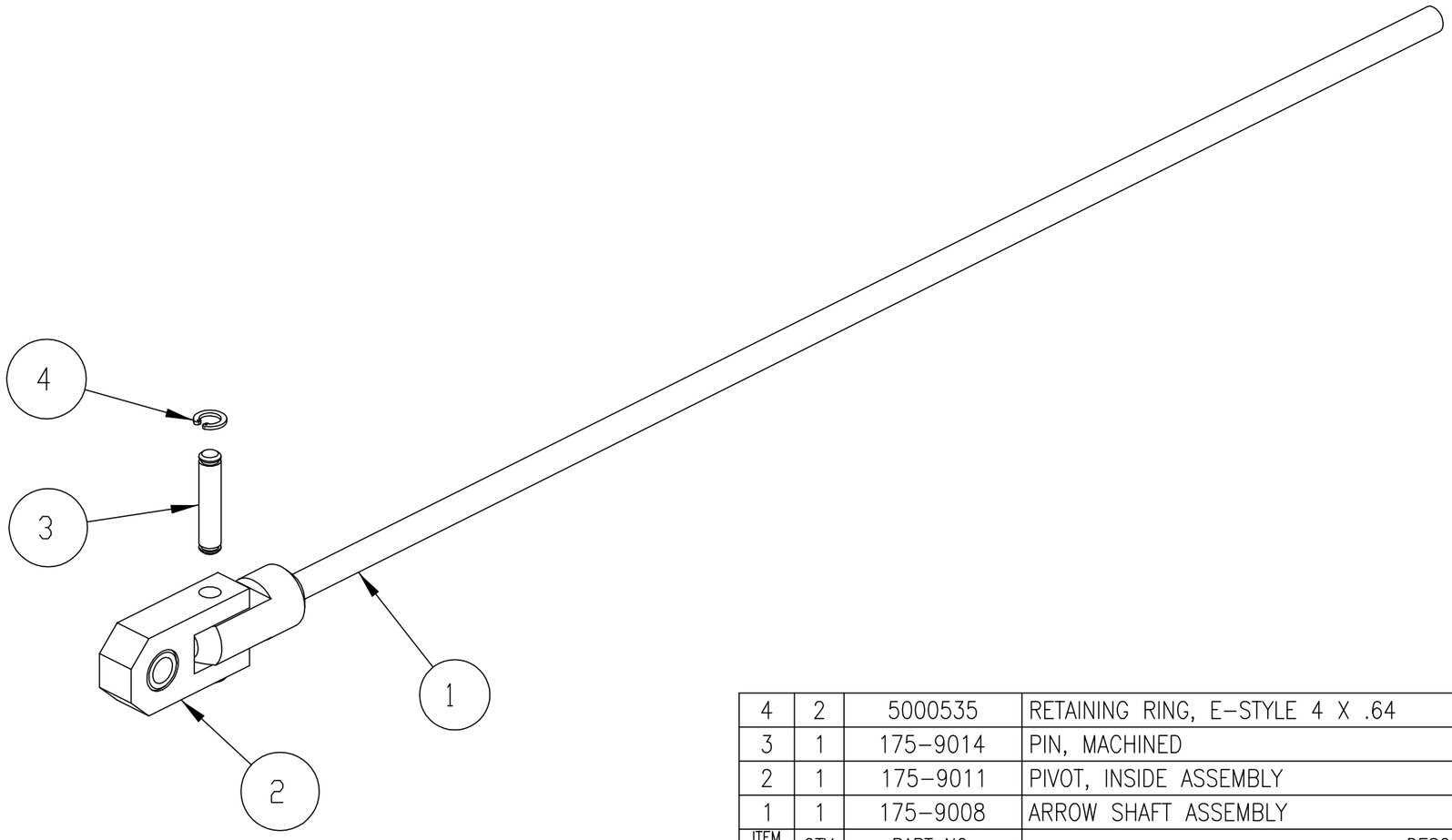

ITEM NO.	QTY	PART NO.	DESCRIPTION
4	2	5000535	RETAINING RING, E-STYLE 4 X .64
3	1	175-9014	PIN, MACHINED
2	1	175-9011	PIVOT, INSIDE ASSEMBLY
1	1	175-9008	ARROW SHAFT ASSEMBLY

PART LIST

UNITS ARE millimeters

TOLERANCES ARE: *

DECIMALS:
X ±0.5
.X ±0.1
.XX ±0.05

ANGLES: ±0.5°

MACHINED: 63

* unless otherwise noted

MATERIAL		
SCALE	1.000	
APPROVALS		DATE
DRAWN		
CHECKED		
ENGINEER		

NATIONAL HIGHWAY TRAFFIC SAFETY ADMINISTRATION

ARROW SHAFT-PIVOT ASSEMBLY B

SIZE	SHEET	DRAWING NUMBER	REV.
A3	1 OF 1	175-9007	A

REVISION RECORD			
REV.	DESCRIPTION	DATE	BY
A	NHTSA PART 575 NPRM RELEASE	7/30/04	DW

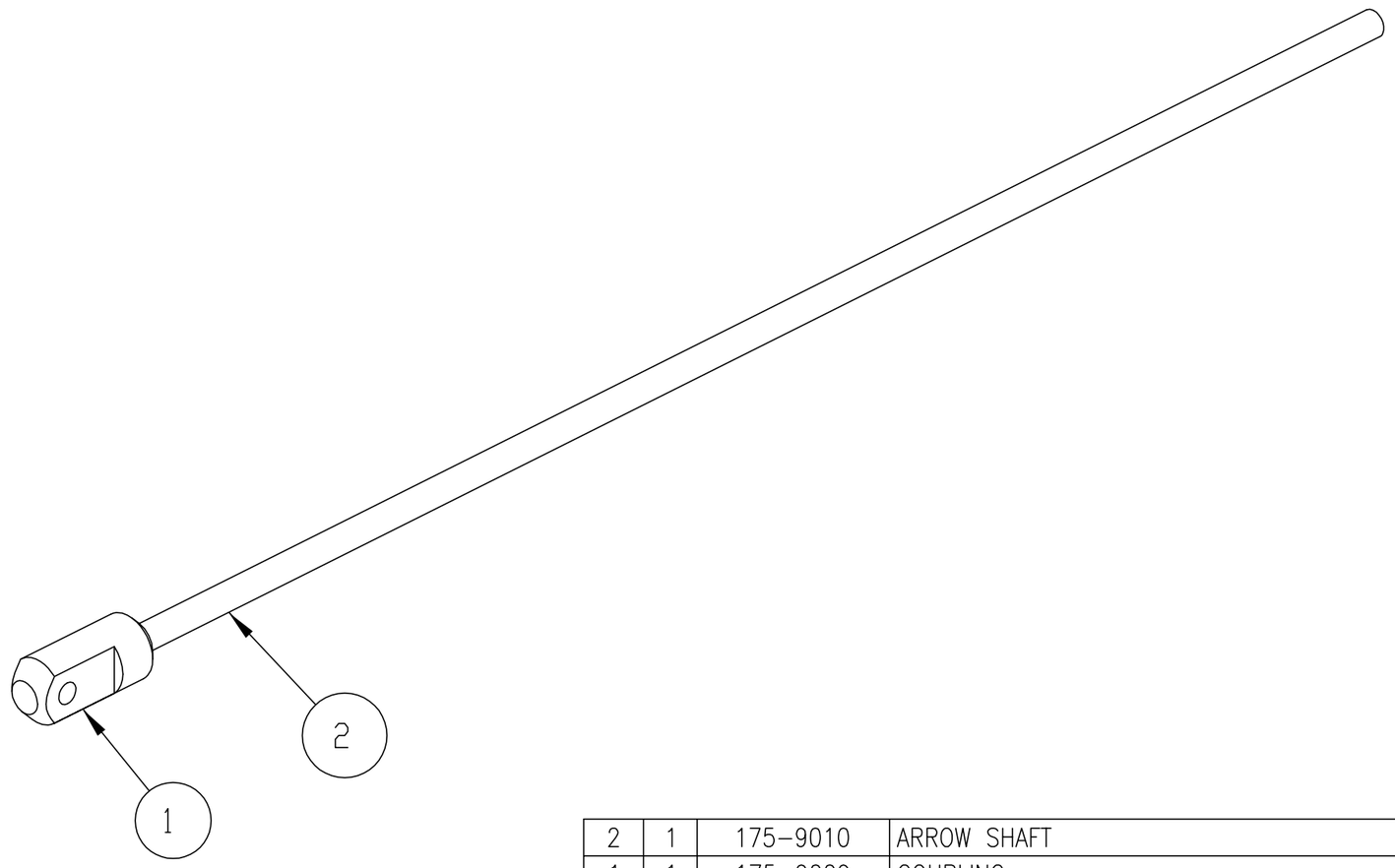

ITEM NO.	QTY	PART NO.	DESCRIPTION
2	1	175-9010	ARROW SHAFT
1	1	175-9009	COUPLING

PART LIST

UNITS ARE millimeters

TOLERANCES ARE: *

DECIMALS:
X ±0.5
.X ±0.1
.XX ±0.05

ANGLES: ±0.5°

MACHINED: 63

* unless otherwise noted

MATERIAL

SCALE 1.000

APPROVALS	DATE
DRAWN	
CHECKED	
ENGINEER	

NATIONAL HIGHWAY TRAFFIC SAFETY ADMINISTRATION

ARROW SHAFT ASSEMBLY

SIZE	SHEET	DRAWING NUMBER	REV.
A3	1 OF 1	175-9008	A

REVISION RECORD			
REV.	DESCRIPTION	DATE	BY
A	NHTSA PART 575 NPRM RELEASE	7/30/04	DW

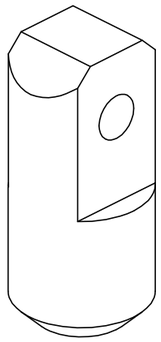

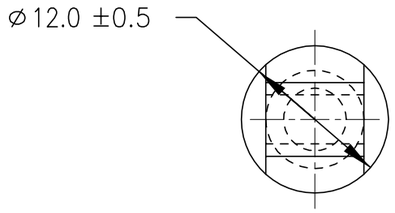

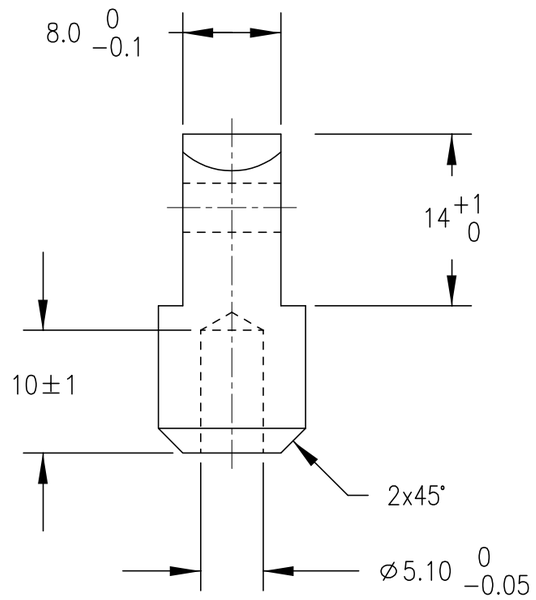

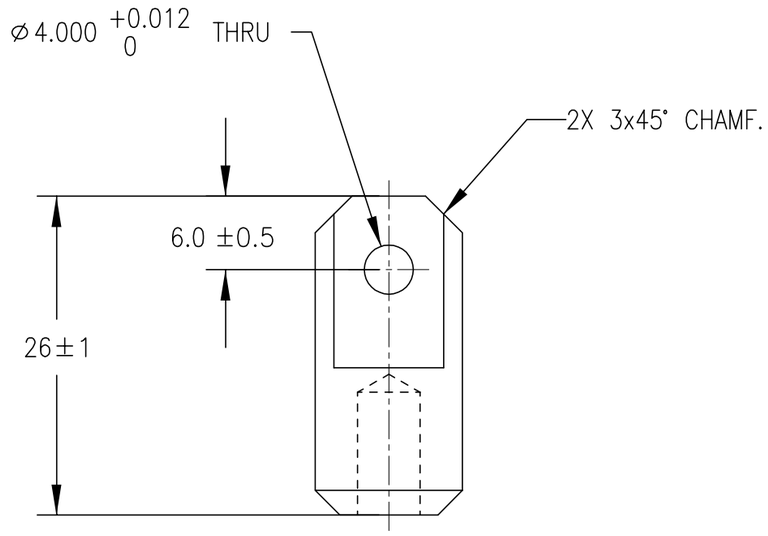

NOTES:

1. REMOVE ALL BURRS AND BREAK ALL SHARP EDGES.
2. FINISH: SILVER ANODIZE

ITEM NO.	QTY	PART NO.	DESCRIPTION

PART LIST

UNITS ARE millimeters

TOLERANCES ARE: *

DECIMALS:
X ±0.5
.X ±0.1
.XX ±0.05

ANGLES: ±0.5°

MACHINED: 63

* unless otherwise noted

MATERIAL	ALUM. 6082
SCALE	2.000
APPROVALS	DATE
DRAWN	
CHECKED	
ENGINEER	

NATIONAL HIGHWAY TRAFFIC SAFETY ADMINISTRATION

COUPLING

SIZE	SHEET	DRAWING NUMBER	REV.
A3	1 OF 1	175-9009	A

REVISION RECORD			
REV.	DESCRIPTION	DATE	BY
A	NHTSA PART 575 NPRM RELEASE	7/30/04	DW

SCALE 0.500

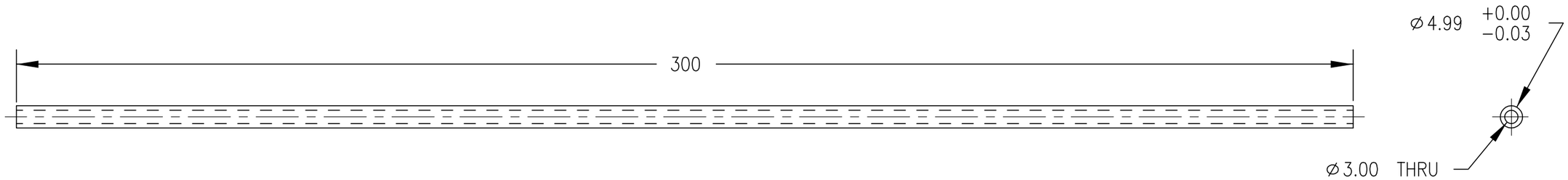

NOTES:

1. REMOVE BURRS AND BREAK SHARP EDGES.

ITEM NO.	QTY	PART NO.	DESCRIPTION

PART LIST

UNITS ARE millimeters

TOLERANCES ARE: *

DECIMALS:
X ±0.5
.X ±0.1
.XX ±0.05

ANGLES: ±0.5°

MACHINED: 63

* unless otherwise noted

MATERIAL: CARBON FIBER/ARROW SHAFT

SCALE: 1.000

APPROVALS	DATE
DRAWN	
CHECKED	
ENGINEER	

NATIONAL HIGHWAY TRAFFIC SAFETY ADMINISTRATION

ARROW SHAFT

SIZE	SHEET	DRAWING NUMBER	REV.
A3	1 OF 1	175-9010	A

REVISION RECORD			
REV.	DESCRIPTION	DATE	BY
A	NHTSA PART 575 NPRM RELEASE	7/30/04	DW

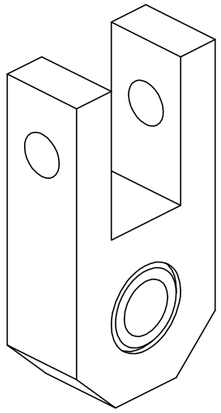

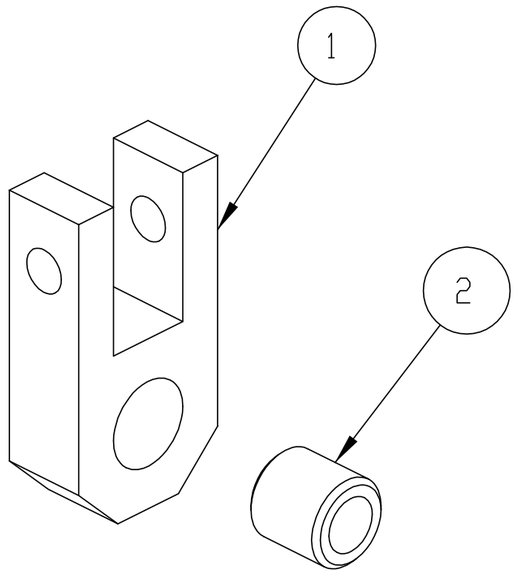

ITEM NO.	QTY	PART NO.	DESCRIPTION
2	1	175–9013	BEARING
1	1	175–9012	PIVOT, INSIDE

PART LIST

UNITS ARE millimeters

TOLERANCES ARE: *

DECIMALS:
X ±0.5
.X ±0.1
.XX ±0.05

ANGLES: ±0.5°

MACHINED: 63

* unless otherwise noted

MATERIAL		
SCALE 2.000		
APPROVALS	DATE	
DRAWN		
CHECKED		
ENGINEER		

NATIONAL HIGHWAY TRAFFIC SAFETY ADMINISTRATION

PIVOT, INSIDE ASSEMBLY

SIZE	SHEET	DRAWING NUMBER	REV.
A3	1 OF 1	175–9011	A

REVISION RECORD			
REV.	DESCRIPTION	DATE	BY
A	NHTSA PART 575 NPRM RELEASE	7/30/04	DW

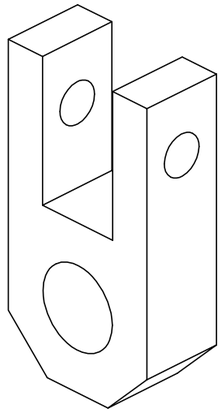

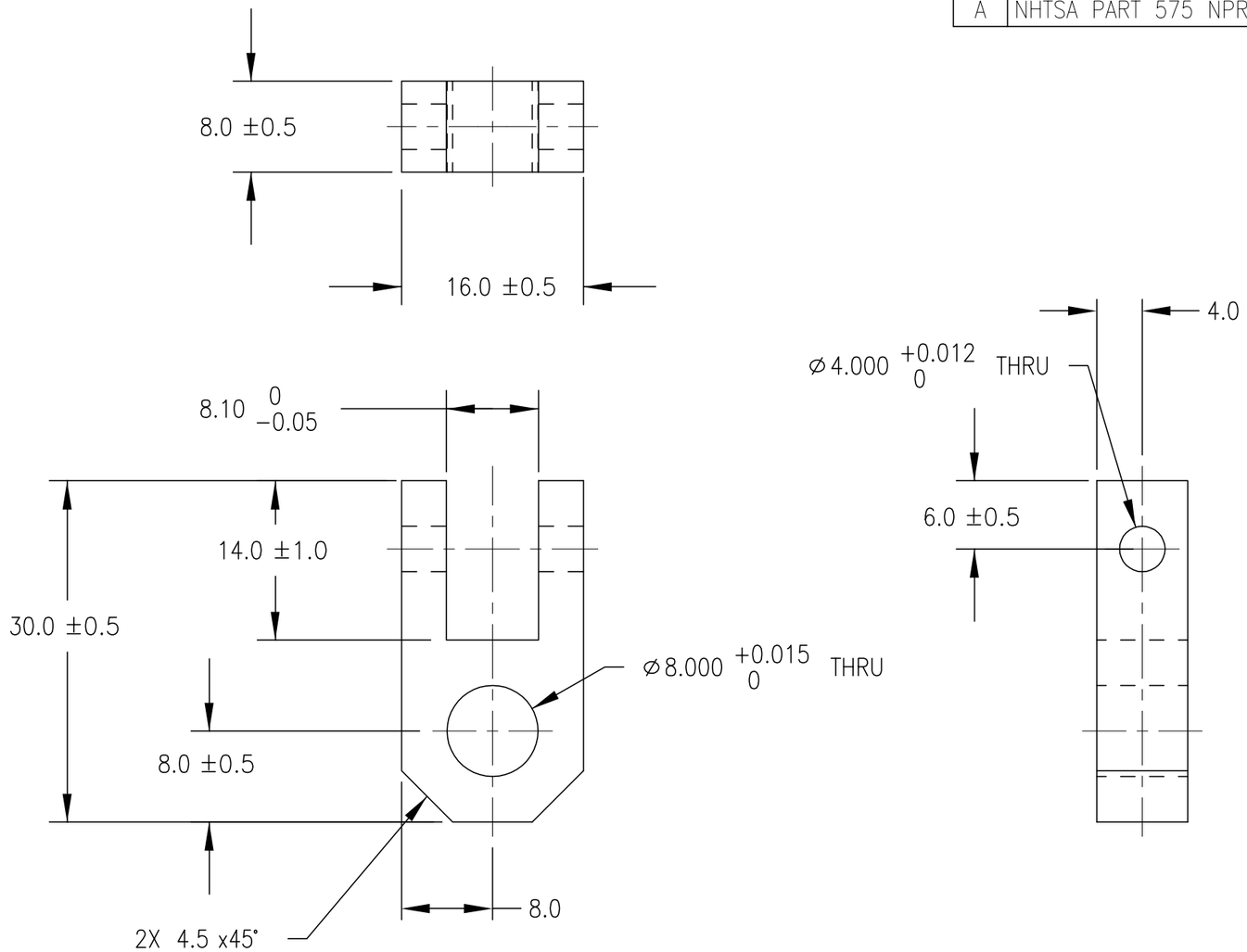

NOTES:
1. REMOVE ALL BURRS AND BREAK ALL SHARP EDGES.
2. FINISH: SILVER ANODIZE

ITEM NO.	QTY	PART NO.	DESCRIPTION

PART LIST

UNITS ARE millimeters

TOLERANCES ARE: *

DECIMALS:
X ±0.5
.X ±0.1
.XX ±0.05

ANGLES: ±0.5°

MACHINED: 63

* unless otherwise noted

MATERIAL: ALUM. 6082

SCALE: 2.000

APPROVALS	DATE
DRAWN	
CHECKED	
ENGINEER	

NATIONAL HIGHWAY TRAFFIC SAFETY ADMINISTRATION

PIVOT, INSIDE

SIZE	SHEET	DRAWING NUMBER	REV.
A3	1 OF 1	175-9012	A

REVISION RECORD			
REV.	DESCRIPTION	DATE	BY
A	NHTSA PART 575 NPRM RELEASE	7/30/04	DW

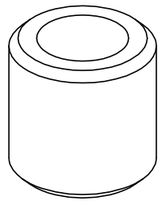

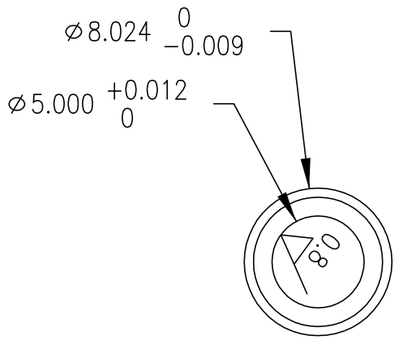

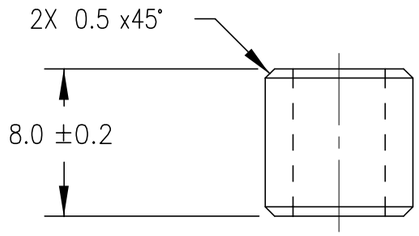

NOTES:

1. REMOVE ALL BURRS AND BREAK ALL SHARP EDGES.

ITEM NO.	QTY	PART NO.	DESCRIPTION

PART LIST

UNITS ARE millimeters

TOLERANCES ARE: *

DECIMALS:
X ±0.5
.X ±0.1
.XX ±0.05

ANGLES: ±0.5°

MACHINED: 63

* unless otherwise noted

MATERIAL: BRONZE

SCALE: 3.000

APPROVALS	DATE
DRAWN	
CHECKED	
ENGINEER	

NATIONAL HIGHWAY TRAFFIC SAFETY ADMINISTRATION

BEARING

SIZE	SHEET	DRAWING NUMBER	REV.
A3	1 OF 1	175-9013	A

REVISION RECORD			
REV.	DESCRIPTION	DATE	BY
A	NHTSA PART 575 NPRM RELEASE	7/30/04	DW

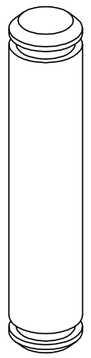

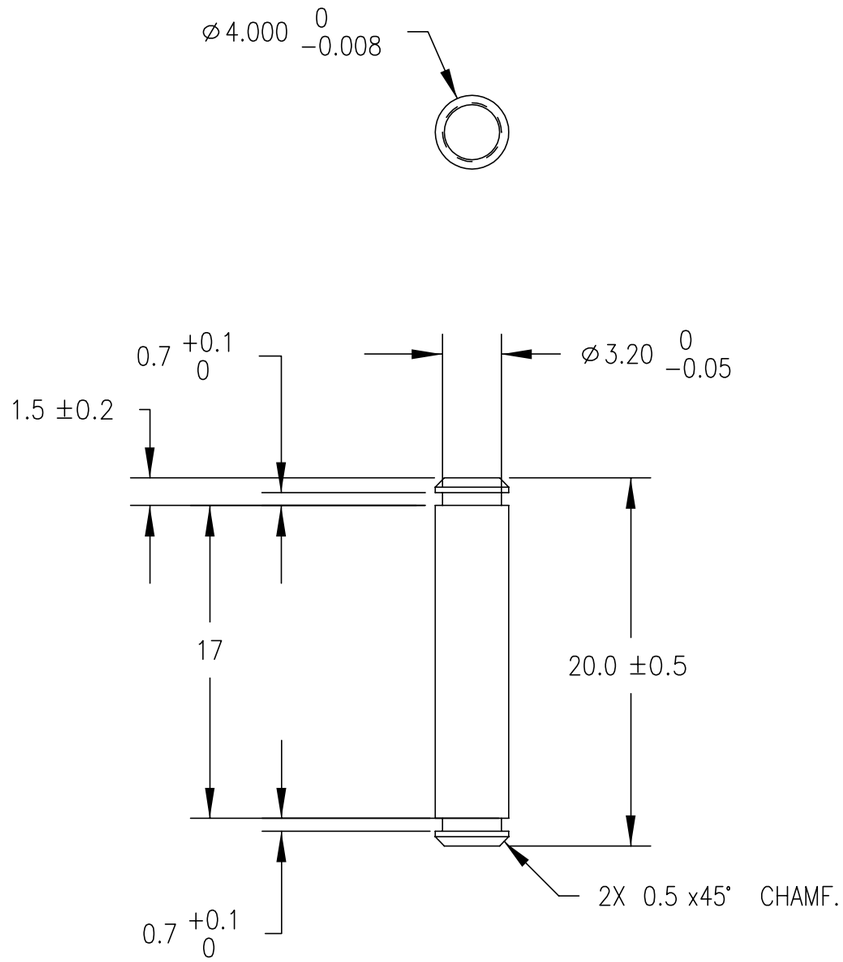

NOTES:

1. REMOVE ALL BURRS AND BREAK ALL SHARP EDGES.

ITEM NO.	QTY	PART NO.	DESCRIPTION

PART LIST

UNITS ARE millimeters

TOLERANCES ARE: *

DECIMALS:
X ±0.5
.X ±0.1
.XX ±0.05

ANGLES: ±0.5°

MACHINED: 63

* unless otherwise noted

MATERIAL	SS 304	
SCALE	3.000	
APPROVALS		DATE
DRAWN		
CHECKED		
ENGINEER		

NATIONAL HIGHWAY TRAFFIC SAFETY ADMINISTRATION

PIN, MACHINED

SIZE	SHEET	DRAWING NUMBER	REV.
A3	1 OF 1	175-9014	A

REVISION RECORD			
REV.	DESCRIPTION	DATE	BY
A	NHTSA PART 575 NPRM RELEASE	7/30/04	DW

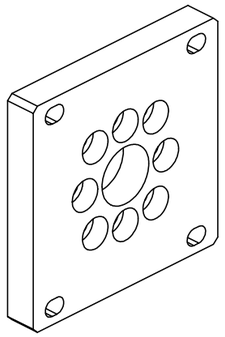

SCALE 0.500

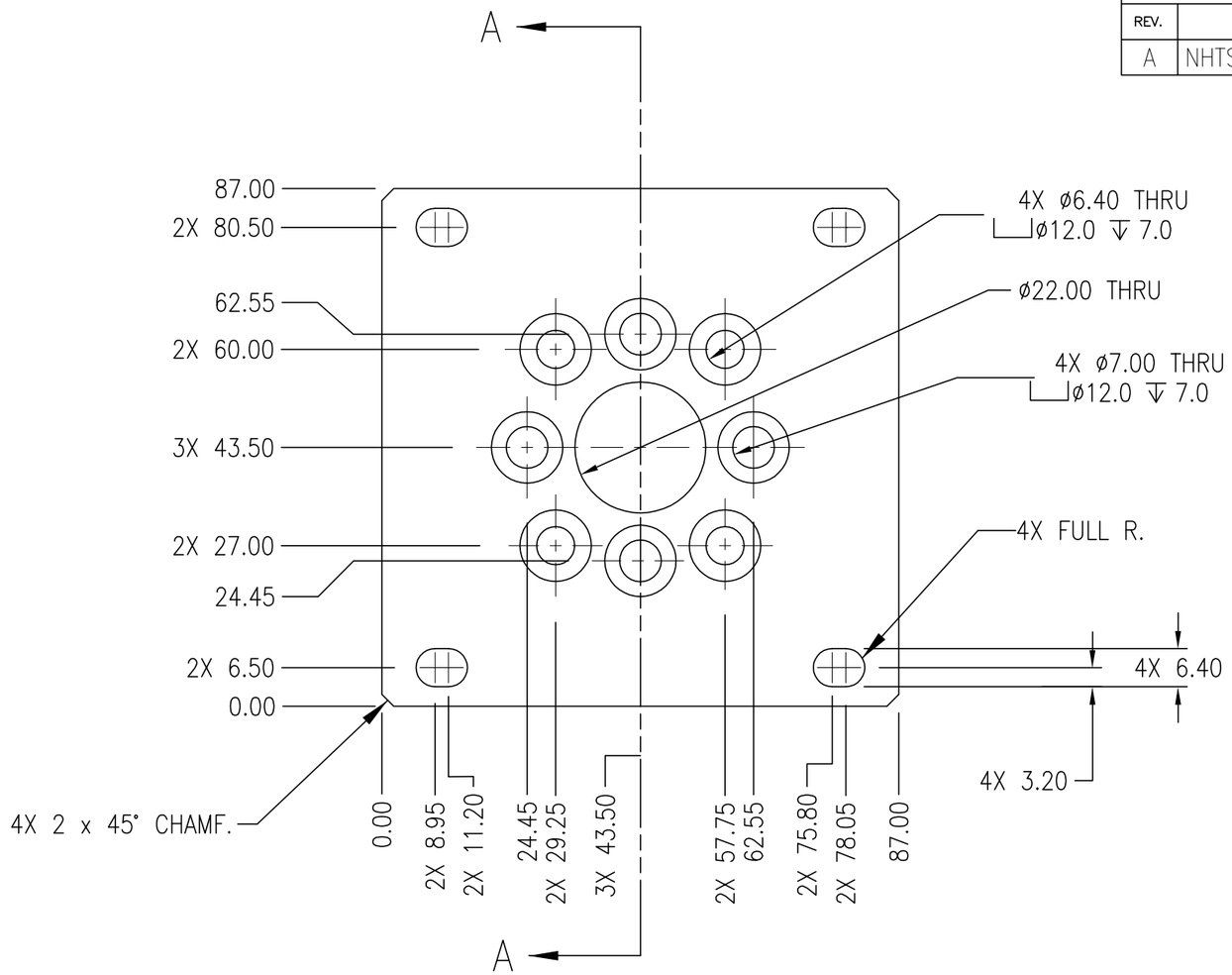

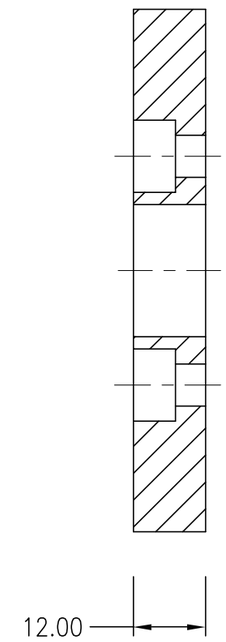

SECTION A–A

NOTES:

1. REMOVE ALL BURRS AND BREAK SHARP EDGES.
2. FINISH: CLEAR ANODIZE

ITEM NO.	QTY	PART NO.	DESCRIPTION

PART LIST

UNITS ARE millimeters

TOLERANCES ARE: *

DECIMALS:
X ±0.5
.X ±0.1
.XX ±0.05

ANGLES: ±0.5°

MACHINED: 63

* unless otherwise noted

MATERIAL: ALUMINUM 6082

SCALE: 1.000

APPROVALS	DATE
DRAWN	
CHECKED	
ENGINEER	

NATIONAL HIGHWAY TRAFFIC SAFETY ADMINISTRATION

NECK & LUMBAR SPINE MOUNTING BASE

SIZE	SHEET	DRAWING NUMBER	REV.
A3	1 OF 1	175–9029	A

REVISION RECORD			
REV.	DESCRIPTION	DATE	BY
A	NHTSA PART 575 NPRM RELEASE	7/30/04	DW

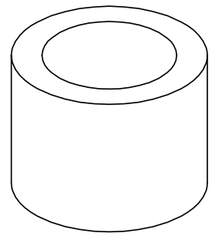

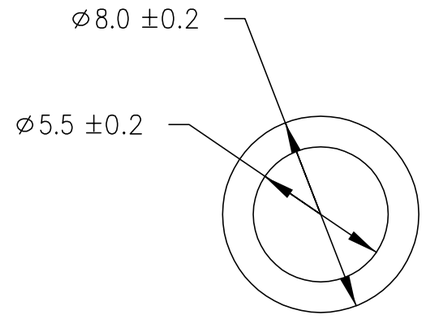

NOTES:

1. REMOVE ALL BURRS AND BREAK ALL SHARP EDGES.

ITEM NO.	QTY	PART NO.	DESCRIPTION

PART LIST

UNITS ARE millimeters

TOLERANCES ARE: *

DECIMALS:
X ±0.5
.X ±0.1
.XX ±0.05

ANGLES: ±0.5°

MACHINED: 63

* unless otherwise noted

MATERIAL: ALUM. 6082

SCALE: 4.000

APPROVALS	DATE
DRAWN	
CHECKED	
ENGINEER	

NATIONAL HIGHWAY TRAFFIC SAFETY ADMINISTRATION

SPACER

SIZE	SHEET	DRAWING NUMBER	REV.
A3	1 OF 1	175-9016	A

REVISION RECORD			
REV.	DESCRIPTION	DATE	BY
A	NHTSA PART 575 NPRM RELEASE	7/30/04	DW

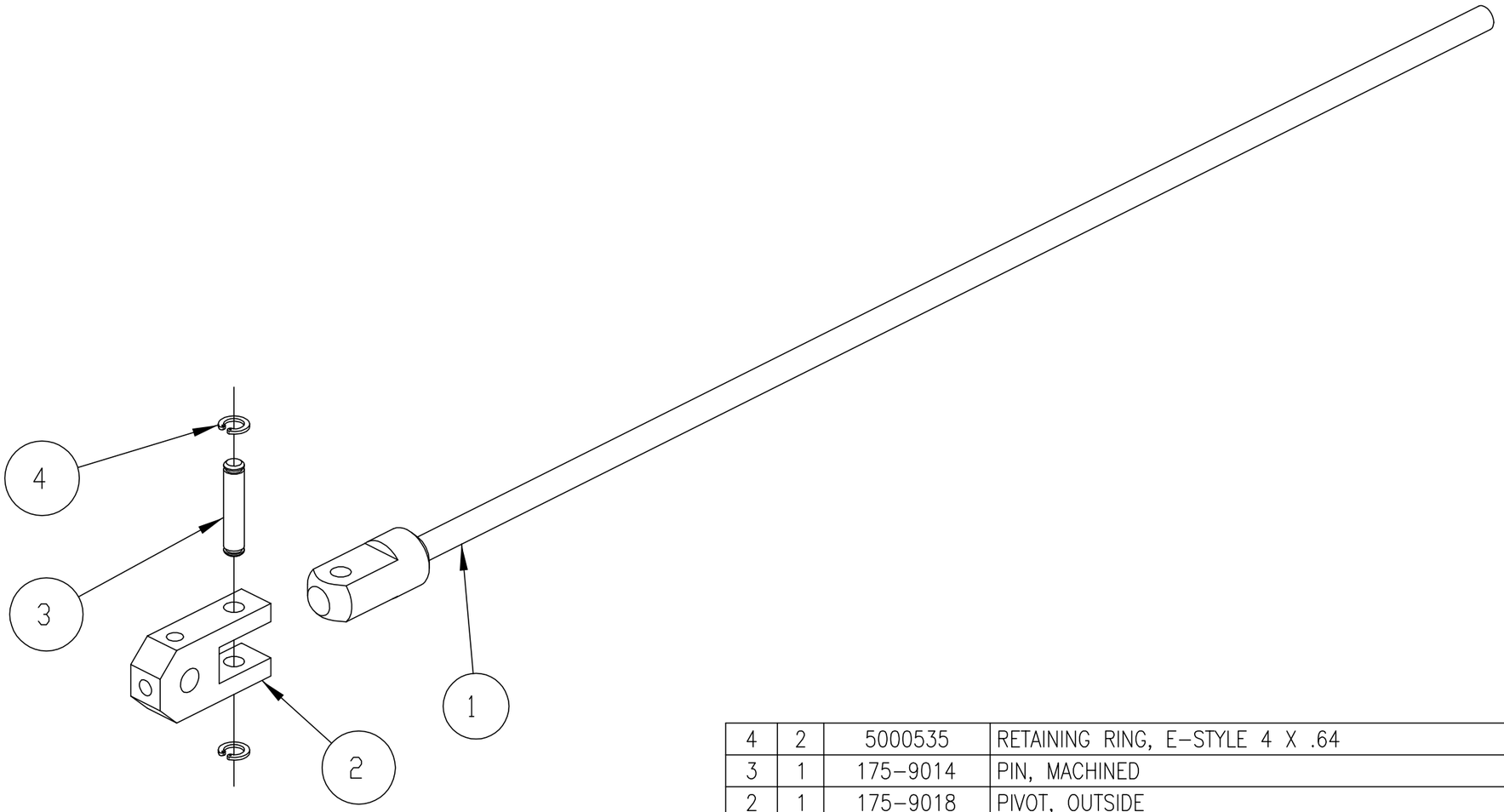

ITEM NO.	QTY	PART NO.	DESCRIPTION
4	2	5000535	RETAINING RING, E-STYLE 4 X .64
3	1	175-9014	PIN, MACHINED
2	1	175-9018	PIVOT, OUTSIDE
1	1	175-9008	ARROW SHAFT ASSEMBLY

PART LIST

UNITS ARE millimeters

TOLERANCES ARE: *

DECIMALS:
X ±0.5
.X ±0.1
.XX ±0.05

ANGLES: ±0.5°

MACHINED: 63

* unless otherwise noted

MATERIAL

SCALE 1.000

APPROVALS	DATE
DRAWN	
CHECKED	
ENGINEER	

NATIONAL HIGHWAY TRAFFIC SAFETY ADMINISTRATION

ARROW SHAFT-PIVOT ASSEMBLY, A

SIZE	SHEET	DRAWING NUMBER	REV.
A3	1 OF 1	175-9017	A

REVISION RECORD			
REV.	DESCRIPTION	DATE	BY
A	NHTSA PART 575 NPRM RELEASE	7/30/04	DW

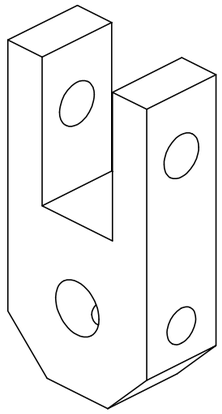

SCALE 2.000

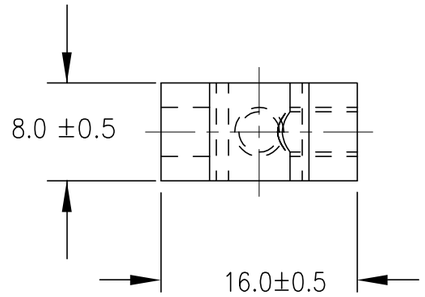

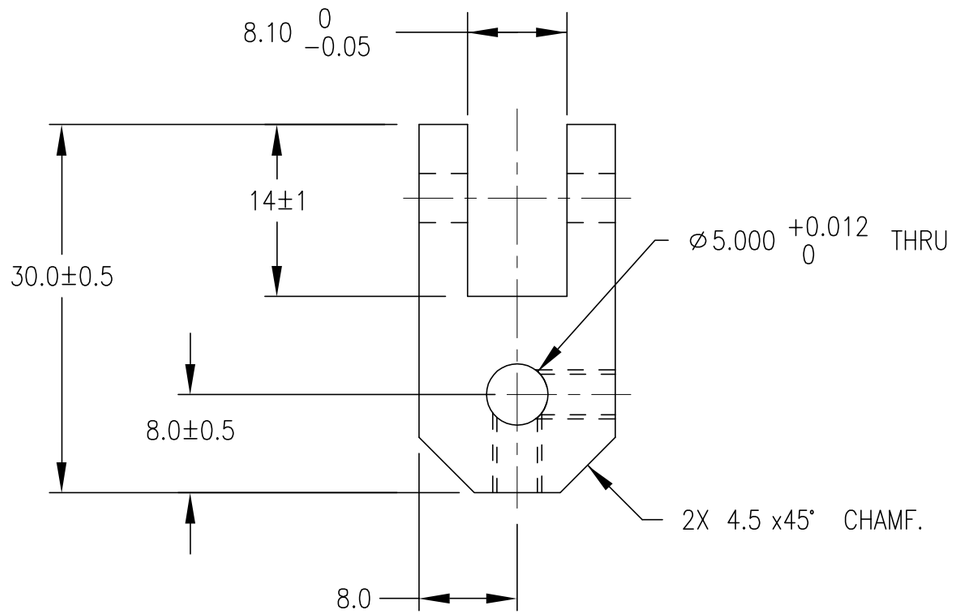

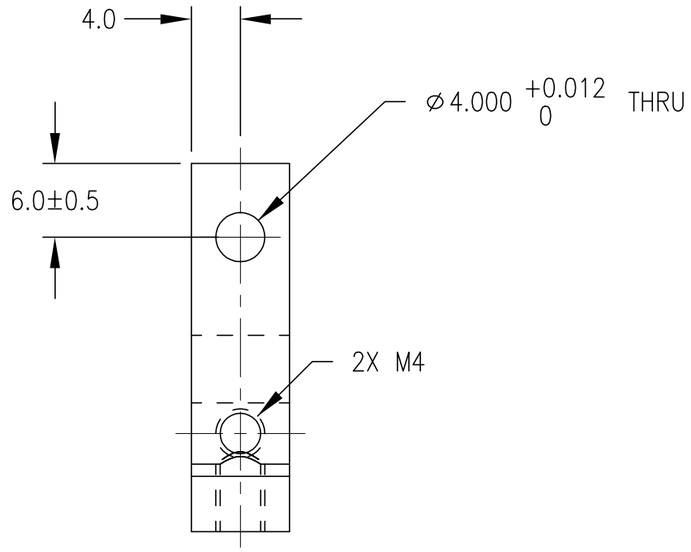

NOTES:

1. REMOVE ALL BURRS AND BREAK ALL SHARP EDGES.
2. FINISH: SILVER ANODIZE

ITEM NO.	QTY	PART NO.	DESCRIPTION

PART LIST

UNITS ARE millimeters

TOLERANCES ARE: *

DECIMALS:
X ±0.5
.X ±0.1
.XX ±0.05

ANGLES: ±0.5°

MACHINED: 63

* unless otherwise noted

MATERIAL	ALUM. 6082	
SCALE	2.000	
APPROVALS		DATE
DRAWN		
CHECKED		
ENGINEER		

NATIONAL HIGHWAY TRAFFIC SAFETY ADMINISTRATION

PIVOT, OUTSIDE

SIZE	SHEET	DRAWING NUMBER	REV.
A3	1 OF 1	175-9018	A

REVISION RECORD			
REV.	DESCRIPTION	DATE	BY
A	NHTSA PART 575 NPRM RELEASE	7/30/04	DW

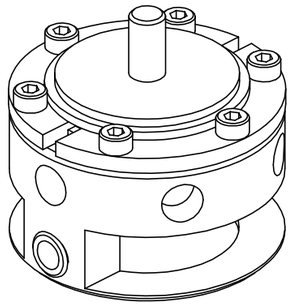

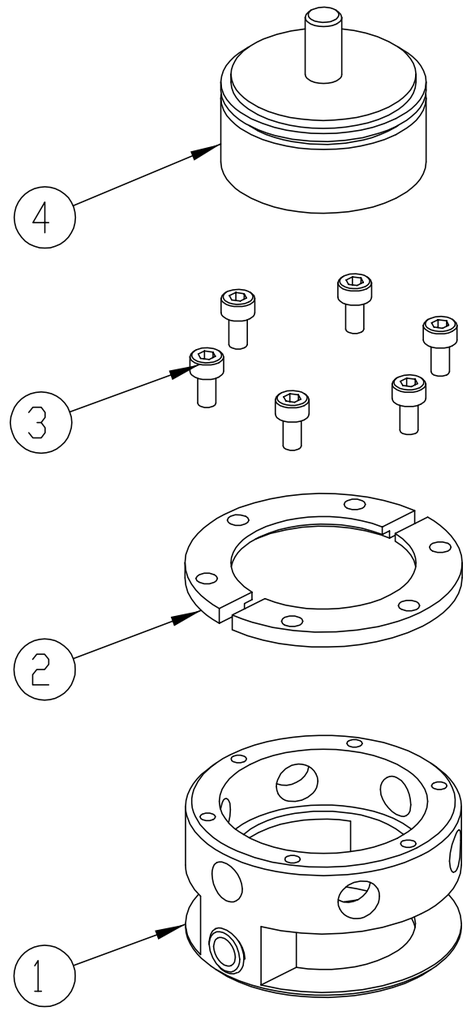

ITEM NO.	QTY	PART NO.	DESCRIPTION
4	1	SA572–S53	ROTARY POTENTIOMETER, MCB H33A
3	6	5000393	SCREW, SHCS M3 X .5 X 6
2	1	175–9022	POTENTIOMETER CLAMP
1	1	175–9020	POT HOUSING ASSEMBLY

PART LIST

UNITS ARE millimeters

TOLERANCES ARE: *

DECIMALS:
X ±0.5
.X ±0.1
.XX ±0.05

ANGLES: ±0.5°

MACHINED: 63

* unless otherwise noted

MATERIAL		
SCALE 1.000		
APPROVALS	DATE	
DRAWN		
CHECKED		
ENGINEER		

NATIONAL HIGHWAY TRAFFIC SAFETY ADMINISTRATION

POT ASSEMBLY

SIZE	SHEET	DRAWING NUMBER	REV.
A3	1 OF 1	175–9019	A

REVISION RECORD			
REV.	DESCRIPTION	DATE	BY
A	NHTSA PART 575 NPRM RELEASE	7/30/04	DW

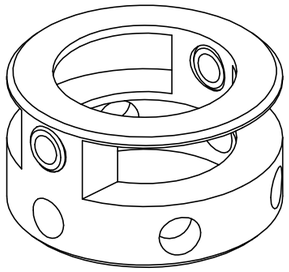

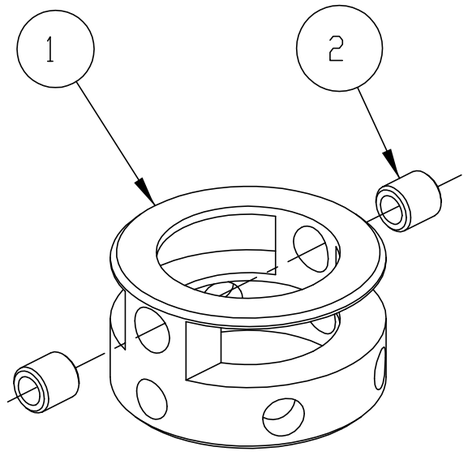

ITEM NO.	QTY	PART NO.	DESCRIPTION
2	2	175-9013	BEARING
1	1	175-9021	POTENTIOMETER HOUSING

PART LIST

UNITS ARE millimeters

TOLERANCES ARE: *

DECIMALS:
X ±0.5
.X ±0.1
.XX ±0.05

ANGLES: ±0.5°

MACHINED: 63

* unless otherwise noted

MATERIAL		
SCALE 1.000		
APPROVALS	DATE	
DRAWN		
CHECKED		
ENGINEER		

NATIONAL HIGHWAY TRAFFIC SAFETY ADMINISTRATION

POT HOUSING ASSEMBLY

SIZE	SHEET	DRAWING NUMBER	REV.
A3	1 OF 1	175-9020	A

REVISION RECORD			
REV.	DESCRIPTION	DATE	BY
A	NHTSA PART 575 NPRM RELEASE	7/30/04	DW

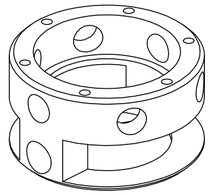

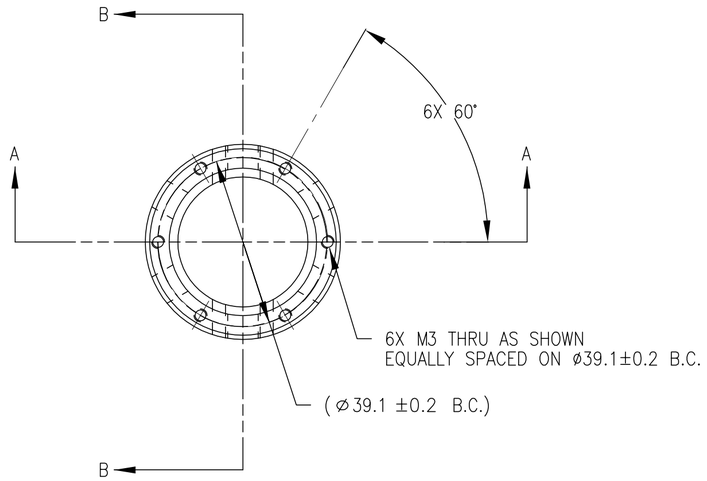

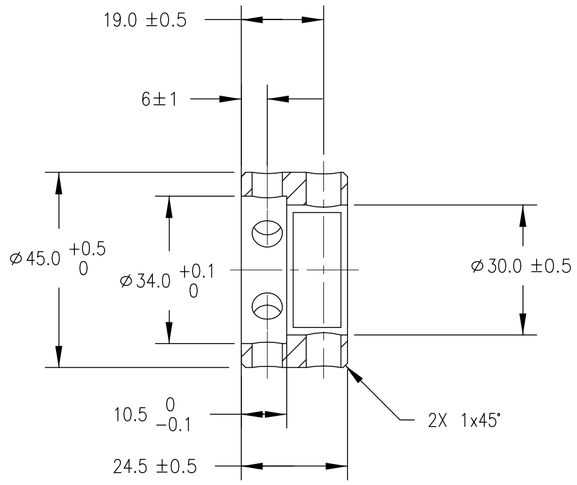

SECTION B–B

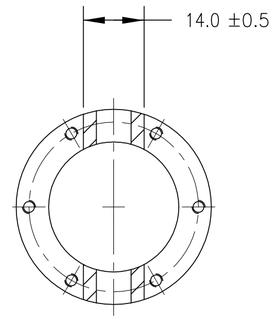

SECTION C–C

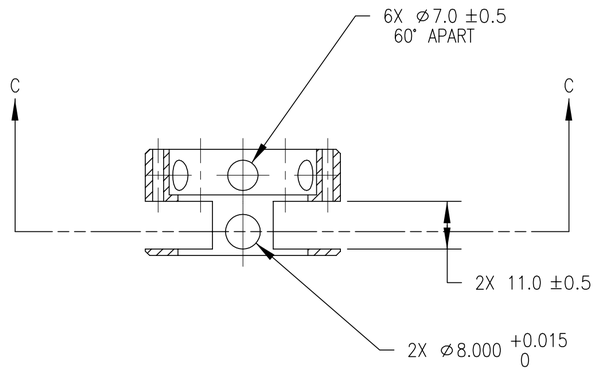

SECTION A–A

NOTES:

1. REMOVE ALL BURRS AND BREAK ALL SHARP EDGES.
2. FINISH: SILVER ANODIZE

ITEM NO.	QTY	PART NO.	DESCRIPTION

PART LIST

UNITS ARE millimeters

TOLERANCES ARE: *

DECIMALS:
X ±0.5
.X ±0.1
.XX ±0.05

ANGLES: ±0.5°

MACHINED: 63

* unless otherwise noted

MATERIAL: ALUM. 6082

SCALE: 1.000

APPROVALS	DATE
DRAWN	
CHECKED	
ENGINEER	

NATIONAL HIGHWAY TRAFFIC SAFETY ADMINISTRATION

POTENTIOMETER HOUSING

SIZE	SHEET	DRAWING NUMBER	REV.
A2	1 OF 1	175–9021	A

REVISION RECORD			
REV.	DESCRIPTION	DATE	BY
A	NHTSA PART 575 NPRM RELEASE	7/30/04	DW

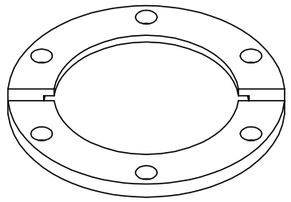

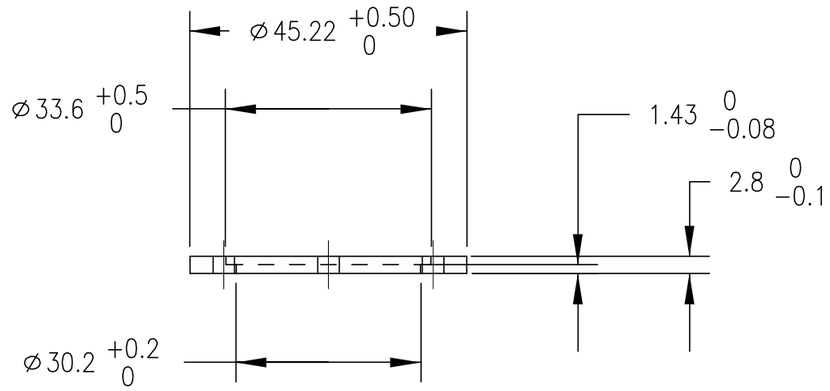

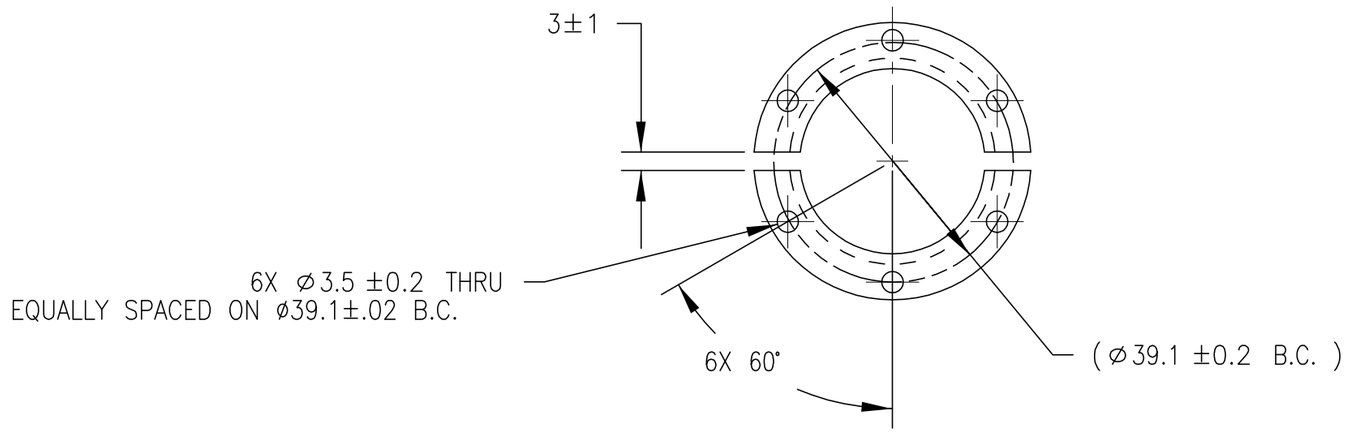

NOTES:

1. REMOVE ALL BURRS AND BREAK ALL SHARP EDGES.
2. FINISH: SILVER ANODIZE

ITEM NO.	QTY	PART NO.	DESCRIPTION

PART LIST

UNITS ARE millimeters

TOLERANCES ARE: *

DECIMALS:
X ±0.5
.X ±0.1
.XX ±0.05

ANGLES: ±0.5°

MACHINED: 63

* unless otherwise noted

MATERIAL: ALUM. 6082

SCALE: 1.000

APPROVALS	DATE
DRAWN	
CHECKED	
ENGINEER	

NATIONAL HIGHWAY TRAFFIC SAFETY ADMINISTRATION

SIZE	SHEET	DRAWING NUMBER	REV.
A3	1 OF 1	175-9022	A

REVISION RECORD			
REV.	DESCRIPTION	DATE	BY
A	NHTSA PART 575 NPRM RELEASE	7/30/04	DW

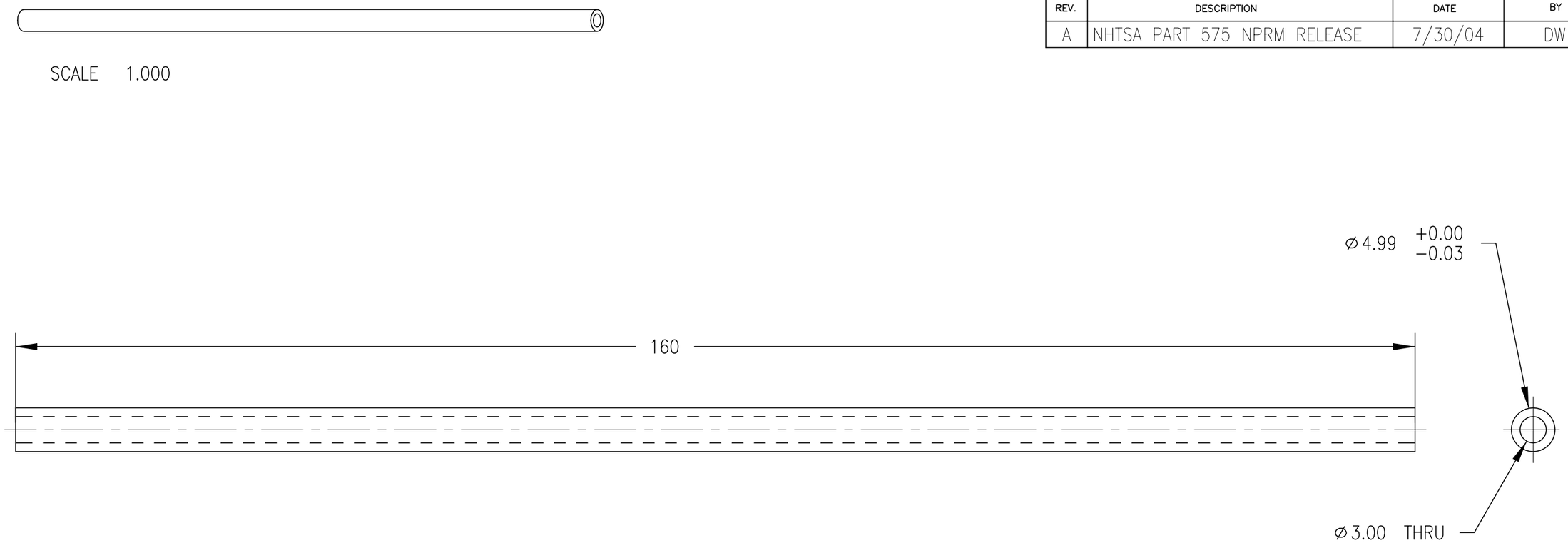

NOTES:

1. REMOVE ALL BURRS AND BREAK ALL SHARP EDGES.

ITEM NO.	QTY	PART NO.	DESCRIPTION

PART LIST

UNITS ARE millimeters

TOLERANCES ARE: *

DECIMALS:
X ±0.5
.X ±0.1
.XX ±0.05

ANGLES: ±0.5°

MACHINED: 63

* unless otherwise noted

MATERIAL: CARBON FIBER/ARROW SHAFT

SCALE: 2.000

APPROVALS	DATE
DRAWN	
CHECKED	
ENGINEER	

NATIONAL HIGHWAY TRAFFIC SAFETY ADMINISTRATION

ARROW SHAFT

SIZE	SHEET	DRAWING NUMBER	REV.
A3	1 OF 1	175-9023	A

REVISION RECORD			
REV.	DESCRIPTION	DATE	BY
A	NHTSA PART 575 NPRM RELEASE	7/30/04	DW

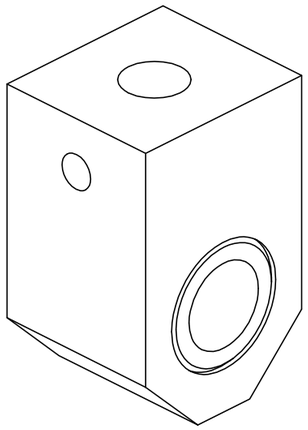

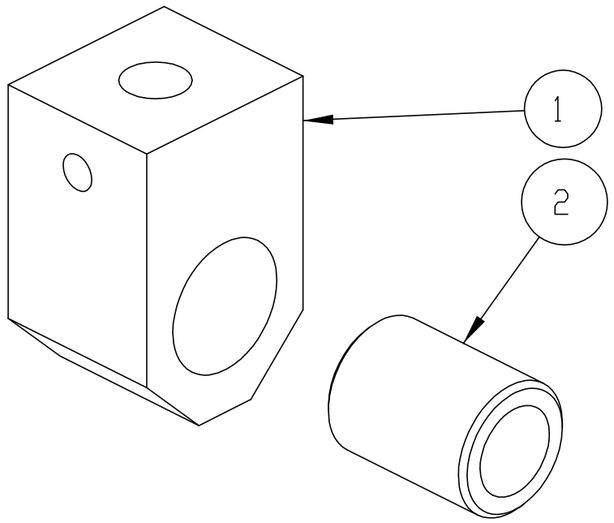

ITEM NO.	QTY	PART NO.	DESCRIPTION
2	1	175-9026	BEARING
1	1	175-9025	COUPLING

PART LIST

UNITS ARE millimeters

TOLERANCES ARE: *

DECIMALS:
X ±0.5
.X ±0.1
.XX ±0.05

ANGLES: ±0.5°

MACHINED: 63

* unless otherwise noted

MATERIAL

SCALE 2.000

APPROVALS	DATE
DRAWN	
CHECKED	
ENGINEER	

NATIONAL HIGHWAY TRAFFIC SAFETY ADMINISTRATION

COUPLING ASSEMBLY

SIZE	SHEET	DRAWING NUMBER	REV.
A3	1 OF 1	175-9024	A

REVISION RECORD			
REV.	DESCRIPTION	DATE	BY
A	NHTSA PART 575 NPRM RELEASE	7/30/04	DW

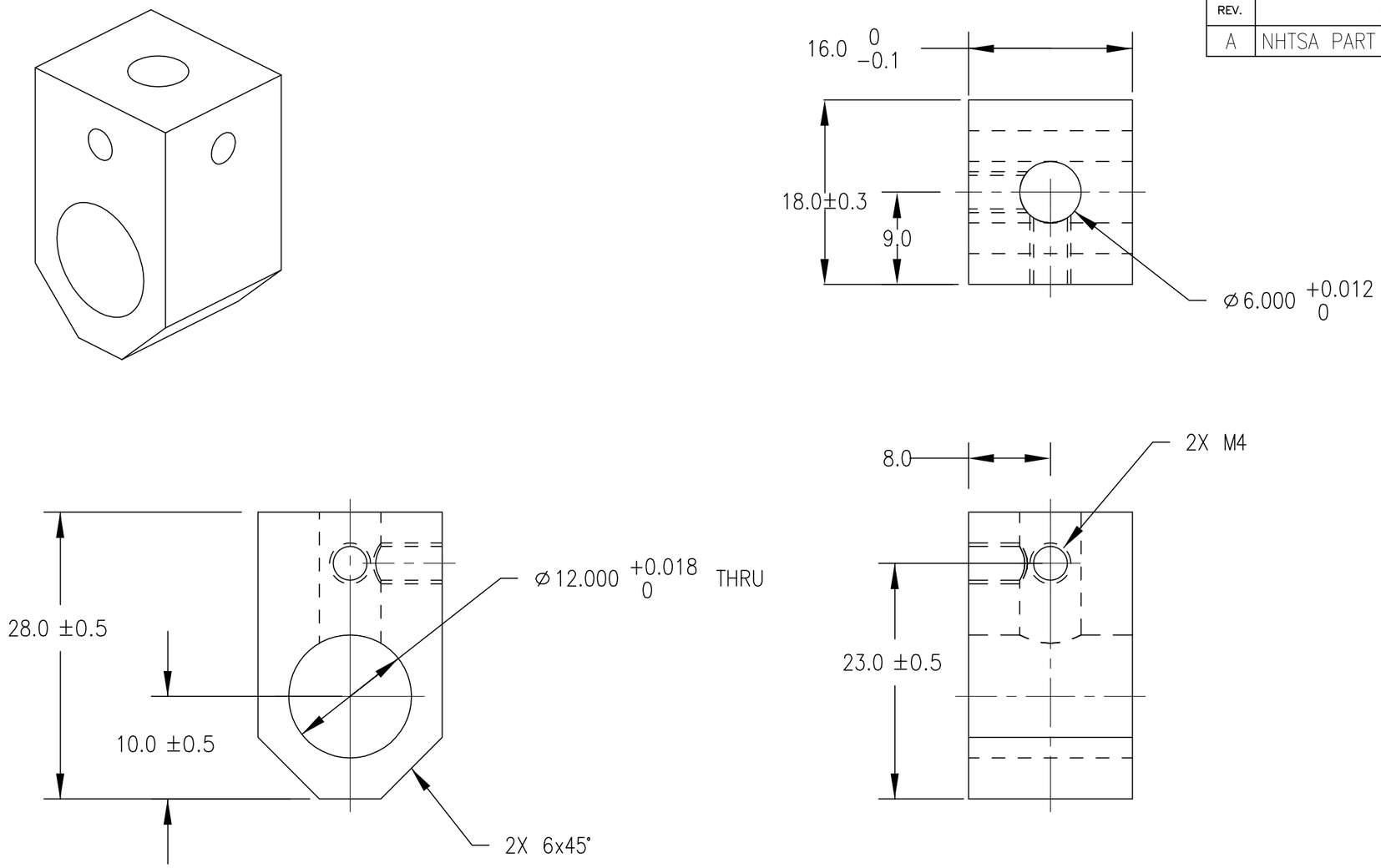

NOTES:

1. REMOVE ALL BURRS AND BREAK ALL SHARP EDGES.
2. FINISH: SILVER ANODIZE

ITEM NO.	QTY	PART NO.	DESCRIPTION

PART LIST

UNITS ARE millimeters

TOLERANCES ARE: *

DECIMALS:
X ±0.5
.X ±0.1
.XX ±0.05

ANGLES: ±0.5°

MACHINED: 63

* unless otherwise noted

		APPROVALS	DATE
MATERIAL	ALUM. 6082		
SCALE	2.000		
DRAWN			
CHECKED			
ENGINEER			

NATIONAL HIGHWAY TRAFFIC SAFETY ADMINISTRATION

COUPLING

SIZE	SHEET	DRAWING NUMBER	REV.
A3	1 OF 1	175-9025	A

REVISION RECORD			
REV.	DESCRIPTION	DATE	BY
A	NHTSA PART 575 NPRM RELEASE	7/30/04	DW

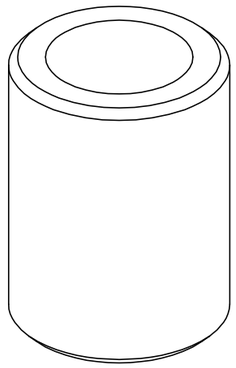

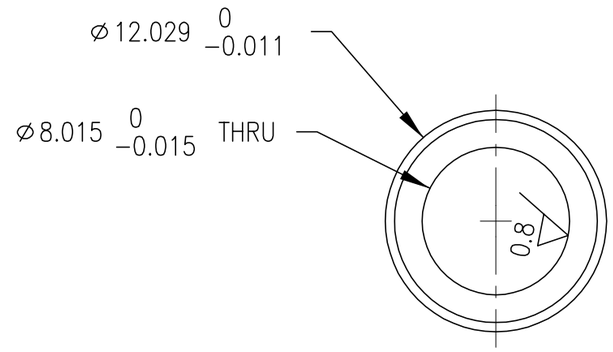

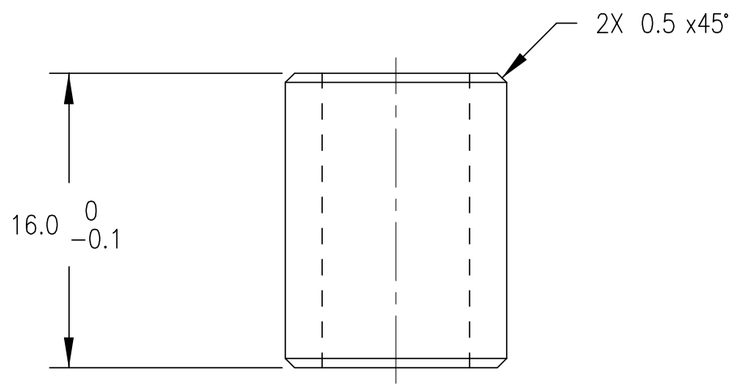

NOTES:

1. REMOVE ALL BURRS AND BREAK ALL SHARP EDGES.

ITEM NO.	QTY	PART NO.	DESCRIPTION

PART LIST

UNITS ARE millimeters

TOLERANCES ARE: *

DECIMALS:
X ±0.5
.X ±0.1
.XX ±0.05

ANGLES: ±0.5°

MACHINED: 63

* unless otherwise noted

MATERIAL	BRONZE		
SCALE	3.000		
APPROVALS		DATE	
DRAWN			
CHECKED			
ENGINEER			

NATIONAL HIGHWAY TRAFFIC SAFETY ADMINISTRATION

BEARING

SIZE	SHEET	DRAWING NUMBER	REV.
A3	1 OF 1	175-9026	A

REVISION RECORD			
REV.	DESCRIPTION	DATE	BY
A	NHTSA PART 575 NPRM RELEASE	7/30/04	DW

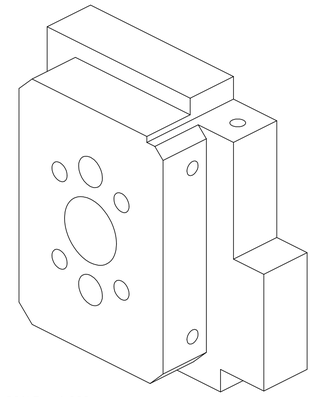

SCALE 1.000

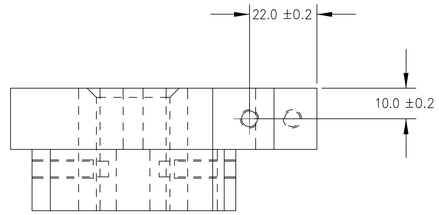

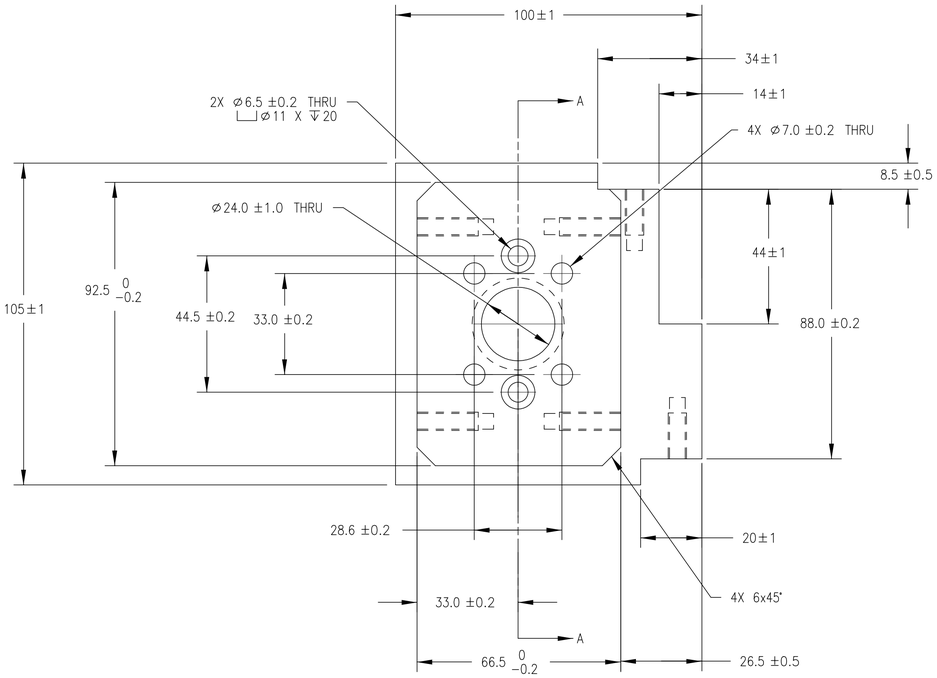

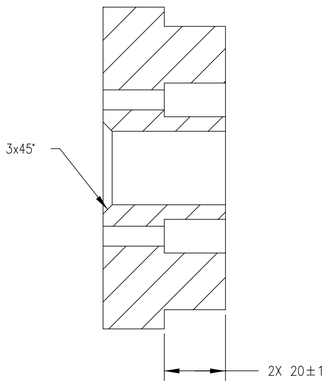

SECTION A–A

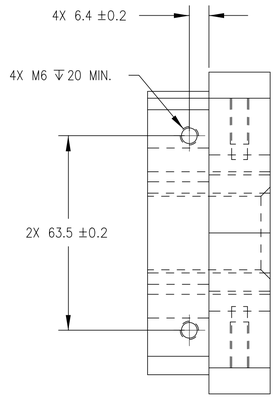

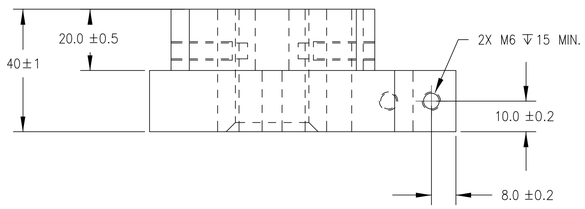

NOTES:

1. REMOVE ALL BURRS AND BREAK SHARP EDGES.
2. FINISH: SILVER ANODIZE

ITEM NO.	QTY	PART NO.	DESCRIPTION

PART LIST

UNITS ARE millimeters

TOLERANCES ARE: *

DECIMALS: X ±0.5, .X ±0.1, .XX ±0.05

ANGLES: ±0.5°

MACHINED: 63

* unless otherwise noted

MATERIAL: ALUM. 6082

SCALE: 1.000

APPROVALS	DATE
DRAWN	
CHECKED	
ENGINEER	

NATIONAL HIGHWAY TRAFFIC SAFETY ADMINISTRATION

LOWER MOUNTING BASE

SIZE	SHEET	DRAWING NUMBER	REV.
A1	1 OF 1	175–9027	A

REVISION RECORD			
REV.	DESCRIPTION	DATE	BY
A	NHTSA PART 575 NPRM RELEASE	7/30/04	DW

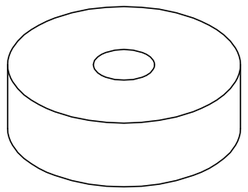

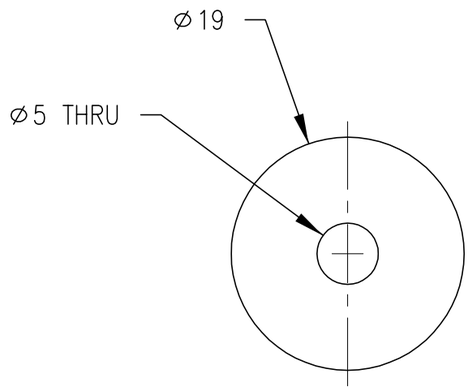

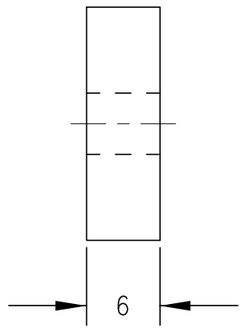

NOTES:

1. REMOVE ALL BURRS AND BREAK ALL SHARP EDGES.

ITEM NO.	QTY	PART NO.	DESCRIPTION

PART LIST

UNITS ARE millimeters

TOLERANCES ARE: *

DECIMALS:
X ±0.5
.X ±0.1
.XX ±0.05

ANGLES: ±0.5°

MACHINED: 63

* unless otherwise noted

		APPROVALS	DATE
MATERIAL	STEEL		
SCALE	2.000		
DRAWN			
CHECKED			
ENGINEER			

NATIONAL HIGHWAY TRAFFIC SAFETY ADMINISTRATION

BALL BEARING

SIZE	SHEET	DRAWING NUMBER	REV.
A3	1 OF 1	175-9028	A

REVISION RECORD			
REV.	DESCRIPTION	DATE	BY
A	NHTSA PART 575 NPRM RELEASE	7/30/04	DW

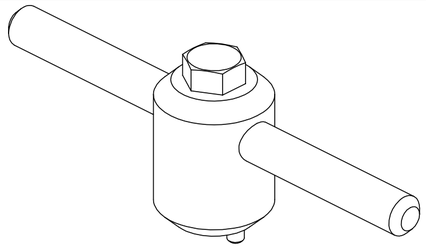

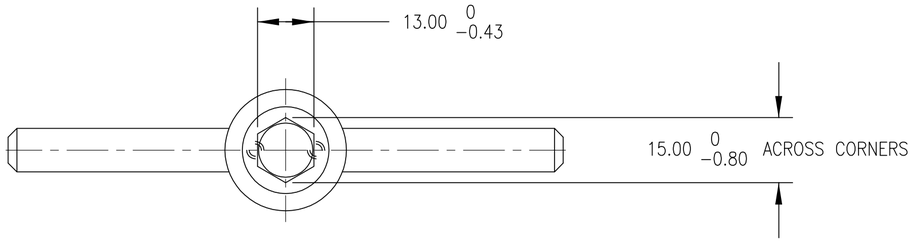

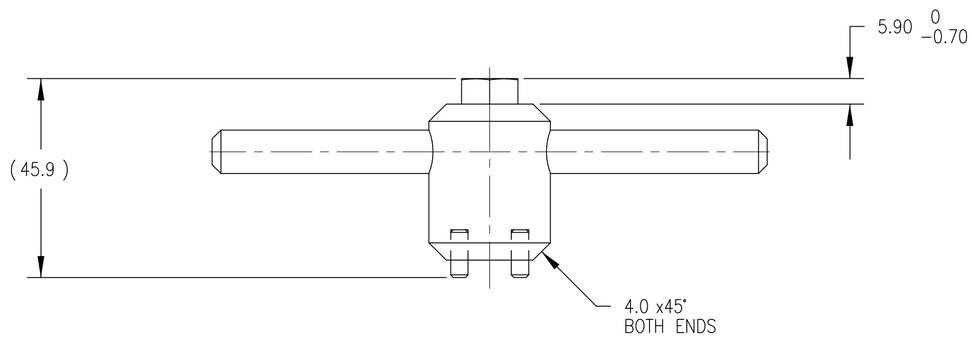

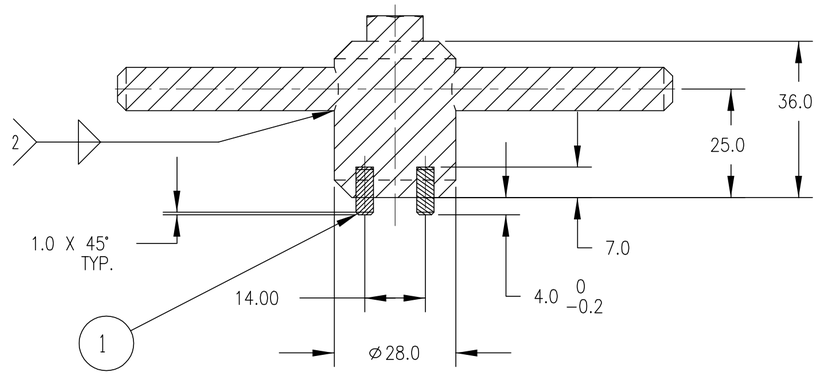

SECTION A-A

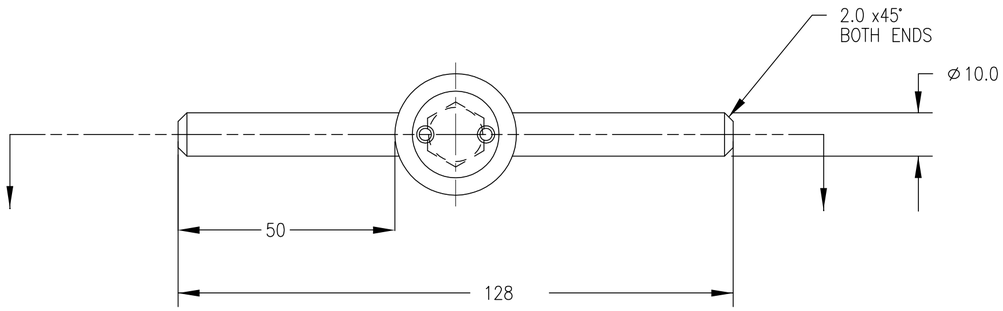

NOTES:

1. REMOVE ALL BURRS AND BREAK SHARP EDGES.
2. SURFACE FINISH TO BE 1.2 OR BETTER ALL OVER UNLESS OTHERWISE STATED.
3. ALL WELDS TO CONFORM TO BS499.
4. BRIGHT NICKEL PLATE THICKNESS 5 TO 8 MICRONS.

ITEM NO.	QTY	PART NO.	DESCRIPTION
1	2	5000424	PIN, DOWEL M4 X 11

PART LIST

UNITS ARE millimeters

TOLERANCES ARE: *

DECIMALS:
X ±0.5
.X ±0.1
.XX ±0.05

ANGLES: ±0.5°

MACHINED: 63

* unless otherwise noted

MATERIAL: 080M40 STEEL TO BS970

SCALE: 1.000

APPROVALS	DATE
DRAWN	
CHECKED	
ENGINEER	

NATIONAL HIGHWAY TRAFFIC SAFETY ADMINISTRATION

NECK COMPRESSION TOOL

SIZE	SHEET	DRAWING NUMBER	REV.
A2	1 OF 1	175-9500	A

REVISION RECORD			
REV.	DESCRIPTION	DATE	BY
A	NHTSA PART 575 NPRM RELEASE	7/30/04	DW

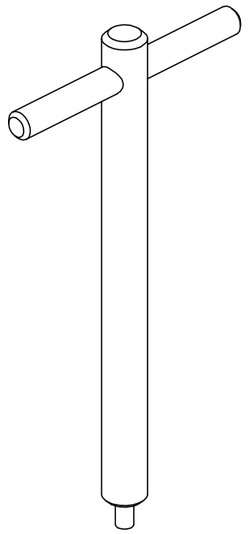

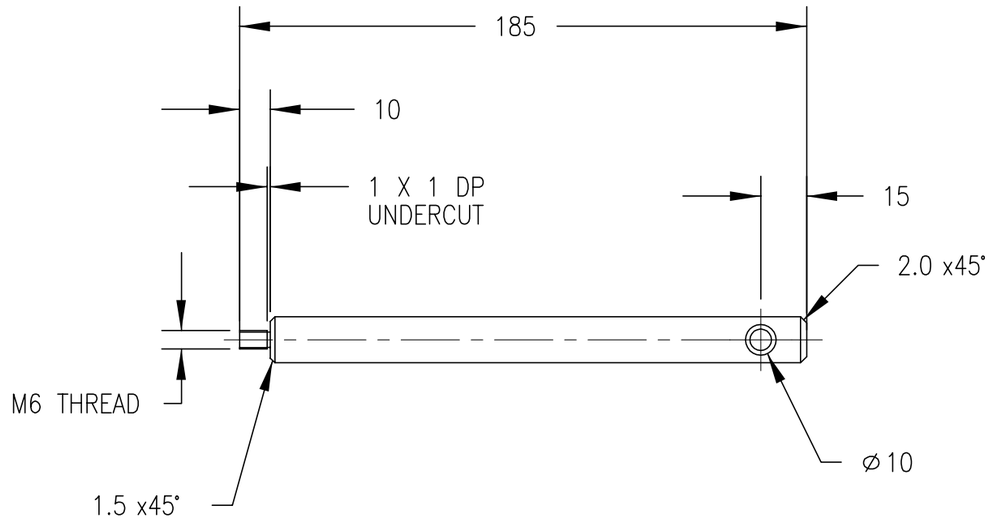

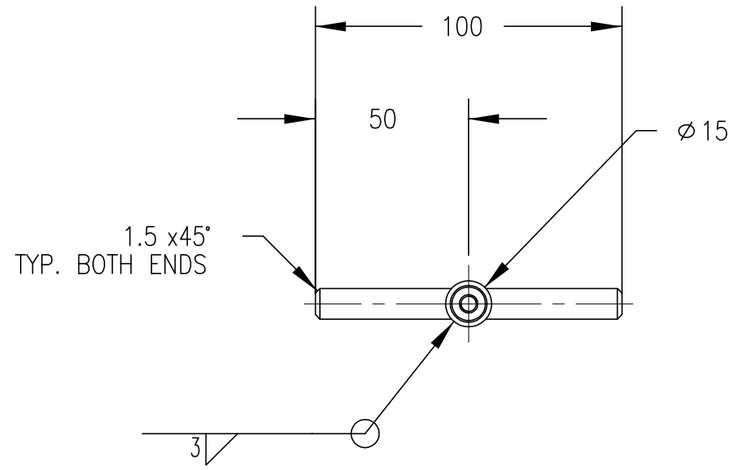

NOTES:

1. SURFACE FINISH TO BE 0.8 OR BETTER ALL OVER UNLESS OTHERWISE STATED.
2. REMOVE ALL BURRS AND BREAK SHARP EDGES PRIOR TO PLATING
3. THREAD TO CONFORM TO BS3643
4. ALL WELDS TO CONFORM TO BS 499
5. BRIGHT NICKEL PLATE 5 TO 8 MICRONS

ITEM NO.	QTY	PART NO.	DESCRIPTION

PART LIST

UNITS ARE millimeters

TOLERANCES ARE: *

DECIMALS:
X ±0.5
.X ±0.1
.XX ±0.05

ANGLES: ±0.5°

MACHINED: 63

* unless otherwise noted

		APPROVALS	DATE
MATERIAL	1018 STEEL		
SCALE	0.500		
DRAWN			
CHECKED			
ENGINEER			

NATIONAL HIGHWAY TRAFFIC SAFETY ADMINISTRATION

PULLER TOOL

SIZE	SHEET	DRAWING NUMBER	REV.
A3	1 OF 1	175-9501	A