Parts List and Drawings
Part 572 Subpart U
EuroSID 2 with Rib Extensions
(ES2re, Alpha Version)

August 2004

Prepared by:
OFFICE OF CRASHWORTHINESS STANDARDS
and
VEHICLE RESEARCH and TEST CENTER
NATIONAL HIGHWAY TRAFFIC SAFETY ADMINISTRATION

REVISION RECORD			
REV.	DESCRIPTION	DATE	BY
A	NHTSA PART 575 NPRM RELEASE	7/30/04	DW

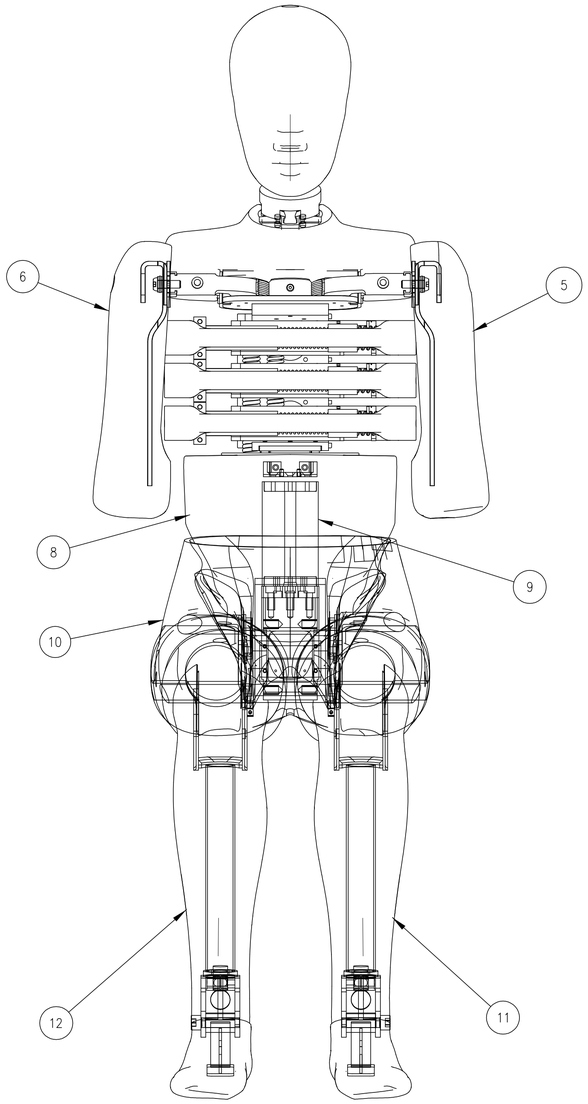

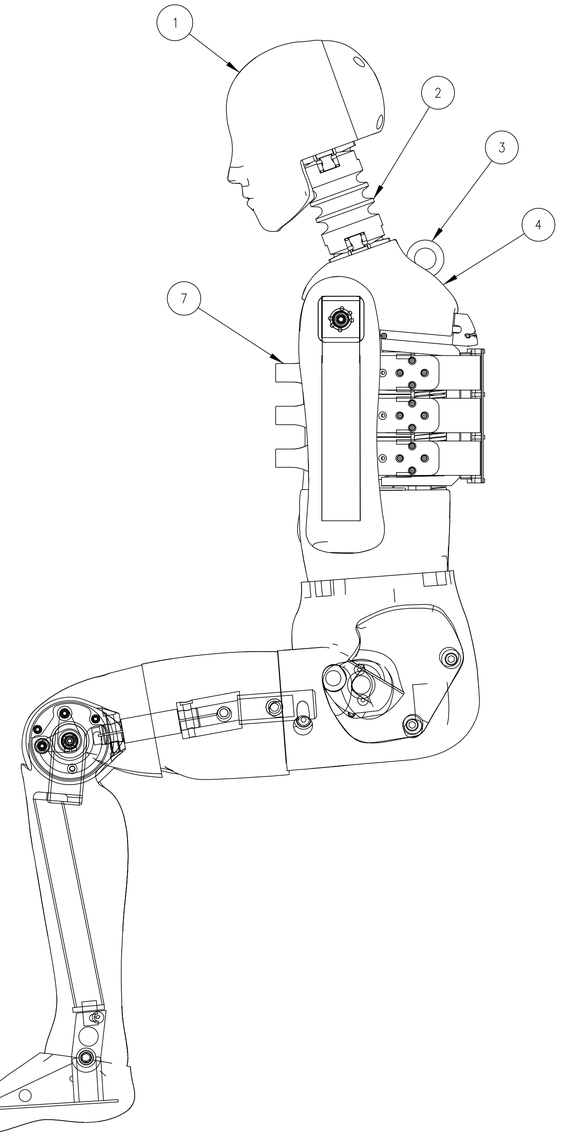

ITEM NO.	QTY	PART NO.	DESCRIPTION
13	1	175–8000	SUIT (NOT SHOWN)
12	1	175–7000–2	LEG ASSEMBLY, RIGHT
11	1	175–7000–1	LEG ASSEMBLY, LEFT
10	1	175–6000	PELVIS ASSEMBLY
9	1	175–5500	LUMBAR SPINE ASSEMBLY
8	1	175–5000	ABDOMINAL ASSEMBLY
7	1	175–4000	THORAX ASSEMBLY WITH RIB EXTENSION'S
6	1	175–3800	ARM ASSEMBLY, RIGHT
5	1	175–3500	ARM ASSEMBLY, LEFT
4	1	175–3000	SHOULDER ASSEMBLY
3	1	175–2500	NECK BRACKET INCLUDING LIFTING EYEBOLT
2	1	175–2000	NECK ASSEMBLY TEST/CERT
1	1	175–1000	HEAD ASSEMBLY

PART LIST

UNITS ARE millimeters

TOLERANCES ARE: *

DECIMALS:
X ±0.5
.X ±0.1
.XX ±0.05

ANGLES: ±0.5°

MACHINED: 63

* unless otherwise noted

MATERIAL

SCALE 0.250

APPROVALS	DATE
DRAWN	
CHECKED	
ENGINEER	

NATIONAL HIGHWAY TRAFFIC SAFETY ADMINISTRATION

ASSEMBLY, EUROSID 2
WITH RIB EXTENSIONS

SIZE A1 | SHEET 1 OF 4 | DRAWING NUMBER 175–0000 | REV. A

REVISION RECORD			
REV.	DESCRIPTION	DATE	BY
A	NHTSA PART 575 NPRM RELEASE	7/30/04	DW

HEAD	PART NUMBER	QTY
HEAD ASSEMBLY	175-1000	1
ACCELEROMETER	SA372-S4	3

NECK	PART NUMBER	QTY
NECK ASSEMBLY	175-2000	1

THORAX	PART NUMBER	QTY
NECK BRACKET (NOT INCLUDING 175-2505 LIFTING EYEBOLT)	175-2500	1
SHOULDER ASSEMBLY	175-3000	1
SCREW BHCS M10 X 30	5000040	1
THRUST BEARING 10.5 I.D.	5000104	1
WASHER, FLAT M10	5000105	2
THORAX ASSEMBLY	175-4000	1
ABDOMINAL ASS'Y (NOT INCLUDING 175-5010 ABDOMEN MOLDED ASS'Y)	175-5000	1
ABDOMINAL FORCE TRANSDUCER OR REPLACEMENT	175-5003	3
2/3 OF SUIT	175-8000	1

ARM LEFT	PART NUMBER	QTY
ARM FLESH ASSEMBLY	175-3501	1
PIVOT STOP PLATE LEFT	175-3502	1

ARM RIGHT	PART NUMBER	QTY
ARM FLESH ASSEMBLY	175-3501	1
PIVOT STOP PLATE RIGHT	175-3503	1

ABDOMEN	PART NUMBER	QTY
ABDOMEN MOLDED ASSEMBLY	175-5010	1
LUMBAR SPINE ASSEMBLY	175-5500	1

PELVIS	PART NUMBER	QTY
PELVIS ASSEMBLY	175-6000	1
1/3 OF SUIT	175-8000	1

LEG LEFT	PART NUMBER	QTY
LEG ASSEMBLY LEFT	175-7000-1	1

LEG RIGHT	PART NUMBER	QTY
LEG ASSEMBLY RIGHT	175-7000-2	1

ASSEMBLY WEIGHTS		
SEGMENT WEIGHTS	SPECIFIED WEIGHTS	
	Kg	kg
HEAD	4.0	±0.2
NECK	1.0	±0.05
THORAX	22.4	±1.0
ARM LEFT	1.3	±0.1
ARM RIGHT	1.3	±0.1
ABDOMEN	5.0	±0.25
PELVIS	12.0	±0.6
LEG LEFT	12.7	±0.6
LEG RIGHT	12.7	±0.6
TOTAL	72.0	±12

CENTER OF GRAVITY			
DUMMY SEGMENT	C.G. DIR.	SPEC. MM.	TOL. MM. ±
HEAD	X	61.5	2.5
	Y	39.7	2.5

NATIONAL HIGHWAY TRAFFIC SAFETY ADMINISTRATION

ASSEMBLY, EUROSID 2
WITH RIB EXTENSIONS

SIZE	DRAWING NUMBER	REV.
A1	175-0000	A
SCALE 1.000	SHEET 2 OF 4	

REVISION RECORD			
REV.	DESCRIPTION	DATE	BY
A	NHTSA PART 575 NPRM RELEASE	7/30/04	DW

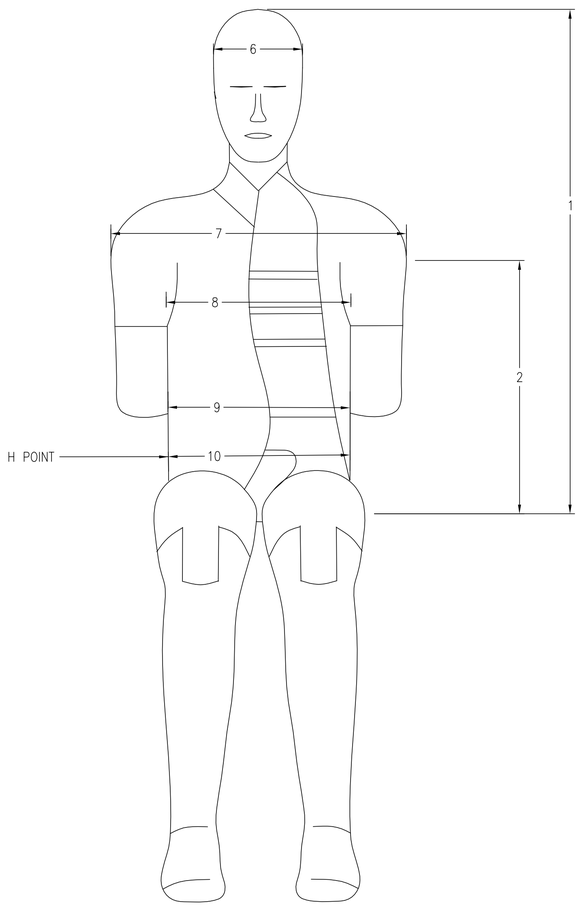

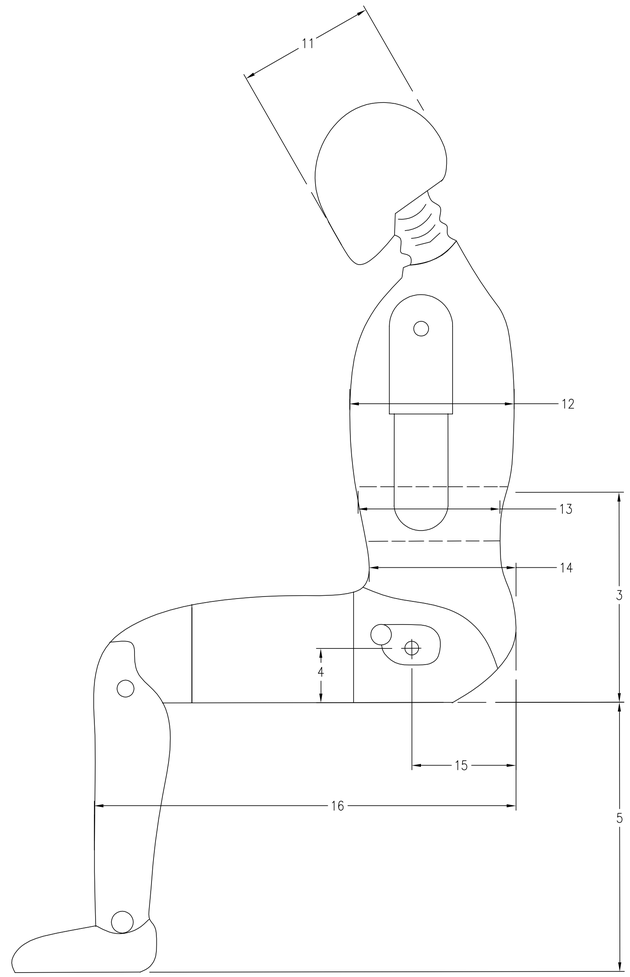

NO.	DIMENSIONS	VALUE (mm)
1	SITTING HEIGHT	909±9
2	SEAT TO SHOULDER JOINT	565±7
3	SEAT TO LOWER FACE OF THORACIC SPINE BOX	351±5
4	SEAT TO HIP JOINT (CENTER OF BOLT)	100±3
5	SOLE TO SEAT, SITTING	442±9
6	HEAD WIDTH	155±3
7	SHOULDER/ARM WIDTH	470±9
8	THORAX WIDTH	327±5
9	ABDOMEN WIDTH	280±7
10	PELVIS LAP WIDTH	366±7
11	HEAD DEPTH	201±5
12	THORAX DEPTH	267±5
13	ABDOMEN DEPTH	199±5
14	PELVIS DEPTH	240±5
15	BACK OF BUTTOCKS TO HIP JOINT (CENTER OF BOLT)	155±5
16	BACK OF BUTTOCKS TO FRONT KNEE	606±9

NOTES:

1. THE DIMENSIONS ARE TO BE MEASURED WITHOUT SUIT.

NATIONAL HIGHWAY TRAFFIC SAFETY ADMINISTRATION

ASSEMBLY EUROSID 2
WITH RIB EXTENSIONS

SIZE	DRAWING NUMBER	REV.
A1	175-0000	A
SCALE NA	SHEET 3 OF 4	

REVISION RECORD			
REV.	DESCRIPTION	DATE	BY
A	NHTSA PART 575 NPRM RELEASE	7/30/04	DW

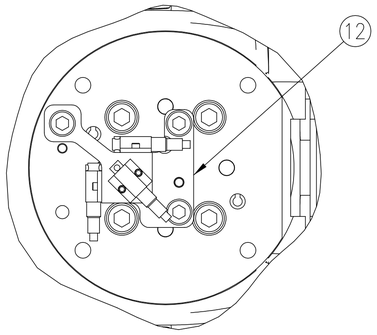

SECTION A-A
SCALE 1.000

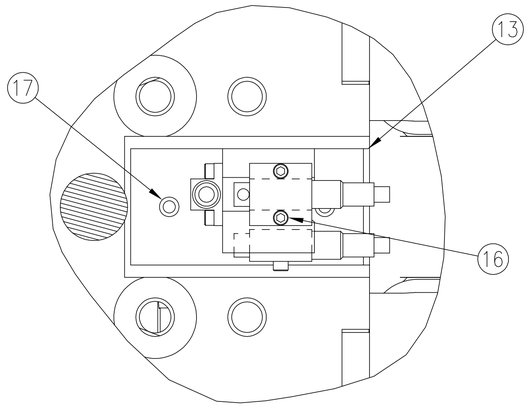

SECTION B-B
SCALE 2.000

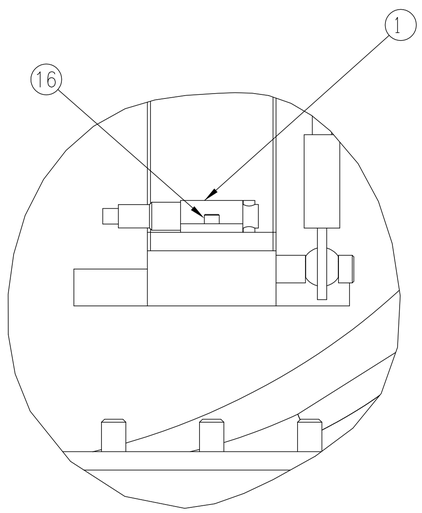

SECTION C-C
SCALE 2.000

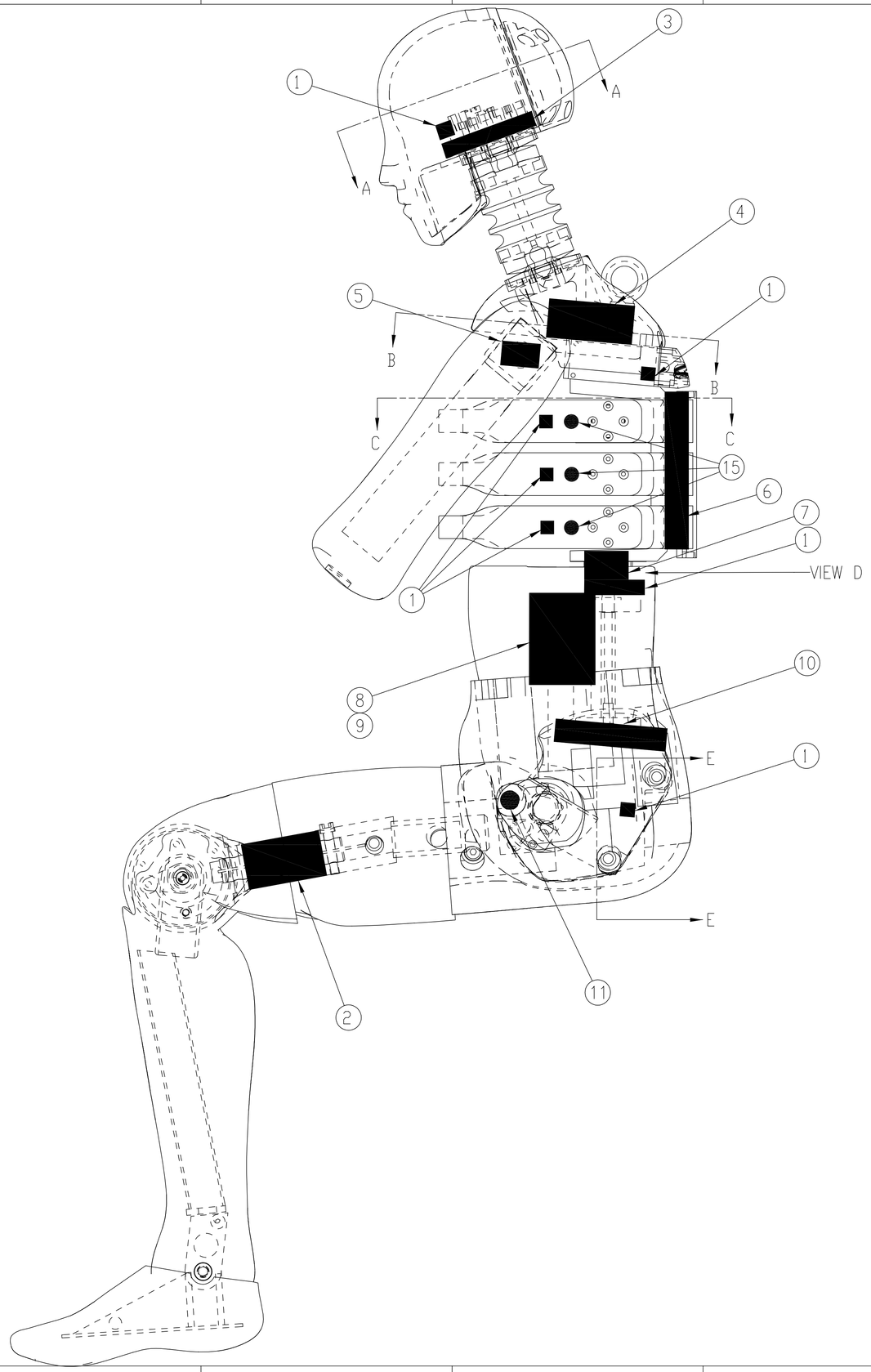

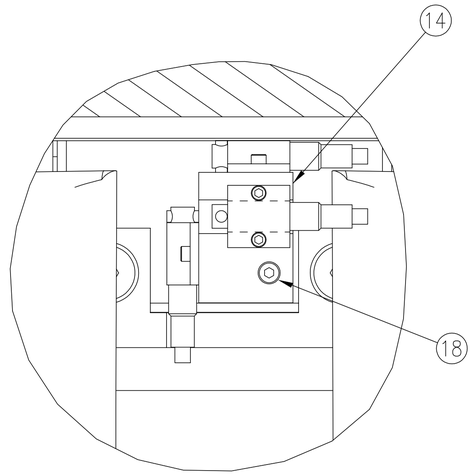

VIEW D-D
SCALE 2.000

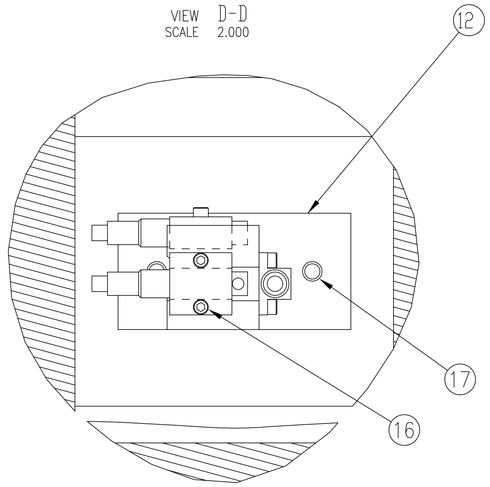

SECTION E-E
SCALE 2.000

ITEM NO.	QTY	PART NO.	DESCRIPTION
18	1		SCREW, SHCS M4 x 0.7 x 16
17	4	5000119	SCREW, SHCS M3 x 0.5 x 10
16	24	5000068	SCREW, SHCS M1.4 x 0.3 x 3
15	3	SA572-S69	LINEAR POSITION TRANSDUCER (REF.)
14	1	SA572-S83	ACCELEROMETER MOUNT BLOCK, SPINE T12, SA572-S4
13	1	SA572-S82	ACCELEROMETER MOUNTING BLOCK, UPPER SPINE/PELVIS, SA572-S4
12	1	SA572-S81	ACCELEROMETER MOUNT, HEAD C.G. (REF.)
11	1	SA572-S77	PUBIC LOAD CELL
10	1	SA572-S76	LUMBAR LOAD CELL
9	3	175-5003	ABDOMEN LOAD CELL STRUCTURAL REPLACEMENT (NON-STRUCK SIDE) (REF.)
8	3	SA572-S75	UNIAXIAL ABDOMEN LOAD CELL (STRUCK SIDE)
7	1	SA572-S74	T12 LOAD CELL
6	1	SA572-S73	4 AXIS BACKPLATE LOAD CELL
5	1	SA572-S72	3 AXIS SHOULDER LOAD CELL
4	1	SA572-S71-1	LOWER NECK LOAD CELL
3	1	SA572-S70	6 AXIS UPPER NECK LOAD CELL
2	2	SA572-S29	SIX - CHANNEL FEMUR LOAD CELL
1	15	SA572-S4	UNIAXIAL ACCELEROMETER

PART LIST

UNITS ARE millimeters

TOLERANCES ARE: *

DECIMALS:
X ±0.5
.X ±0.1
.XX ±0.05

ANGLES: ±0.5°

MACHINED: 63/

* unless otherwise noted

MATERIAL

SCALE N/A

APPROVALS	DATE
DRAWN	
CHECKED	
ENGINEER	

NATIONAL HIGHWAY TRAFFIC SAFETY ADMINISTRATION

ASSEMBLY, EUROSID 2
WITH RIB EXTENSIONS

SIZE	SHEET	DRAWING NUMBER	REV.
A1	4 OF 4	175-0000	A

REVISION RECORD			
REV.	DESCRIPTION	DATE	BY
A	NHTSA PART 575 NPRM RELEASE	7/30/04	DW

LETTER DESIGNATION	BODY PART	ANGULAR MOTION DEG.	
A B C D	HEAD DORSAL FLEXION HEAD VENTRAL FLEXION HEAD LATERAL FLEXION HEAD ROTATION	60 MIN 60 MIN 60 MIN 60 MIN	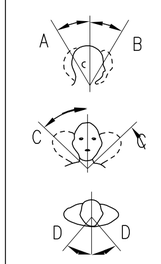
E F	TORSO LATERAL FLEXION TORSO ROTATION ABOUT LONG AXIS	30 MIN 20 MIN	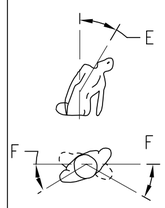
G H	SHOULDER FLEXION SHOULDER EXTENSION	150 MIN 100 MIN	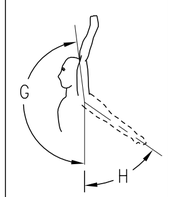
L	SHOULDER PROTRACTION	60 MIN	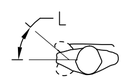
Y	KNEE VOLUNTARY FLEXION	150 MIN	
CC DD	ANKLE DORSIFLEXION ANKLE PLANTAR FLEXION	15 MIN 30 MIN	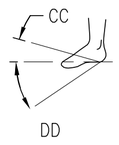

NATIONAL HIGHWAY TRAFFIC SAFETY ADMINISTRATION

ASSEMBLY, EUROSID 2
WITH RIB EXTENSIONS

SIZE	DRAWING NUMBER	REV.
A2	175–0000	A
SCALE NA	SHEET 5 OF 5	

REVISION RECORD			
REV.	DESCRIPTION	DATE	BY
A	NHTSA PART 575 NPRM RELEASE	7/30/04	DW

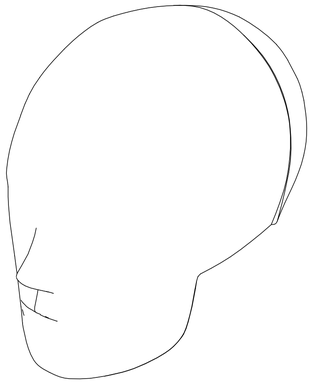

SCALE 0.500

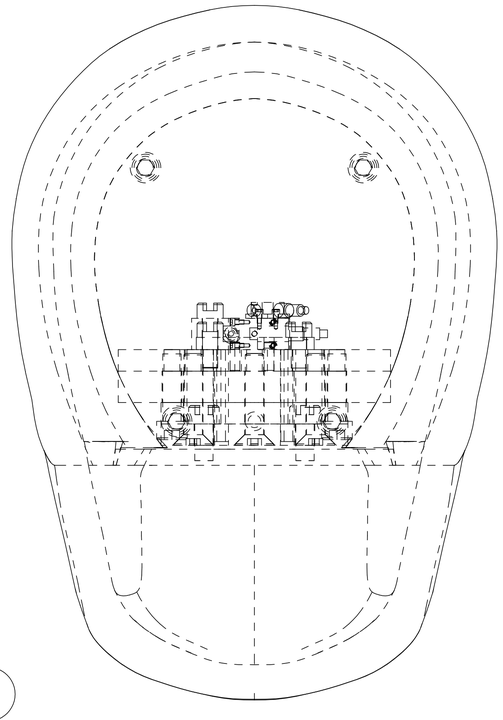

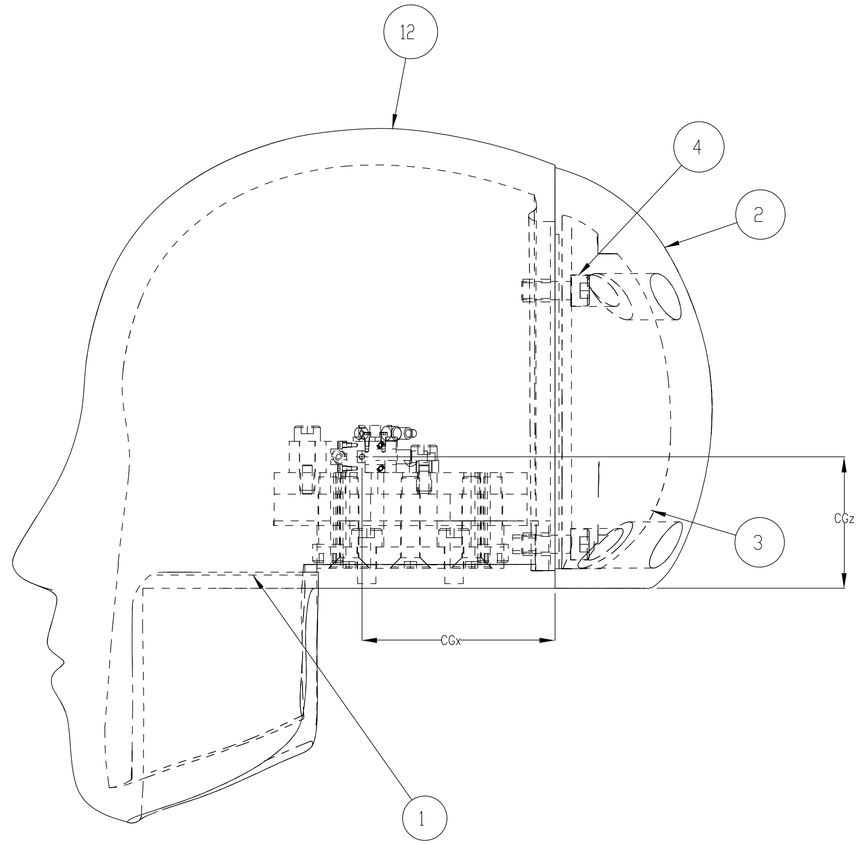

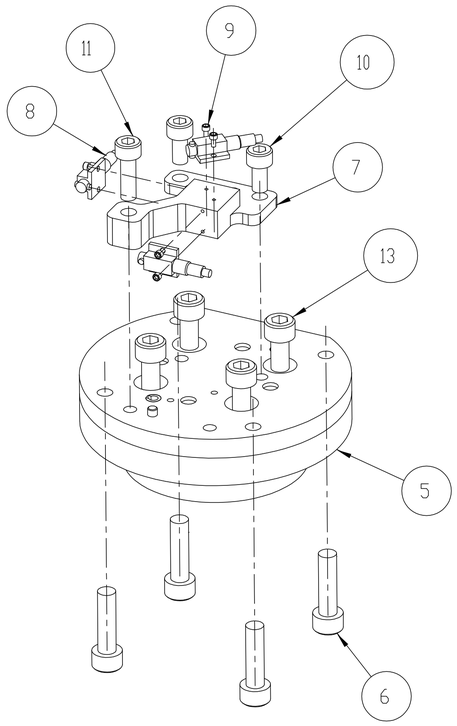

HEAD & CAP, SKIN & SKULL OMITTED FROM THIS VIEW.

ITEM NO.	QTY	PART NO.	DESCRIPTION
13	4	5000281	SCREW, SHCS M6 X 12
12	1	175-1005	HEAD SKIN
11	1	5000020	SCREW, SHCS M5 X .8 X 16
10	2	5000291	SCREW, SHCS M5 X .8 X 10
9	6	5000068	SCREW, SHCS M1.4 X 0.3 X 3
8	3	SA572-S4	UNIAXIAL ACCELEROMETER
7	1	SA572-S81	ACCELEROMETER MOUNT, HEAD C.G.
6	4	5000282	SCREW, SHCS M6 X 1 X 22
5	1	175-1010	UPPER NECK LOAD CELL STRUCTURAL REPLACEMENT
4	4	5000081	SCREW, SHCS M6 X 1 X 16
3	1	175-1003	SKULL CAP
2	1	175-1006	SKULL CAP SKIN
1	1	175-1001	SKULL MACHINED

PART LIST

UNITS ARE millimeters

TOLERANCES ARE: *
DECIMALS: X ±0.5, .X ±0.1, .XX ±0.05
ANGLES: ±0.5°
MACHINED: 63
* unless otherwise noted

MATERIAL
SCALE 1.000

APPROVALS	DATE
DRAWN	
CHECKED	
ENGINEER	

NATIONAL HIGHWAY TRAFFIC SAFETY ADMINISTRATION

HEAD ASSEMBLY

SIZE	SHEET	DRAWING NUMBER	REV.
A1	1 OF 1	175-1000	A

REVISION RECORD			
REV.	DESCRIPTION	DATE	BY
A	NHTSA PART 575 NPRM RELEASE	7/30/04	DW

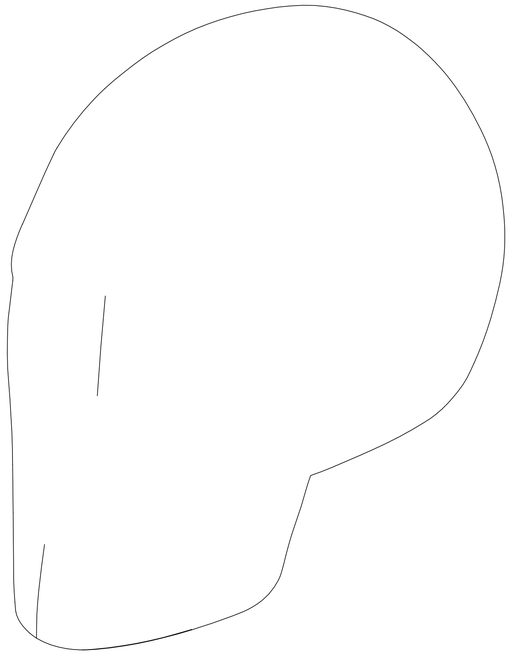

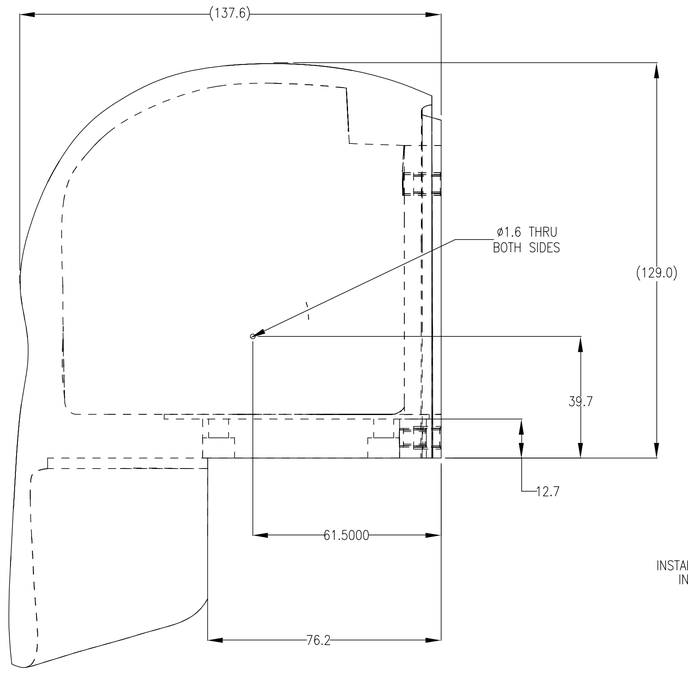

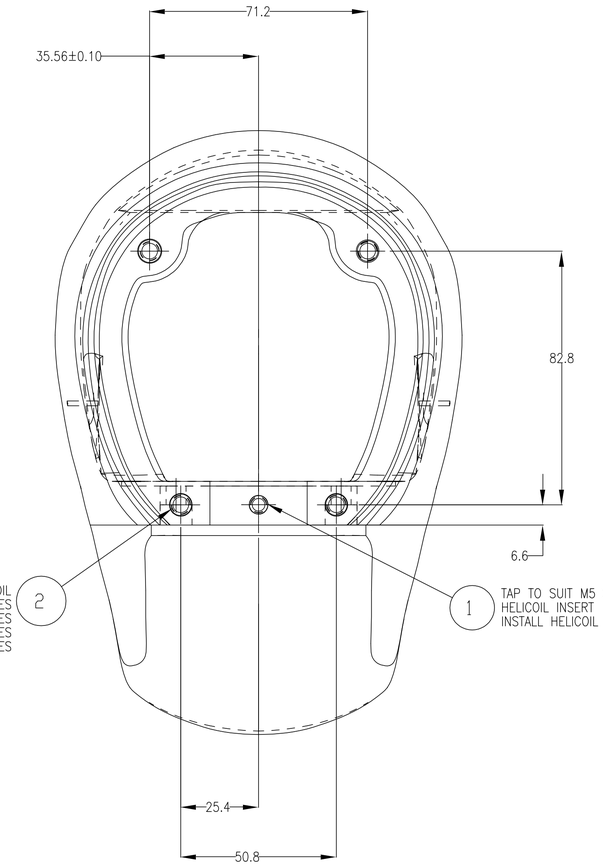

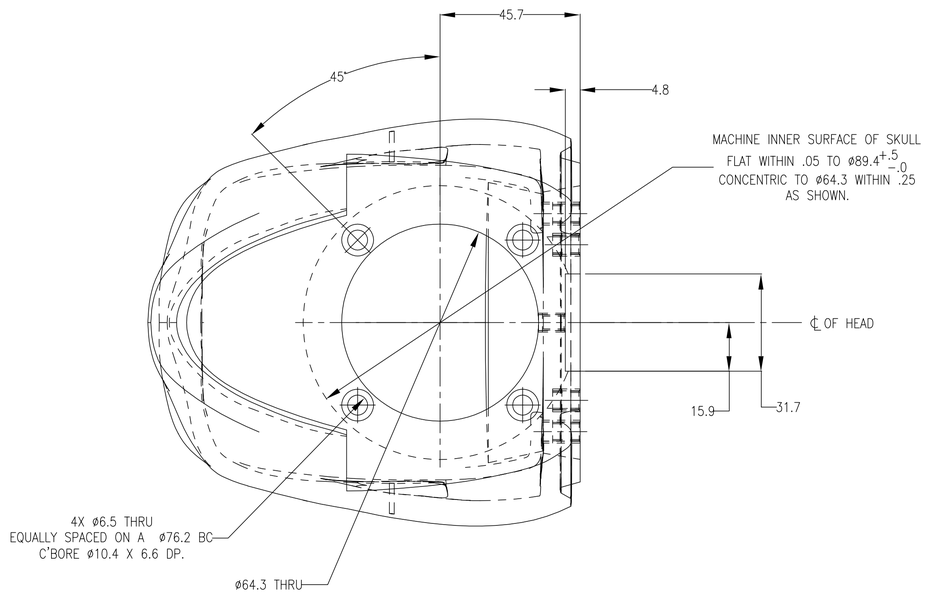

NOTES:

1. REMOVE ALL BURRS AND BREAK SHARP EDGES.
2. MATERIAL: (AA) 357.0
   (UNS) A03570

ITEM NO.	QTY	PART NO.	DESCRIPTION
2	4	5000088	HELICOIL, M6 X 1 X 9
1	1	5000086	HELICOIL, M5 X .8 X 7.5

PART LIST

UNITS ARE millimeters

TOLERANCES ARE: *

DECIMALS:
X ±0.5
.X ±0.1
.XX ±0.05

ANGLES: ±0.5°

MACHINED: 63

* unless otherwise noted

MATERIAL: SEE NOTES

SCALE: 1.000

APPROVALS	DATE
DRAWN	
CHECKED	
ENGINEER	

NATIONAL HIGHWAY TRAFFIC SAFETY ADMINISTRATION

SKULL MACHINED

SIZE	SHEET	DRAWING NUMBER	REV.
A1	1 OF 1	175-1001	A

REVISION RECORD			
REV.	DESCRIPTION	DATE	BY
A	NHTSA PART 572 NPRM RELEASE	7/30/04	DMW

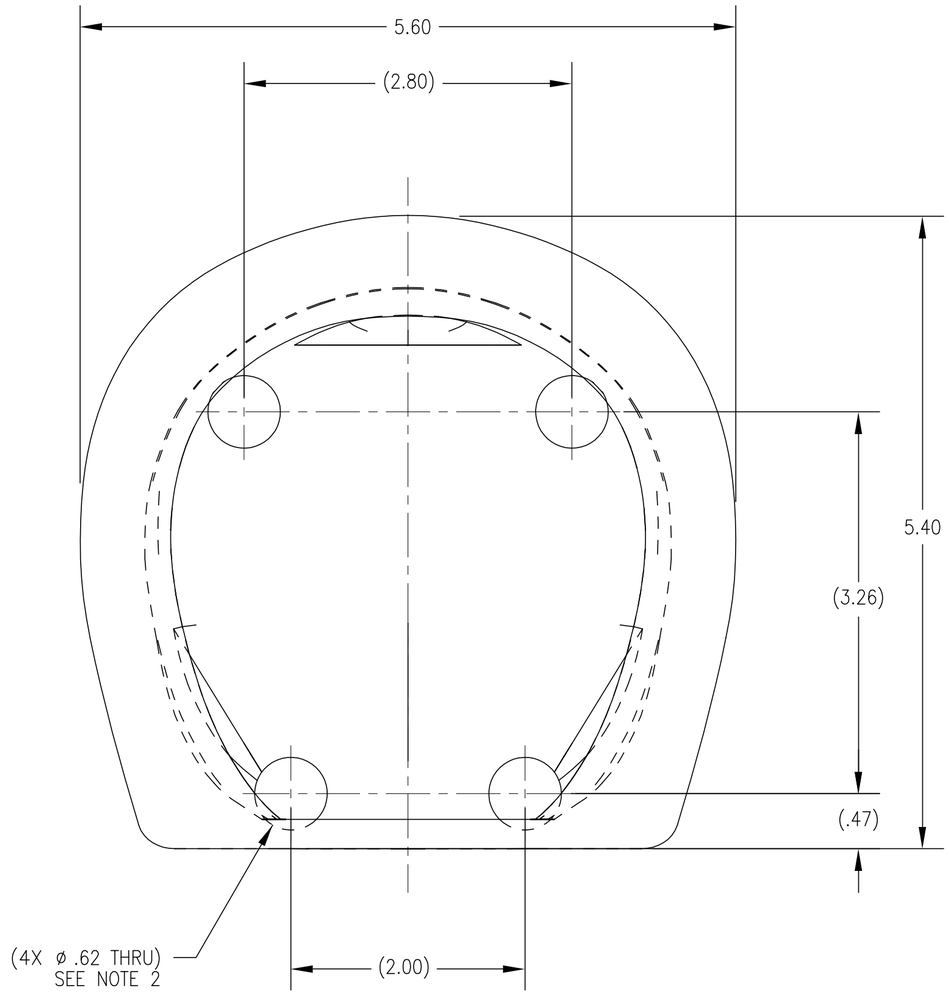

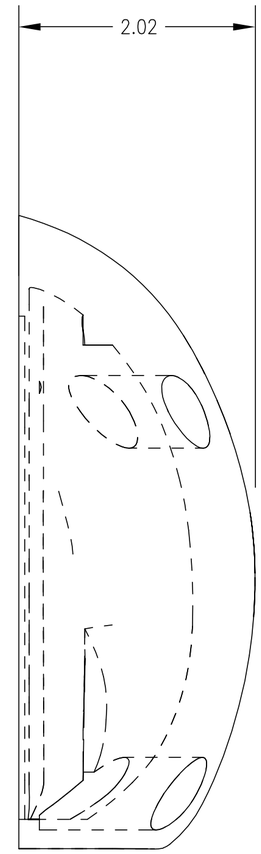

NOTES:

1. MATERIAL: PT-4 VINYL, 30-50 SHORE "A".
2. HOLES ALIGN WITH HOLE PATTERN ON MACHINED SKULL CAP, CLEAR ENOUGH FOR SCREW AND WRENCH ACCESS.
3. UNLESS OTHERWISE SPECIFIED APPLY ±.20 TOLERANCE TO ALL DIMENSIONS.

ITEM NO.	QTY	FSCM NO.	PART NO.	DESCRIPTION

PART LIST

UNITS ARE inches

TOLERANCES ARE: *

DECIMALS:
.X ±0.1
.XX ±0.01
.XXX ±0.005
FRACTIONS ±1/64

ANGLES: ±0.5°

MACHINED: 63

* unless otherwise noted

MATERIAL: SEE NOTES

SCALE: 1.000

APPROVALS	DATE
DRAWN	
CHECKED	
ENGINEER	

NATIONAL HIGHWAY TRAFFIC SAFETY ADMINISTRATION

SKULL CAP SKIN

SIZE	SHEET	DRAWING NUMBER	REV.
C	1 OF 1	175-1006	A

REVISION RECORD			
REV.	DESCRIPTION	DATE	BY
A	NHTSA PART 572 NPRM RELEASE	7/30/04	DMW

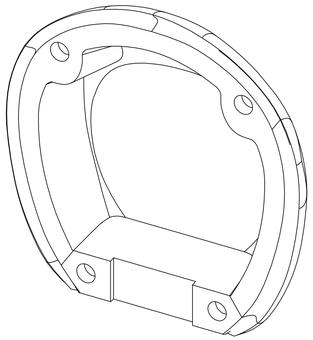

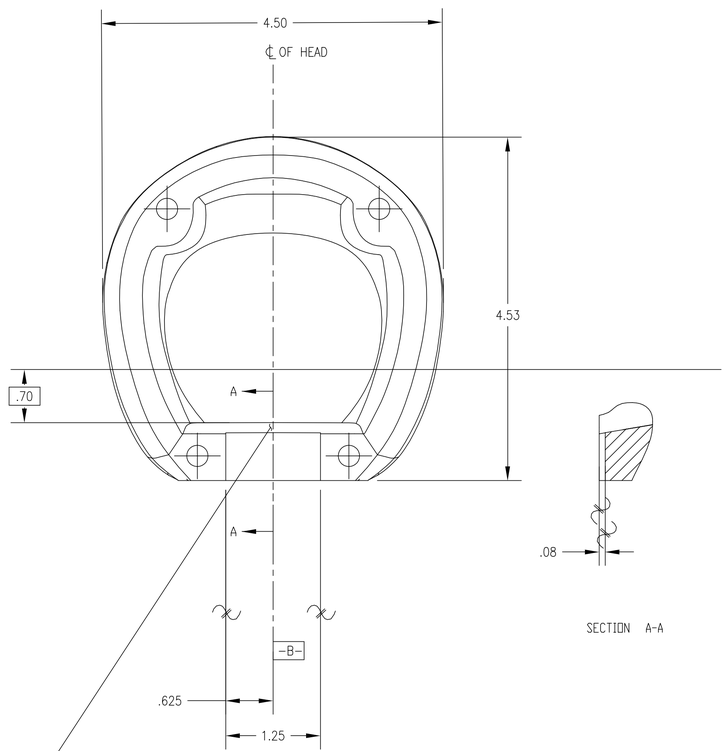

SECTION A-A

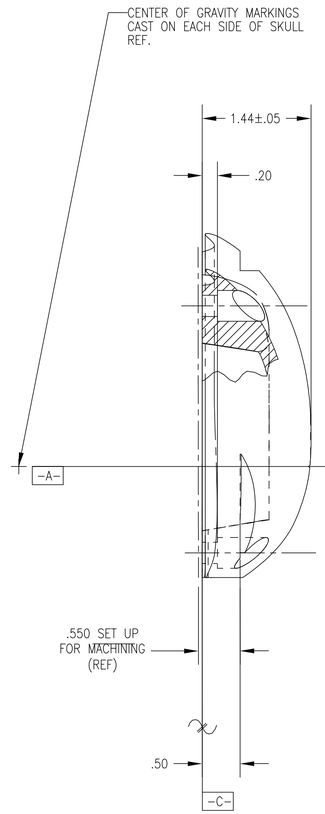

PARTIAL SECTION B-B

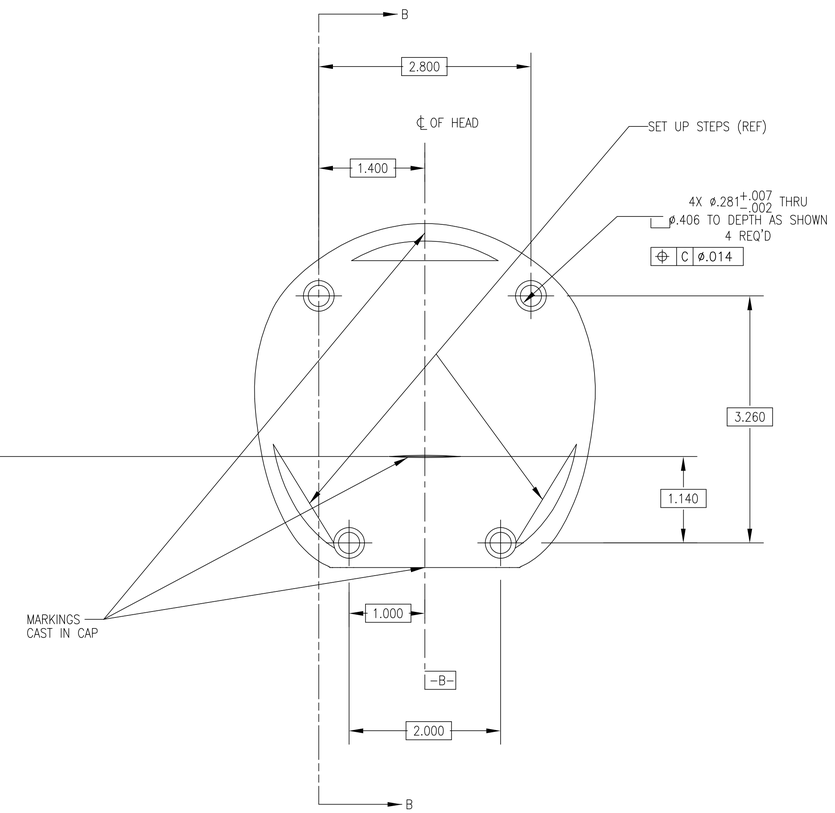

MARK PART NUMBER, REVISION LETTER, AND SERIAL NUMBER USING VIBRO-PENCIL IN THIS AREA.

NOTES:

1. MUST BE FREE FROM BURRS AND SHARP EDGES.
2. ALL RADII .03, UNLESS OTHERWISE SPECIFIED.
3. MATERIAL: (AA) 357.0
   (UNS) A 03570

ITEM NO.	QTY	FSCM NO.	PART NO.	DESCRIPTION

PART LIST

UNITS ARE inches

TOLERANCES ARE: *
DECIMALS: .X ±0.1, .XX ±0.01, .XXX ±0.005
FRACTIONS ±1/64
ANGLES: ±0.5°
MACHINED: 63
* unless otherwise noted

MATERIAL: SEE NOTES
SCALE: 1.000

APPROVALS	DATE
DRAWN	
CHECKED	
ENGINEER	

NATIONAL HIGHWAY TRAFFIC SAFETY ADMINISTRATION

SKULL CAP

SIZE	SHEET	DRAWING NUMBER	REV.
D	1 OF 1	175-1003	A

REVISION RECORD			
REV.	DESCRIPTION	DATE	BY
A	NHTSA PART 572 NPRM RELEASE	7/30/04	DW

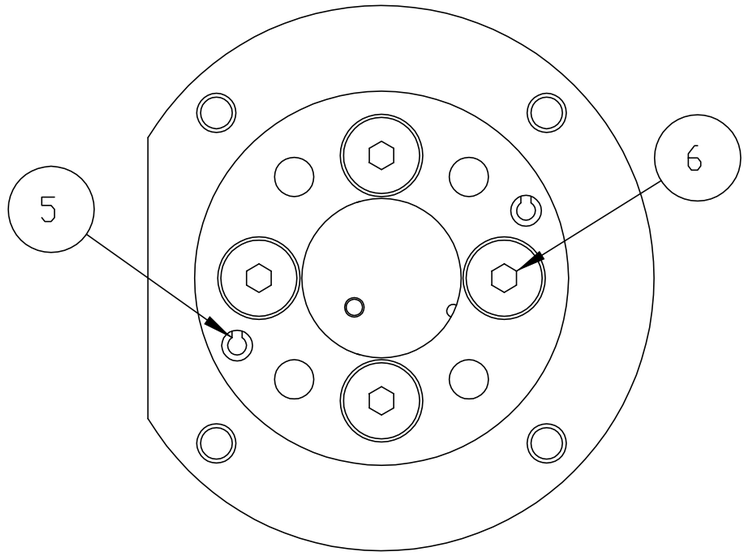

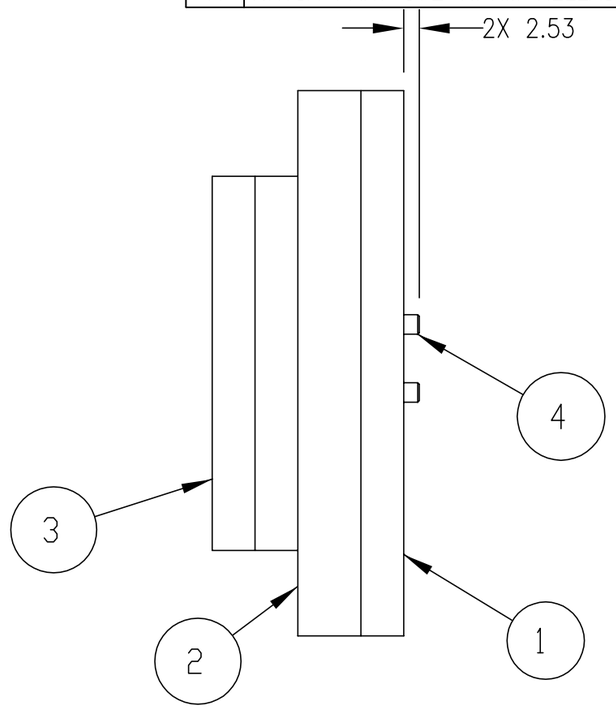

ITEM NO.	QTY	PART NO.	DESCRIPTION
6	4	5000265	SCREW, FHCS M6 X 30
5	2	5000353	ROLL PIN, M5 X 30
4	2	9000046	PIN, DOWEL 1/8 X 3/8
3	1	175-1013	BOTTOM PLATE UNLC BLANK
2	1	175-1012	MIDDLE PLATE UNLC BLANK
1	1	175-1011	TOP PLATE UNLC BLANK

PART LIST

UNITS ARE millimeters

TOLERANCES ARE: *

DECIMALS:
X ±0.5
.X ±0.1
.XX ±0.05

ANGLES: ±0.5°

MACHINED: 63

* unless otherwise noted

MATERIAL

SCALE 1.000

APPROVALS	DATE
DRAWN	
CHECKED	
ENGINEER	

NATIONAL HIGHWAY TRAFFIC SAFETY ADMINISTRATION

UPPER NECK LOADCELL STRUCTURAL REPLACEMENT

SIZE	SHEET	DRAWING NUMBER	REV.
A3	1 OF 1	175-1010	A

REVISION RECORD			
REV.	DESCRIPTION	DATE	BY
A	NHTSA PART 572 NPRM RELEASE	7/30/04	DW

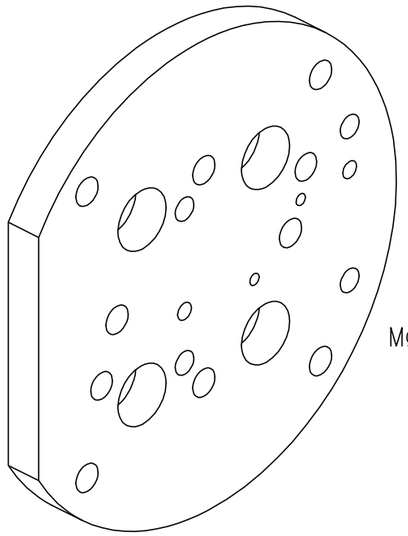

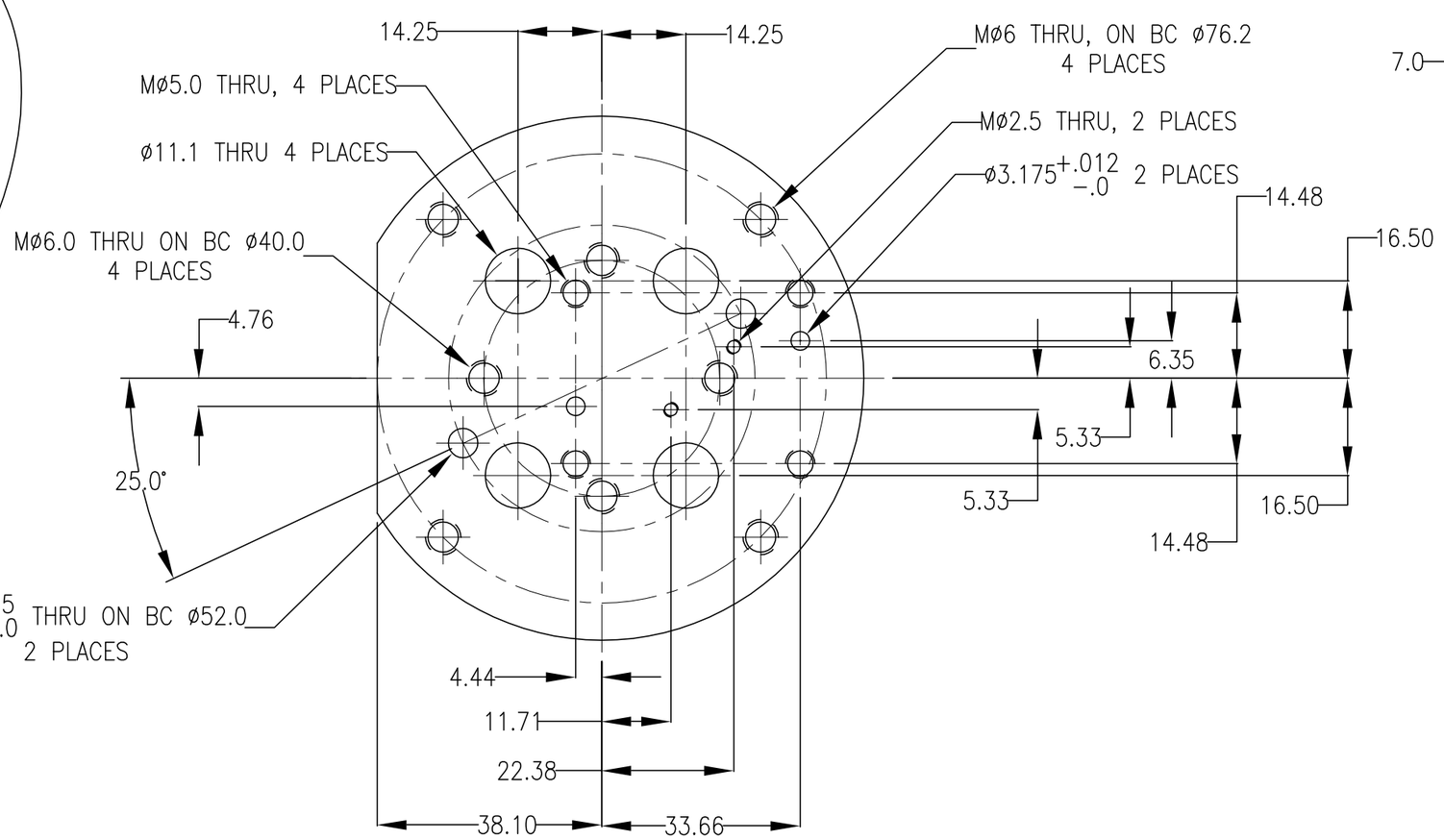

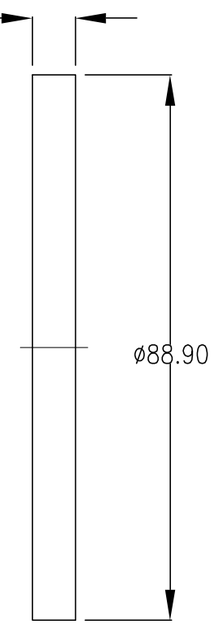

NOTES:

1. SURFACE FINISH SHALL NOT EXCEED 1.6 MICRONS.
2. REMOVE ALL BURRS AND SHARP EDGES.
3. FINISH: CHEMI–BLACK

ITEM NO.	QTY	PART NO.	DESCRIPTION

PART LIST

UNITS ARE millimeters

TOLERANCES ARE: *

DECIMALS:
X ±0.5
.X ±0.1
.XX ±0.05

ANGLES: ±0.5°

MACHINED: 63

* unless otherwise noted

MATERIAL: STEEL 080M40

SCALE: 1.000

APPROVALS	DATE
DRAWN	
CHECKED	
ENGINEER	

NATIONAL HIGHWAY TRAFFIC SAFETY ADMINISTRATION

TOP PLATE UNLC BLANK

SIZE	SHEET	DRAWING NUMBER	REV.
A3	1 OF 1	175–1011	A

REVISION RECORD			
REV.	DESCRIPTION	DATE	BY
A	NHTSA PART 572 NPRM RELEASE	7/30/04	DW

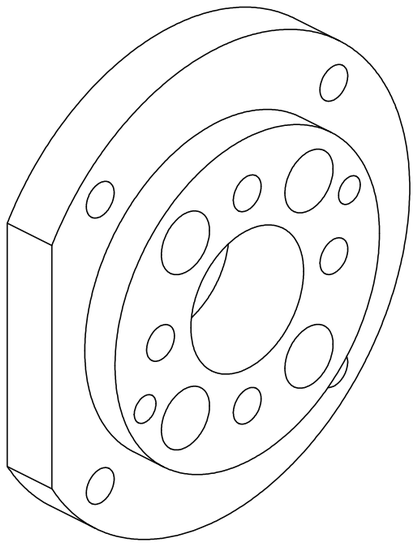

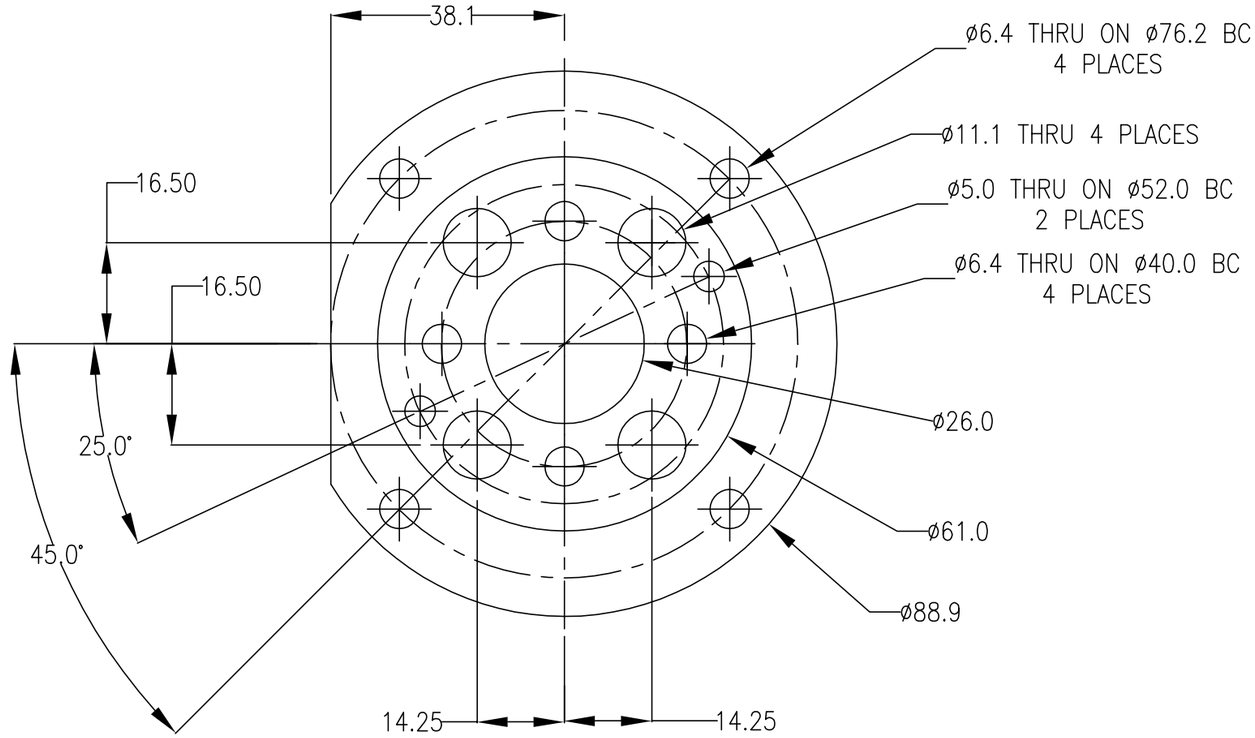

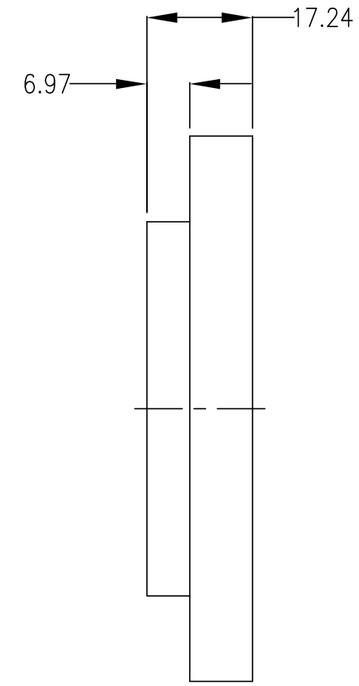

NOTES:

1. SURFACE FINISH SHALL NOT EXCEED 0.8 MICRONS.
2. REMOVE ALL BURRS AND SHARP EDGES.
3. FINISH: SILVER ANODIZE

ITEM NO.	QTY	PART NO.	DESCRIPTION

PART LIST

UNITS ARE millimeters

TOLERANCES ARE: *

DECIMALS:
X ±0.5
.X ±0.1
.XX ±0.05

ANGLES: ±0.5°

MACHINED: 63

* unless otherwise noted

MATERIAL	AL 6082
SCALE	1.000
APPROVALS	DATE
DRAWN	
CHECKED	
ENGINEER	

NATIONAL HIGHWAY TRAFFIC SAFETY ADMINISTRATION

MIDDLE PLATE UNLC BLANK

SIZE	SHEET	DRAWING NUMBER	REV.
A3	1 OF 1	175-1012	A

REVISION RECORD			
REV.	DESCRIPTION	DATE	BY
A	NHTSA PART 572 NPRM RELEASE	7/30/04	DW

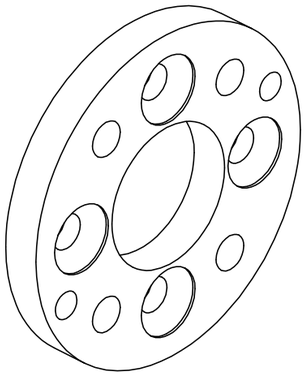

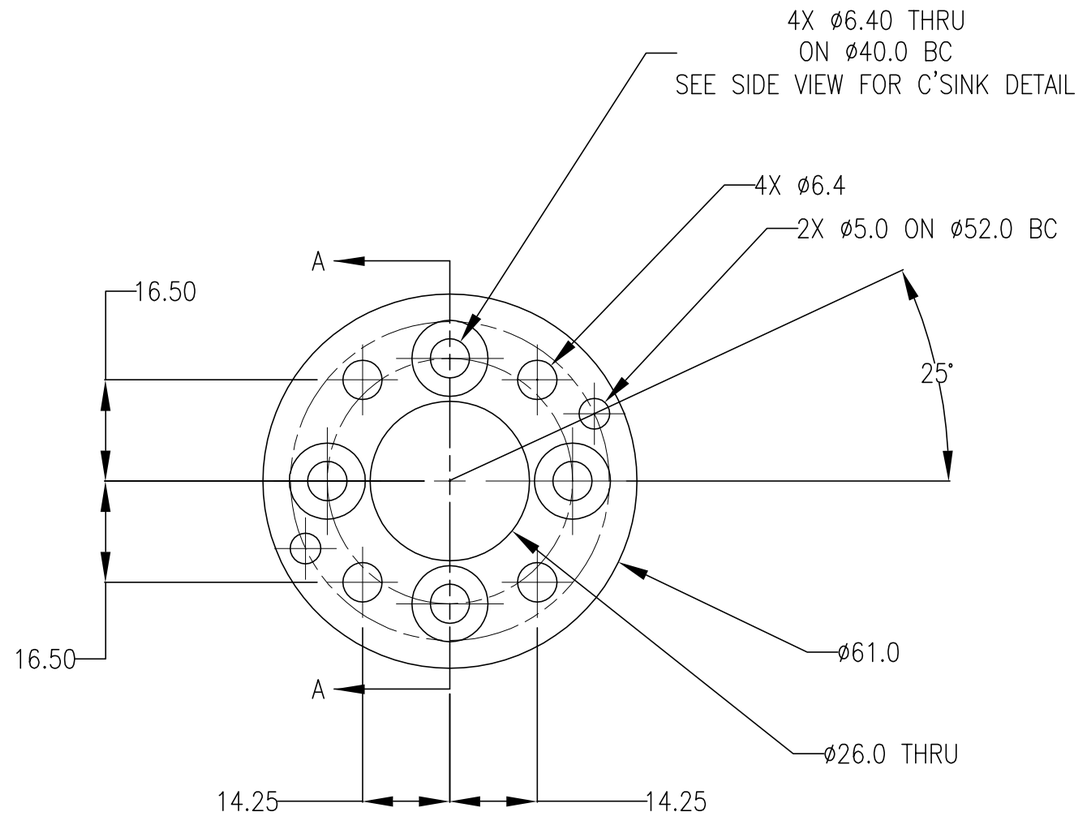

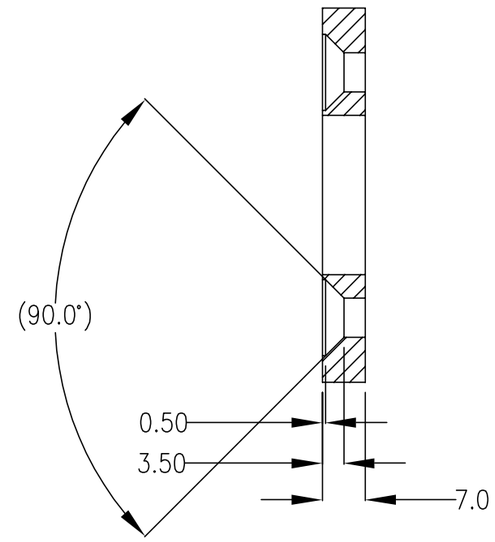

SECTION A–A

NOTE:

1. REMOVE ALL BURRS AND BREAK SHARP EDGES.
2. ALL SURFACE FINISH SHALL BE 0.8
3. FINISH: CHEMI–BLACK

ITEM NO.	QTY	PART NO.	DESCRIPTION

PART LIST

UNITS ARE millimeters

TOLERANCES ARE: *

DECIMALS:
X ±0.5
.X ±0.1
.XX ±0.05

ANGLES: ±0.5°

MACHINED: 63

* unless otherwise noted

MATERIAL	080M40 STEEL	
SCALE	1.000	
APPROVALS		DATE
DRAWN		
CHECKED		
ENGINEER		

NATIONAL HIGHWAY TRAFFIC SAFETY ADMINISTRATION

BOTTOM PLATE UNLC BLANK

SIZE	SHEET	DRAWING NUMBER	REV.
A3	1 OF 1	175–1013	A

REVISION RECORD			
REV	DESCRIPTION	DATE	BY

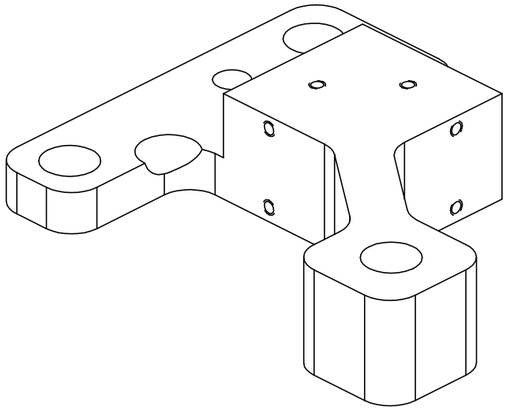

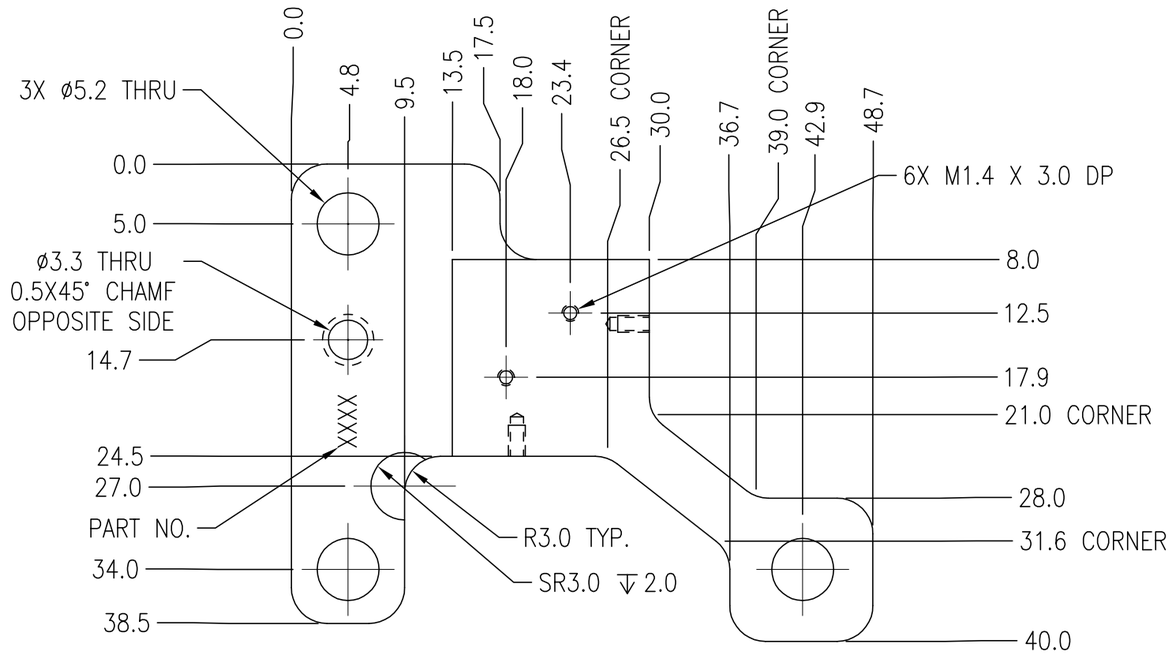

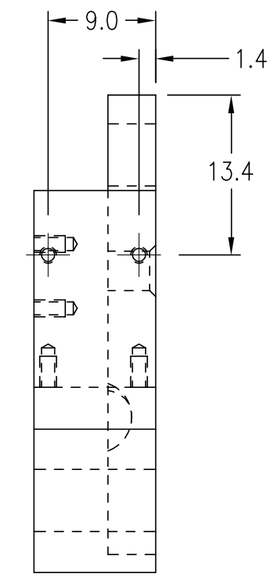

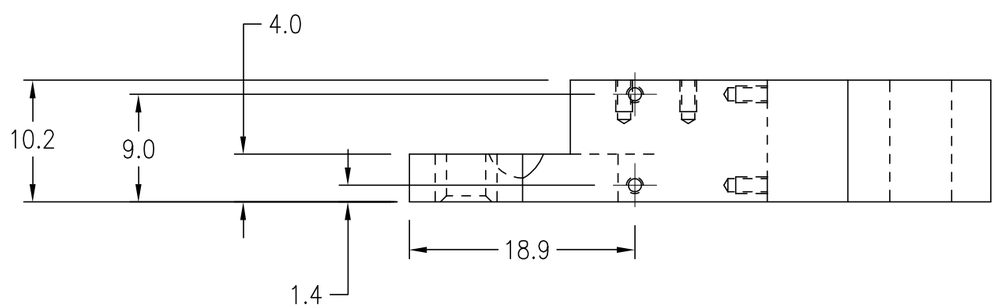

NOTES:
1. REMOVE ALL BURRS AND BREAK SHARP EDGES.
2. STAMP OR ETCH PART NUMBER WHERE SHOWN.
3. FINISH: GOLD ANODIZE.

UNITS ARE mm

TOLERANCES ARE: *

DECIMALS	ANGLES
X ±0.5	± 0.5°
X.X ±0.1	MACHINED:
X.XX ±0.05	63

* unless otherwise noted

MATERIAL: AL 7075-T6	
SCALE 2 = 1	
APPROVALS	DATE
DRAWN D. Walker	4/30/04
CHECKED	
ENG	

NATIONAL HIGHWAY TRAFFIC SAFETY ADMINISTRATION

ACCELEROMETER MOUNT, HEAD C.G.

EUROSID 2

SIZE	DRAWING NUMBER	REV
B	SA572-S81	

REVISION RECORD			
ITEM NO.	BY	DATE	DESCRIPTION
–A–	HP	01/09/99	TOLERANCES
–B1–	DW	09/27/99	UPDATED NOTE
–B2–			CHANGE TRANSVERSE SENSITIVITY TO 1%
–B3–			REVISED FORMAT, ENLARGED TOLERANCES
–C1–	DW	02/8/00	REVISED TOLERANCE
–D1–	DW	08/15/01	CHANGED SINGLE DECIMAL PLACE TOLERANCE FROM ± 0.1/2.54 TO ± 0.1/2.5
–D2–	DW		CORRECTED METRIC EQUIVALENTS
–D3–	DW		ADDED DIMENSIONS

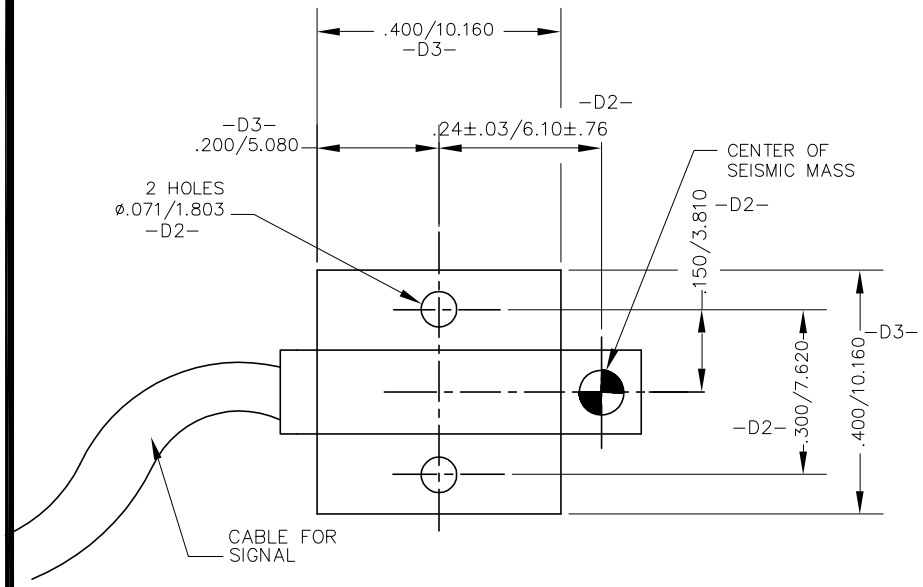

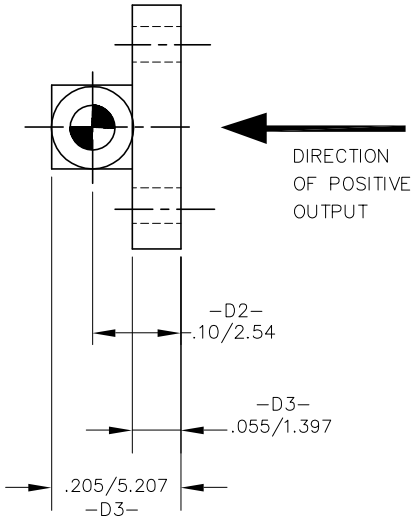

SPECIFICATIONS

RANGE	±2000 g
SENSITIVITY	.20 mV/g MIN
MOUNTED RESONANCE FREQUENCY	22,000 Hz MIN

–B1– SIGNAL OUTPUT MUST BE COMPATIBLE WITH AND RECORDABLE IN A DATA CHANNEL AS DEFINED BY SAE J211

DAMPING RATIO	UNDAMPED (.005)
–B2– TRANSVERSE SENSITIVITY	±1% MAX
NON–LINEARITY & HYSTERESIS	±2% MAX
ZERO OFFSET	±25 mV
EXCITATION	10V DC
THERMAL SENSITIVITY	–5% Typ AT 0°F TO 150°F
TEMPERATURE EXPOSURE LIMITS	0°/+200°F WITHOUT DAMAGE
WEIGHT	1 gram (WITHOUT CABLE)
HUMIDITY	SEALED

RELEASED

AUG. 15 2001

NHTSA

UNITS ARE in/mm

–D1–
–C1–
–B3–

TOLERANCES ARE: *

DECIMALS		ANGLES
.X	±0.1/2.5	+ 0.5°
.XX	±0.01/.25	
.XXX	±0.005/.127	

** unless otherwise noted*

MATERIAL:	
SCALE NONE	
APPROVALS	DATE
DRAWN CTE	3/5/98
CHECKED	
ENG J McF H.P.	

NATIONAL HIGHWAY TRAFFIC SAFETY ADMINISTRATION

UNIAXIAL PIEZORESISTIVE ACCELEROMETER

HYBRID III DUMMY FAMILY

SIZE	DRAWING NUMBER	REV
A	SA572–S4	D

REVISION RECORD			
REV.	DESCRIPTION	DATE	BY
A	NHTSA PART 572 NPRM RELEASE	7/30/04	DMW

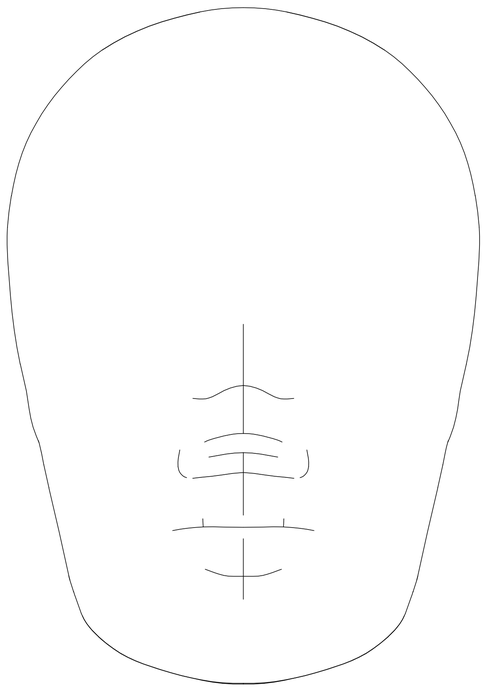

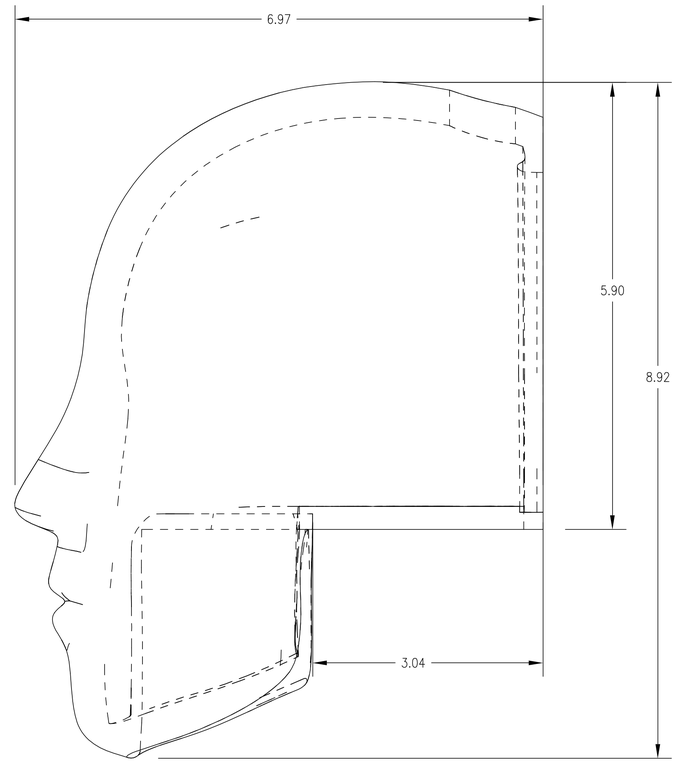

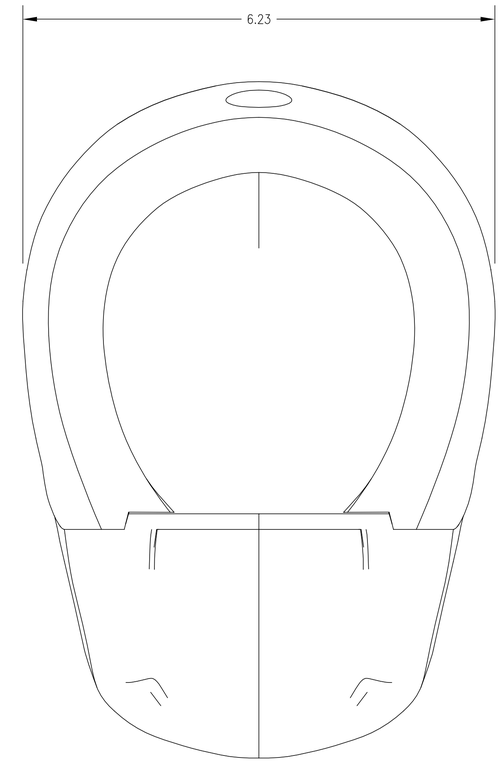

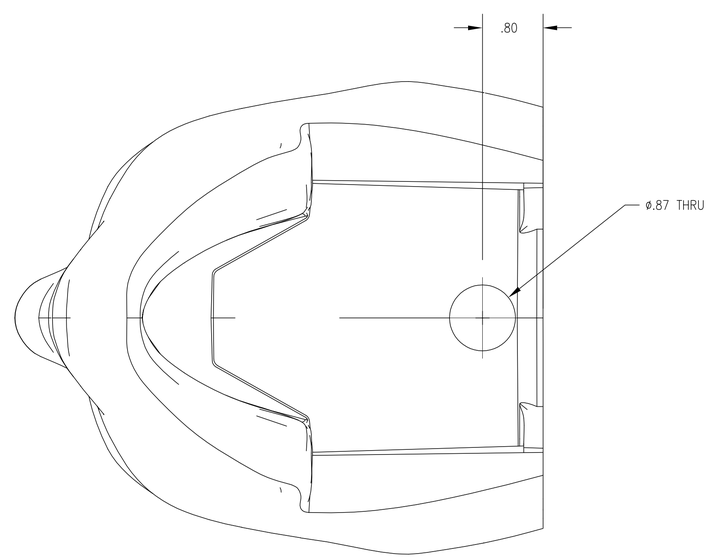

NOTES:

1. MATERIAL: VINYL 30–50 SHORE A
2. TESTED AND CERTIFIED TO THE LATEST EUROSID–2 STANDARD
3. UNLESS OTHERWISE SPECIFIED, APPLY ±.25 TOLERANCE TO ALL DIMENSIONS.

ITEM NO.	QTY	FSCM NO.	PART NO.	DESCRIPTION

PART LIST

UNITS ARE inches

TOLERANCES ARE: *

DECIMALS:
.X ±0.1
.XX ±0.01
.XXX ±0.005
FRACTIONS ±1/64

ANGLES: ±0.5°

MACHINED: 63

* unless otherwise noted

MATERIAL: SEE NOTES

SCALE: 1.000

APPROVALS	DATE
DRAWN	
CHECKED	
ENGINEER	

NATIONAL HIGHWAY TRAFFIC SAFETY ADMINISTRATION

HEAD SKIN

SIZE	SHEET	DRAWING NUMBER	REV.
D	1 OF 1	175–1005	A

REVISION RECORD			
REV.	DESCRIPTION	DATE	BY
A	NHTSA PART 572 NPRM RELEASE	7/30/04	DW

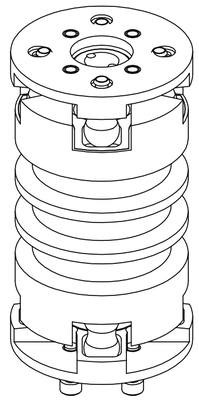

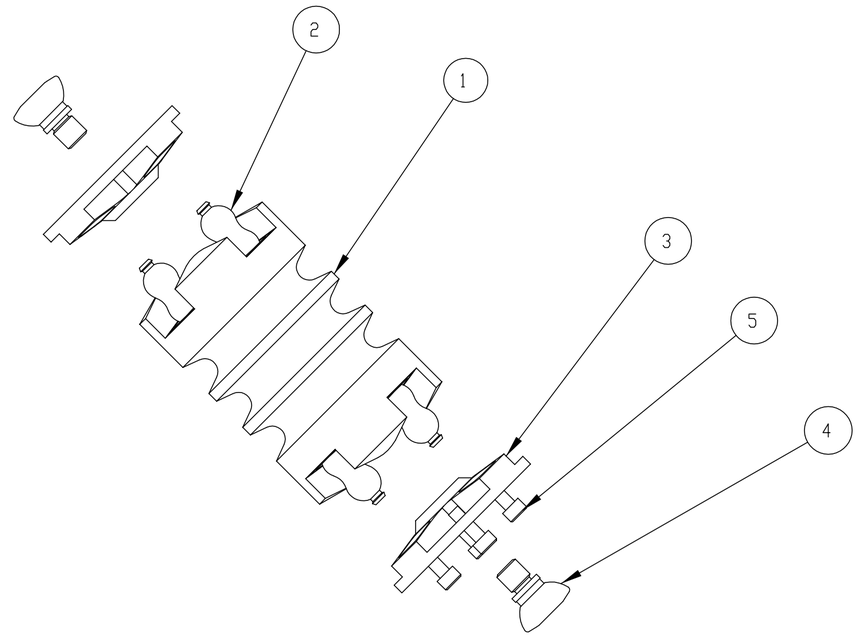

NOTES:

1. FOR NECK COMPRESSION USE TOOL 175–9500.
2. BUFFER HARDNESS, RED, YELLOW OR BLUE IS SELECTED ON CERTIFICATION 8 OF EACH BUFFER IS SUPPLIED (24 TOTAL) 16 WILL BE LOOSE PARTS.
3. FOR ASSEMBLY INSTRUCTIONS SEE EUROSID II MANUAL.

ITEM NO.	QTY	PART NO.	DESCRIPTION
7	1	175–2020	NECK BUFFER ASS'Y SET 80 SHORE A BLUE (NOT SHOWN)
6	1	175–2015	NECK BUFFER ASS'Y SET 70 SHORE A YELLOW (NOT SHOWN)
5	4	5000285	SCREW, SHCS M6 X 18
4	2	175–2004	HALF SPHERICAL SCREW
3	2	175–2003	PLATE, NECK HEAD & TORSO INTERFACE
2	1	175–2010	NECK BUFFER ASS'Y SET 60 SHORE A RED
1	1	175–2001	NECK, MOLDED

PART LIST

UNITS ARE millimeters

TOLERANCES ARE: *

DECIMALS:
X ±0.5
.X ±0.1
.XX ±0.05

ANGLES: ±0.5°

MACHINED: 63

* unless otherwise noted

MATERIAL

SCALE 0.500

APPROVALS	DATE
DRAWN	
CHECKED	
ENGINEER	

NATIONAL HIGHWAY TRAFFIC SAFETY ADMINISTRATION

NECK ASSEMBLY TEST/CERT

SIZE	SHEET	DRAWING NUMBER	REV.
A2	1 OF 1	175–2000	A

REVISION RECORD			
REV.	DESCRIPTION	DATE	BY
A	NHTSA PART 575 NPRM RELEASE	7/30/04	DW

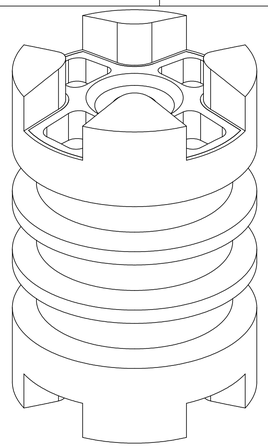

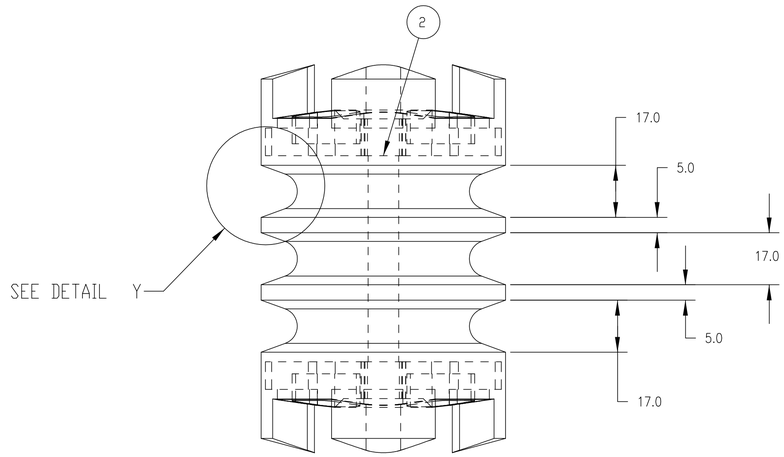

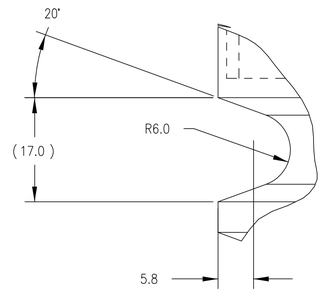

DETAIL Y
SCALE 2.00

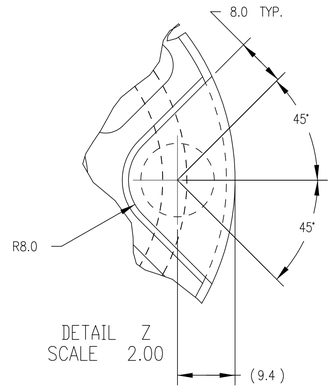

DETAIL Z
SCALE 2.00

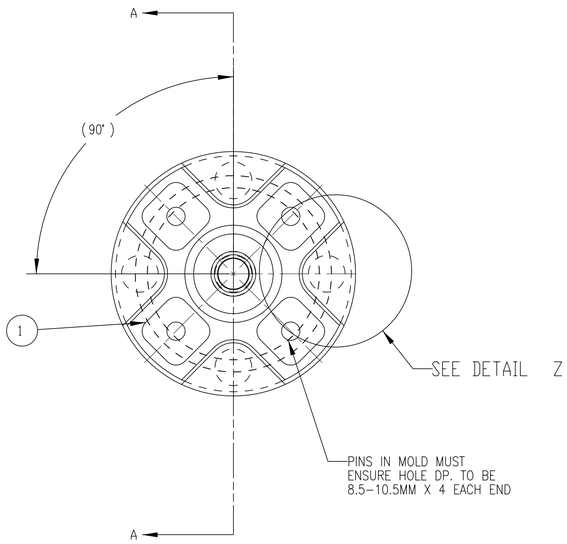

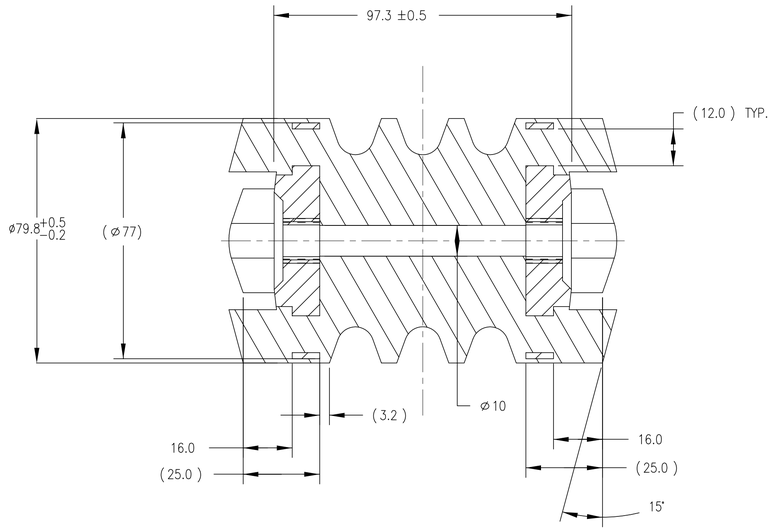

SECTION A-A

NOTES:

1. BEAD BLAST ITEM #1 BEFORE MOLDING.
2. HARDNESS MAY VARY IN ACCORDANCE WITH PERFORMANCE REQUIREMENT, RECOMMENDED GUIDE 72–76 IRHD.
3. NO SPLITS OR DEFECTS ARE ALLOWED IN RUBBER MOLDING.
4. CLEAR POCKETS AND THREADS OF ALL RUBBER AND BEAD BLAST ASSEMBLY AFTER MOLDING.
5. ALL UNTOLERANCED DIMENSIONS ±1mm.

ITEM NO.	QTY	PART NO.	DESCRIPTION
2	2	5000107	HELICOIL, M12 X 1.25 X 12
1	2	175–2002	NECK INTERMEDIATE PLATE

PART LIST

UNITS ARE millimeters

TOLERANCES ARE: *
DECIMALS: X ±0.5, .X ±0.1, .XX ±0.05
ANGLES: ±0.5°
MACHINED: 63
* unless otherwise noted

MATERIAL: BLACK NITRILE RUBBER
SCALE: 1.000

APPROVALS	DATE
DRAWN	
CHECKED	
ENGINEER	

NATIONAL HIGHWAY TRAFFIC SAFETY ADMINISTRATION

NECK, MOLDED

SIZE: A1 | SHEET: 1 OF 1 | DRAWING NUMBER: 175–2001 | REV.: A

REVISION RECORD			
REV.	DESCRIPTION	DATE	BY
A	NHTSA PART 572 NPRM RELEASE	7/30/04	DW

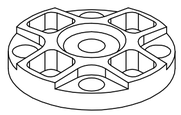

SCALE 0.500

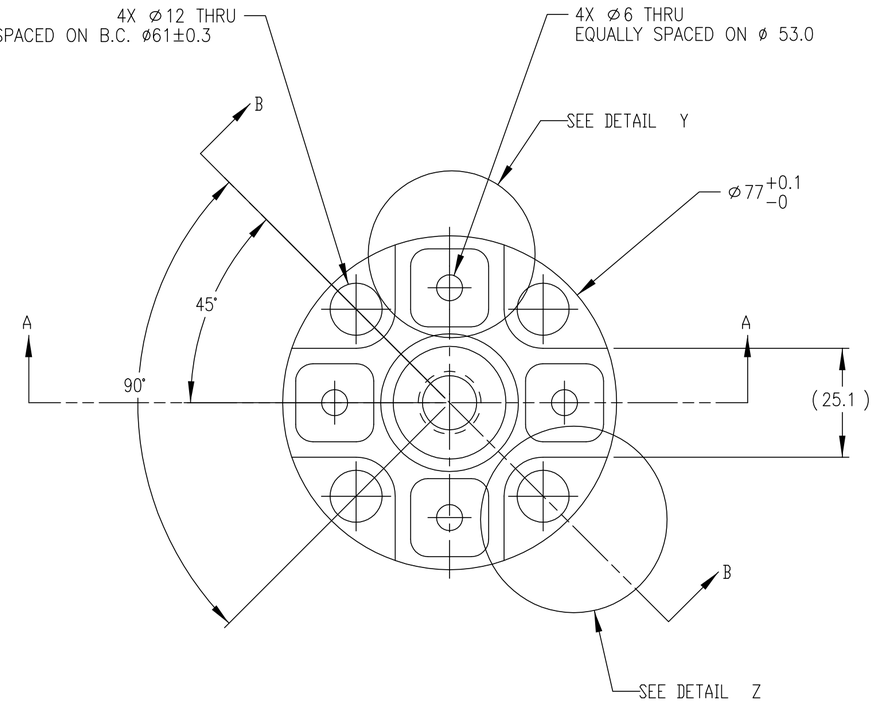

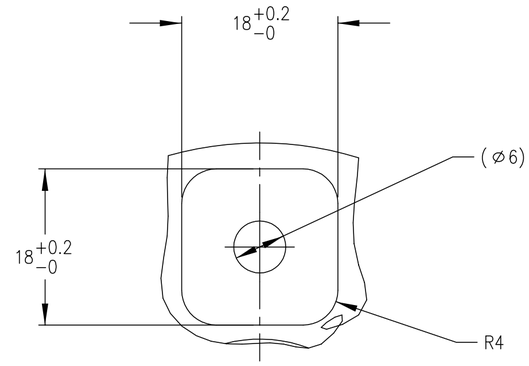

DETAIL Y
SCALE 2.00

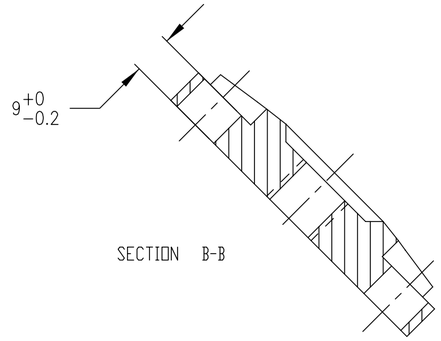

SECTION B-B

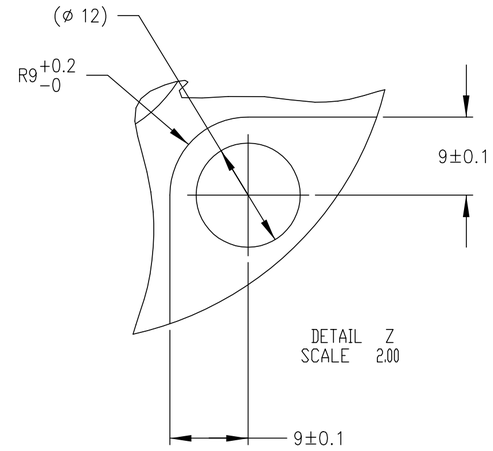

DETAIL Z
SCALE 2.00

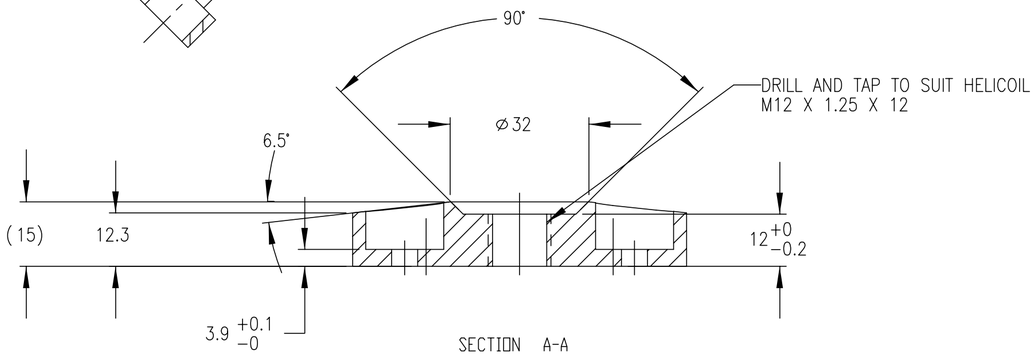

SECTION A-A

NOTES:

1. REMOVE ALL BURRS AND BREAK SHARP EDGES.
2. THREAD TO CONFORM TO BS3643 & MUST BE CLEAR & FREE RUNNING.

ITEM NO.	QTY	PART NO.	DESCRIPTION

PART LIST

UNITS ARE millimeters

TOLERANCES ARE: *

DECIMALS:
X ±0.5
.X ±0.1
.XX ±0.05

ANGLES: ±0.5°

MACHINED: 63

* unless otherwise noted

MATERIAL: 6082 (HE30) ALUMINUM

SCALE: 1.000

APPROVALS	DATE
DRAWN	
CHECKED	
ENGINEER	

NATIONAL HIGHWAY TRAFFIC SAFETY ADMINISTRATION

NECK INTERMEDIATE PLATE

SIZE	SHEET	DRAWING NUMBER	REV.
A2	1 OF 1	175-2002	A

REVISION RECORD			
REV.	DESCRIPTION	DATE	BY
A	NHTSA PART 572 NPRM RELEASE	7/30/04	DW

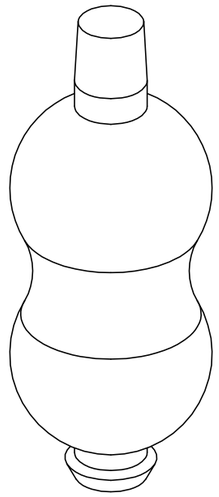

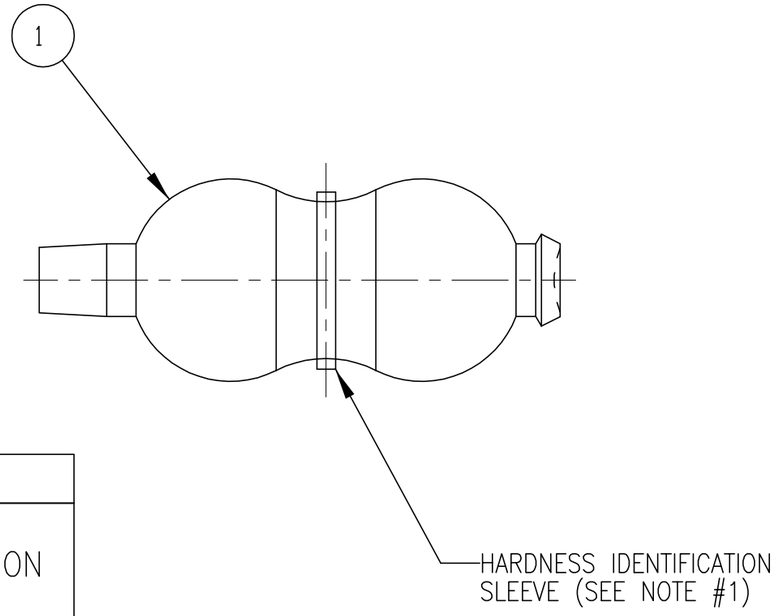

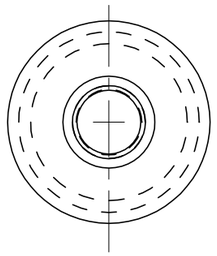

TABLE 1	
SHORE HARDNESS ±2	COLOR IDENTIFICATION
60 SHORE A	RED

NOTES:

1. FOR HARDNESS IDENTIFICATION USE COLORED HEAT SHRINK SLEEVING SHRUNK OVER RUBBER BUFFER IN POSITION SHOWN. (SEE TABLE 1 FOR COLOR KEY)

2. PART NUMBER 175–2010 REPRESENTS A SET. ONE SET CONTAINS 8 NECK BUFFERS.

ITEM NO.	QTY	PART NO.	DESCRIPTION
1	8	175–2010–1	NECK BUFFER MOLDED 60 SHORE A

PART LIST

UNITS ARE millimeters

TOLERANCES ARE: *

DECIMALS:
X ±0.5
.X ±0.1
.XX ±0.05

ANGLES: ±0.5°

MACHINED: 63

* unless otherwise noted

MATERIAL

SCALE 2.000

APPROVALS	DATE
DRAWN	
CHECKED	
ENGINEER	

NATIONAL HIGHWAY TRAFFIC SAFETY ADMINISTRATION

NECK BUFFER ASS'Y SET
60 SHORE A RED

SIZE	SHEET	DRAWING NUMBER	REV.
A3	1 OF 1	175–2010	A

REVISION RECORD			
REV.	DESCRIPTION	DATE	BY
A	NHTSA PART 572 NPRM RELEASE	7/30/04	DW

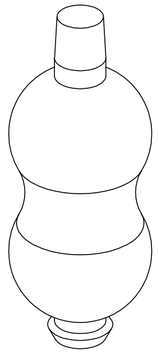

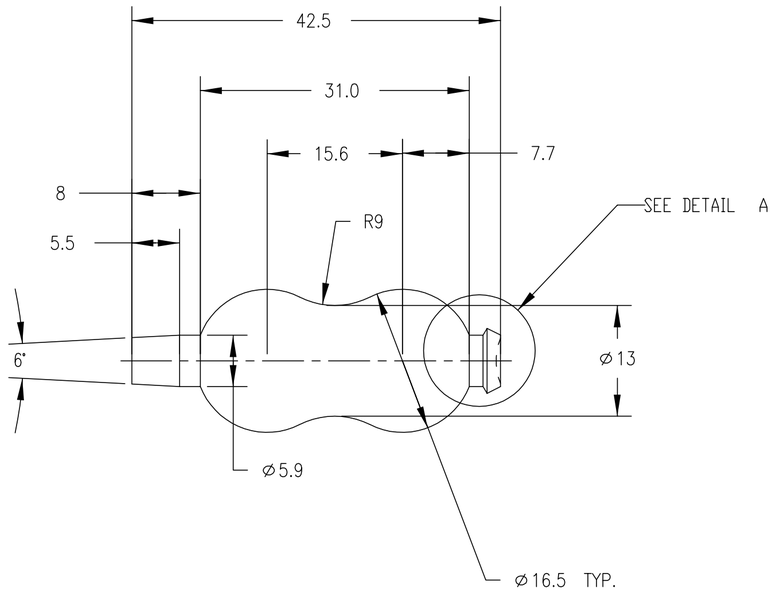

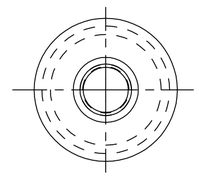

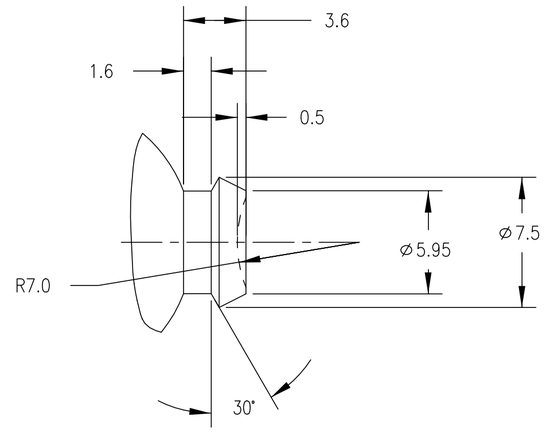

DETAIL A
SCALE 4.00

NOTES:

1. MATERIAL: BLACK NATURAL RUBBER
   DUROMETER 60 SHORE A ±2.

2. TOLERANCE OF ±1 MM APPLIED TO ALL DIMENSIONS.

ITEM NO.	QTY	PART NO.	DESCRIPTION

PART LIST

UNITS ARE millimeters

TOLERANCES ARE: *

DECIMALS:
X ±0.5
.X ±0.1
.XX ±0.05

ANGLES: ±0.5°

MACHINED: 63

* unless otherwise noted

MATERIAL: BLACK NATURAL RUBBER

SCALE: 2.000

APPROVALS	DATE
DRAWN	
CHECKED	
ENGINEER	

NATIONAL HIGHWAY TRAFFIC SAFETY ADMINISTRATION

NECK BUFFER MOLDED 60 SHORE A

SIZE	SHEET	DRAWING NUMBER	REV.
A2	1 OF 1	175-2010-1	A

REVISION RECORD			
REV.	DESCRIPTION	DATE	BY
A	NHTSA PART 572 NPRM RELEASE	7/30/04	DW

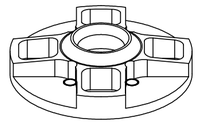

SCALE 0.500

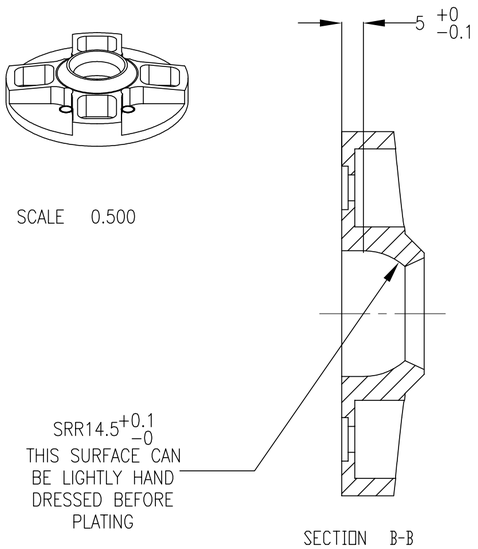

SECTION B-B

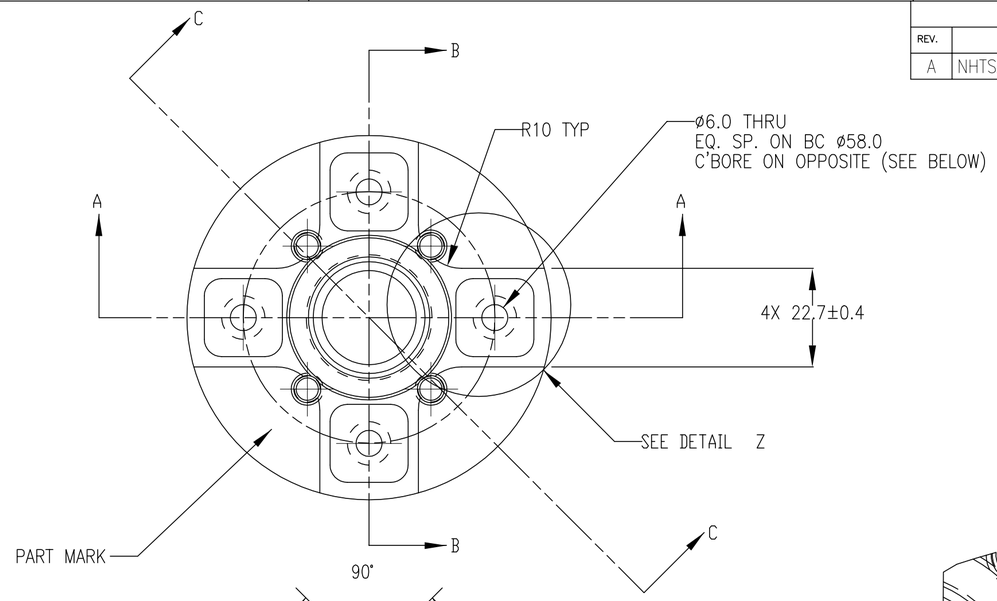

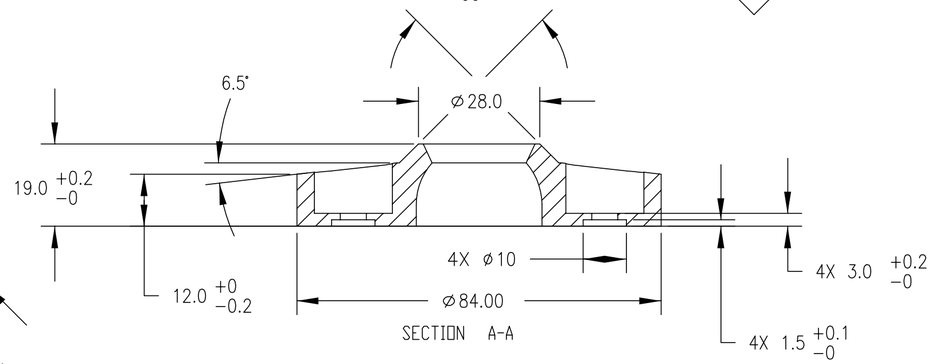

SECTION A-A

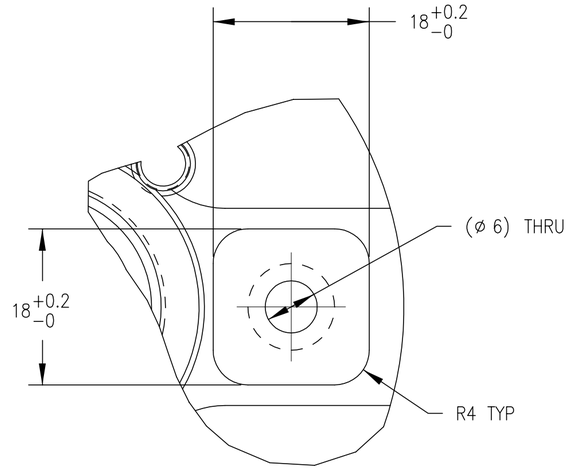

DETAIL Z
SCALE 2.00

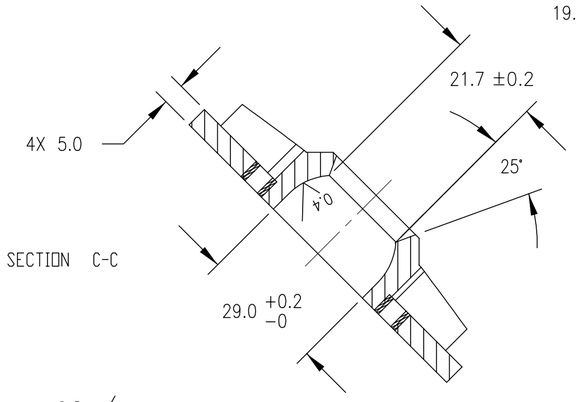

SECTION C-C

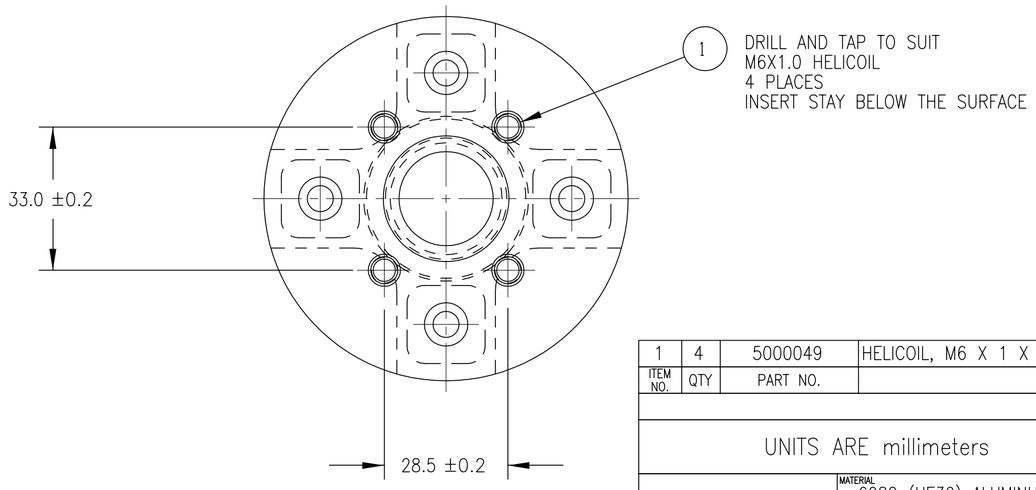

NOTES:

1. SURFACE FINISH TO BE 0.8 OR BETTER ALL OVER UNLESS OTHERWISE STATED.
2. REMOVE ALL BURRS AND BREAK SHARP EDGES PRIOR TO ANODISING.
3. THREAD TO CONFORM TO BS3643 & MUST BE CLEAR & FREE RUNNING.
4. SILVER ANODISE TO BS1615, AA10, HOT WATER SEAL.
5. PART MARK WITH INDELIBLE PEN '175-2003' FOLLOWED BY SERIAL NO. WHERE SHOWN.
6. STRAIGHT GRAIN TOP 4 CORNERS RECESS 0.8

ITEM NO.	QTY	PART NO.	DESCRIPTION
1	4	5000049	HELICOIL, M6 X 1 X 6

PART LIST

UNITS ARE millimeters

TOLERANCES ARE: *

DECIMALS:
X ±0.5
.X ±0.1
.XX ±0.05

ANGLES: ±0.5°

MACHINED: 63

* unless otherwise noted

MATERIAL: 6082 (HE30) ALUMINUM

SCALE: 1.000

APPROVALS	DATE
DRAWN	
CHECKED	
ENGINEER	

NATIONAL HIGHWAY TRAFFIC SAFETY ADMINISTRATION

PLATE, NECK HEAD & TORSO INTERFACE

SIZE	SHEET	DRAWING NUMBER	REV.
A2	1 OF 1	175-2003	A

REVISION RECORD			
REV.	DESCRIPTION	DATE	BY
A	NHTSA PART 572 NPRM RELEASE	7/30/04	DW

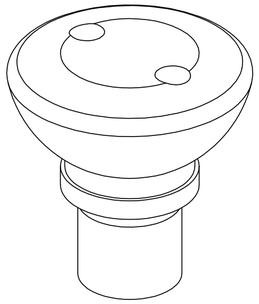

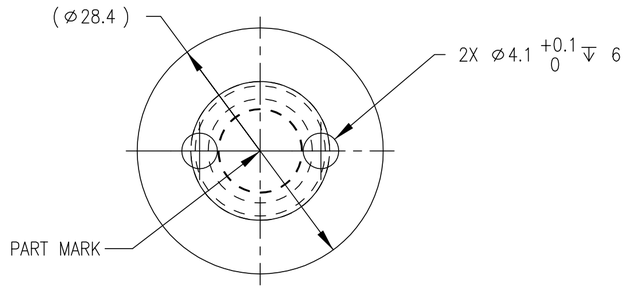

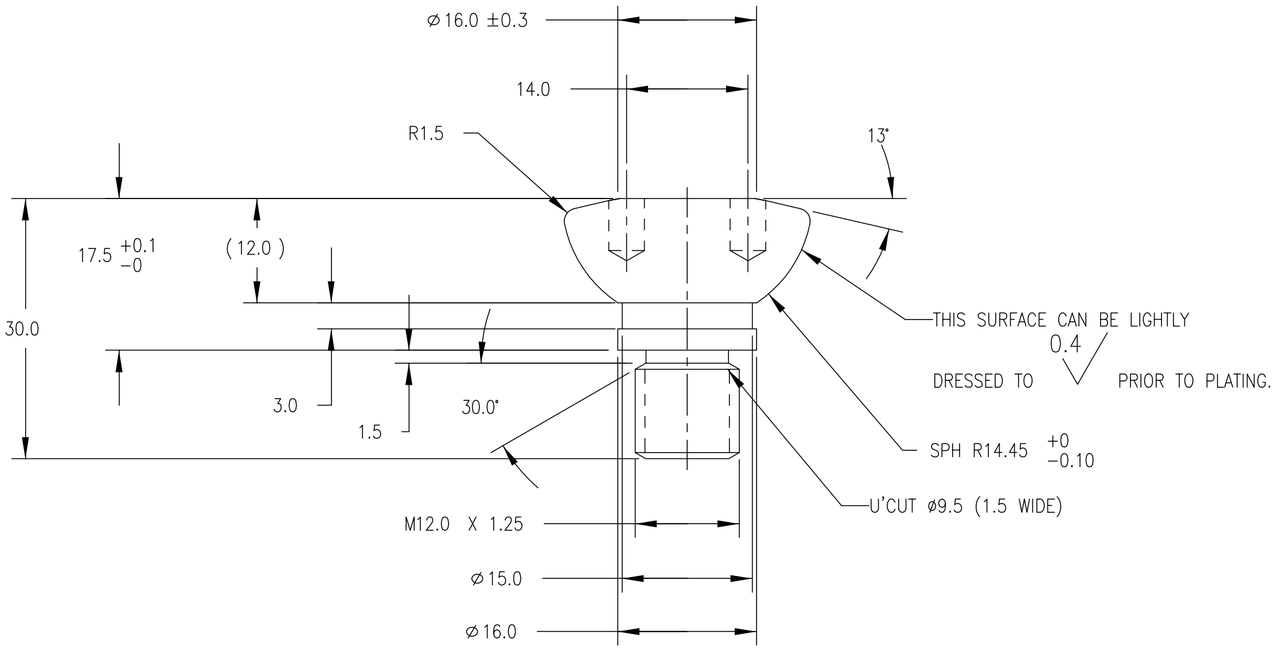

NOTES:

1. REMOVE ALL BURRS AND BREAK SHARP EDGES PRIOR TO PLATING.
2. THREAD TO CONFORM TO BS3643.
3. ZINC PLATE AND COLOR PASSIVE PLATE THICKNESS 5 TO 8 MICRONS.
4. VIBRO ETCH CODE '175–2004' FOLLOWED BY SERIAL NO. WHERE SHOWN.

ITEM NO.	QTY	PART NO.	DESCRIPTION

PART LIST

UNITS ARE millimeters

TOLERANCES ARE: *

DECIMALS:
X ±0.5
.X ±0.1
.XX ±0.05

ANGLES: ±0.5°

MACHINED: 63

* unless otherwise noted

MATERIAL: 080M40 STEEL (EN8)

SCALE: 2.000

APPROVALS	DATE
DRAWN	
CHECKED	
ENGINEER	

NATIONAL HIGHWAY TRAFFIC SAFETY ADMINISTRATION

HALF SPHERICAL SCREW

SIZE	SHEET	DRAWING NUMBER	REV.
A2	1 OF 1	175–2004	A

REVISION RECORD			
REV.	DESCRIPTION	DATE	BY
A	NHTSA PART 572 NPRM RELEASE	7/30/04	DW

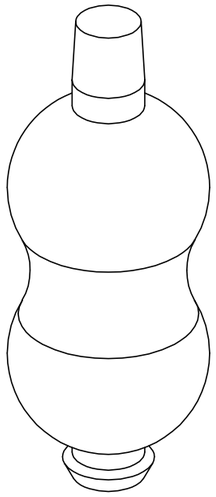

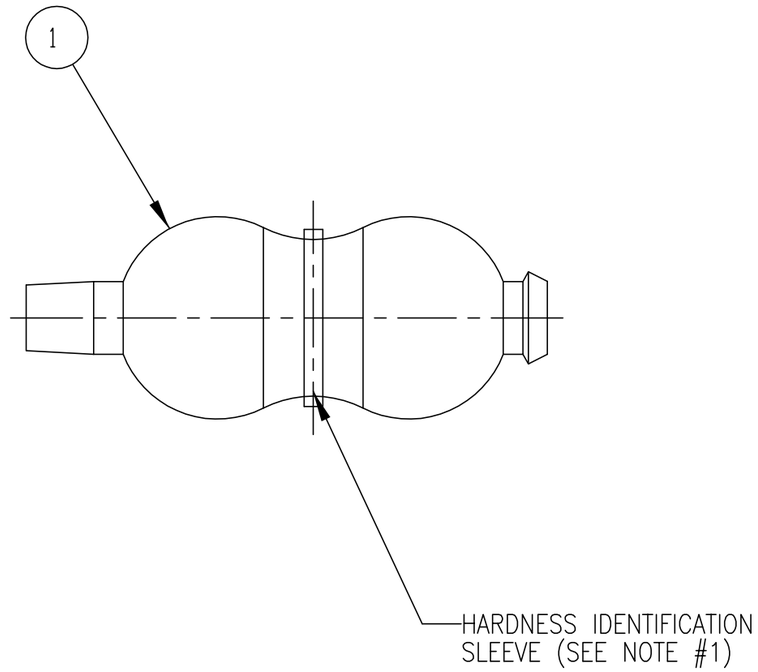

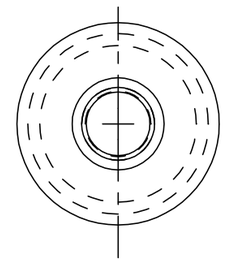

TABLE 1	
SHORE HARDNESS ±2	COLOR IDENTIFICATION
70 SHORE	YELLOW

NOTES:

1. FOR HARDNESS IDENTIFICATION USE COLORED HEAT SHRINK SLEEVING SHRUNK OVER RUBBER IN POSITION SHOWN. (SEE TABLE 1 FOR COLOR KEY)

2. PART NUMBER 175-2015 REPRESENTS A SET. ONE SET CONTAINS 8 NECK BUFFERS.

ITEM NO.	QTY	PART NO.	DESCRIPTION
1	8	175-2015-1	NECK BUFFER MOLDED 70 SHORE A

PART LIST

UNITS ARE millimeters

TOLERANCES ARE: *

DECIMALS:
X ±0.5
.X ±0.1
.XX ±0.05

ANGLES: ±0.5°

MACHINED: 63

* unless otherwise noted

MATERIAL

SCALE 2.000

APPROVALS	DATE
DRAWN	
CHECKED	
ENGINEER	

NATIONAL HIGHWAY TRAFFIC SAFETY ADMINISTRATION

NECK BUFFER ASS'Y SET
70 SHORE A YELLOW

SIZE	SHEET	DRAWING NUMBER	REV.
A3	1 OF 1	175-2015	A

REVISION RECORD			
REV.	DESCRIPTION	DATE	BY
A	NHTSA PART 572 NPRM RELEASE	7/30/04	DW

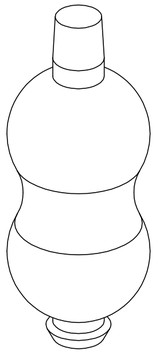

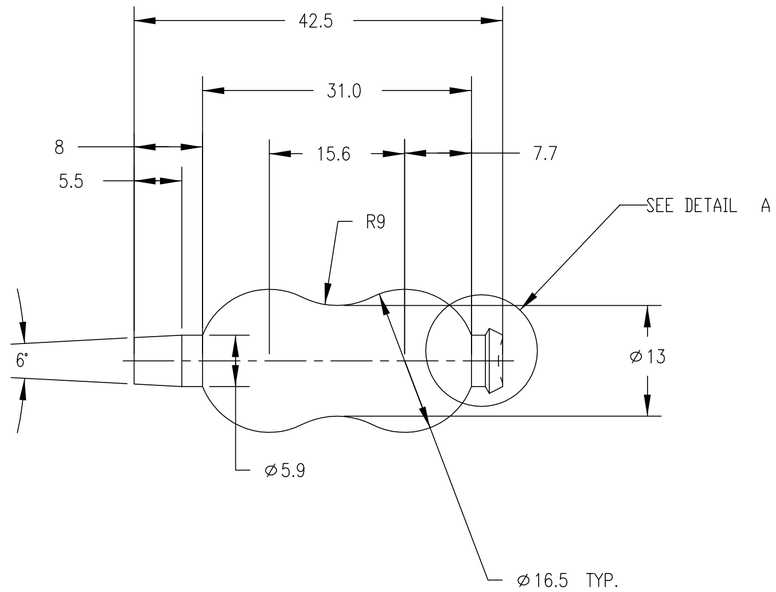

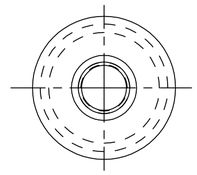

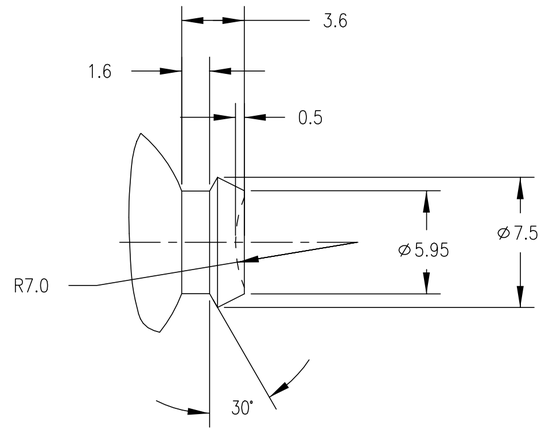

DETAIL A
SCALE 4.00

NOTES:

1. MATERIAL: BLACK NATURAL RUBBER
   DUROMETER 70 SHORE A ±2.
2. TOLERANCE OF ±1 MM APPLIED TO ALL DIMENSIONS.

ITEM NO.	QTY	PART NO.	DESCRIPTION

PART LIST

UNITS ARE millimeters

TOLERANCES ARE: *

DECIMALS:
X ±0.5
.X ±0.1
.XX ±0.05

ANGLES: ±0.5°

MACHINED: 63

* unless otherwise noted

MATERIAL: BLACK NATURAL RUBBER

SCALE: 2.000

APPROVALS	DATE
DRAWN	
CHECKED	
ENGINEER	

NATIONAL HIGHWAY TRAFFIC SAFETY ADMINISTRATION

NECK BUFFER MOLDED 70 SHORE A

SIZE	SHEET	DRAWING NUMBER	REV.
A2	1 OF 1	175-2015-1	A

REVISION RECORD			
REV.	DESCRIPTION	DATE	BY
A	NHTSA PART 572 NPRM RELEASE	7/30/04	DW

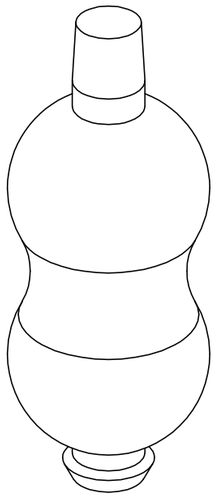

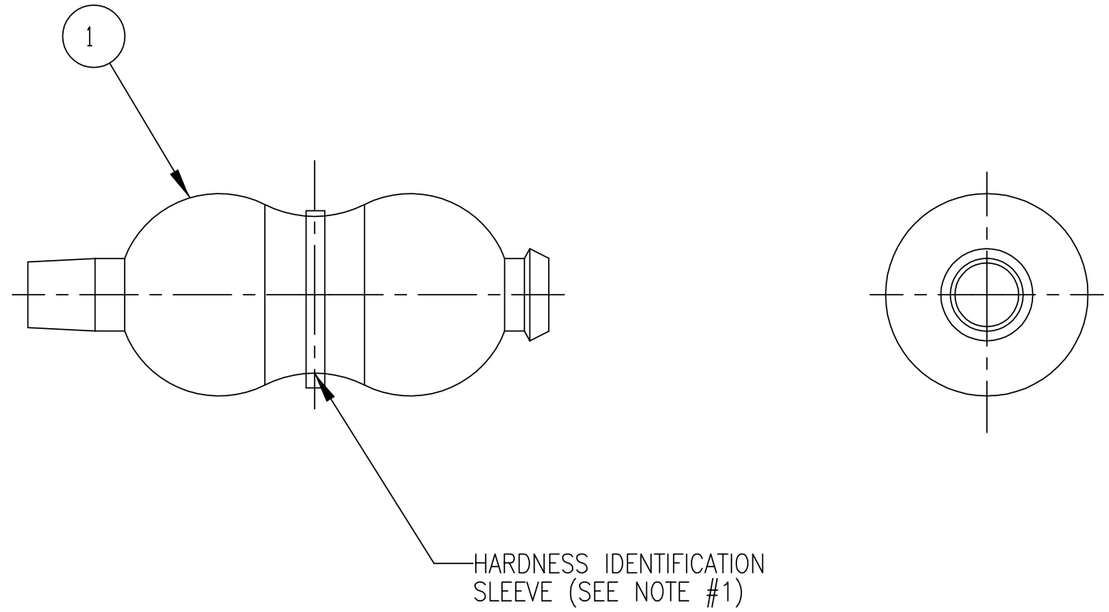

TABLE 1	
SHORE HARDNESS ±2	COLOR IDENTIFICATION
80 SHORE A	BLUE

NOTES:

1. FOR HARDNESS IDENTIFICATION USE COLORED HEAT SHRINK SLEEVING SHRUNK OVER RUBBER BUFFER IN POSITION SHOWN. (SEE TABLE 1 FOR COLOR KEY)

2. PART NUMBER 175-2020 REPRESENTS A SET. ONE SET CONTAINS 8 NECK BUFFERS.

ITEM NO.	QTY	PART NO.	DESCRIPTION
1	8	175-2020-1	NECK BUFFER MOLDED 80 SHORE A

PART LIST

UNITS ARE millimeters

TOLERANCES ARE: *

DECIMALS:
X ±0.5
.X ±0.1
.XX ±0.05

ANGLES: ±0.5°

MACHINED: 63

* unless otherwise noted

MATERIAL

SCALE 2.000

APPROVALS	DATE
DRAWN	
CHECKED	
ENGINEER	

NATIONAL HIGHWAY TRAFFIC SAFETY ADMINISTRATION

NECK BUFFER ASS'Y SET 80 SHORE A BLUE

SIZE	SHEET	DRAWING NUMBER	REV.
A3	1 OF 1	175-2020	A

REVISION RECORD			
REV.	DESCRIPTION	DATE	BY
A	NHTSA PART 572 NPRM RELEASE	7/30/04	DW

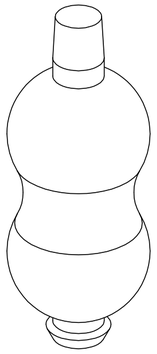

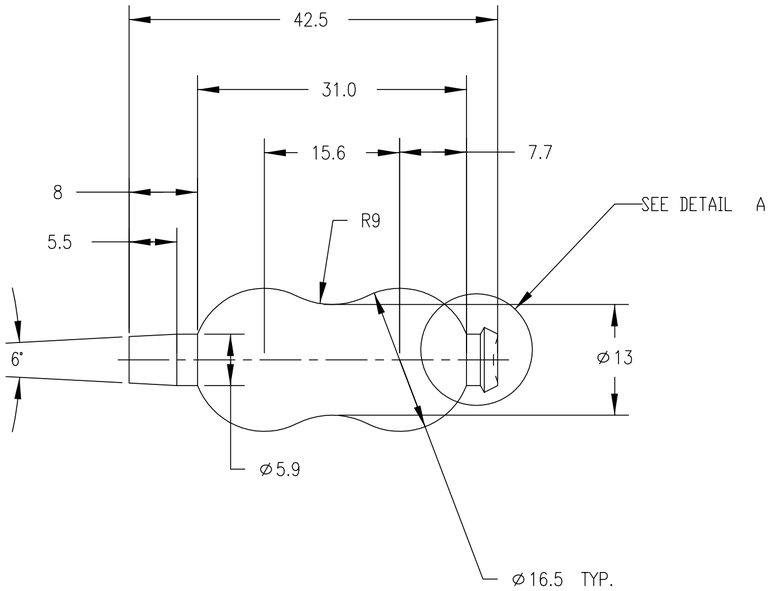

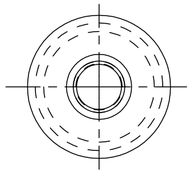

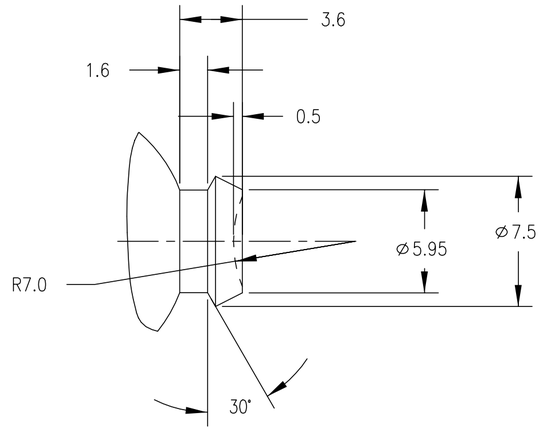

DETAIL A
SCALE 4.00

NOTES:

1. MATERIAL: BLACK NATURAL RUBBER
   DUROMETER 80 SHORE A ±2.
2. TOLERANCE OF ±1 MM APPLIED TO ALL DIMENSIONS.

ITEM NO.	QTY	PART NO.	DESCRIPTION

PART LIST

UNITS ARE millimeters

TOLERANCES ARE: *

DECIMALS:
X ±0.5
.X ±0.1
.XX ±0.05

ANGLES: ±0.5°

MACHINED: 63

* unless otherwise noted

MATERIAL: BLACK NATURAL RUBBER

SCALE: 2.000

APPROVALS	DATE
DRAWN	
CHECKED	
ENGINEER	

NATIONAL HIGHWAY TRAFFIC SAFETY ADMINISTRATION

NECK BUFFER MOLDED 80 SHORE A

SIZE	SHEET	DRAWING NUMBER	REV.
A2	1 OF 1	175-2020-1	A

REVISION RECORD			
REV.	DESCRIPTION	DATE	BY
A	NHTSA PART 575 NPRM RELEASE	7/30/04	DW

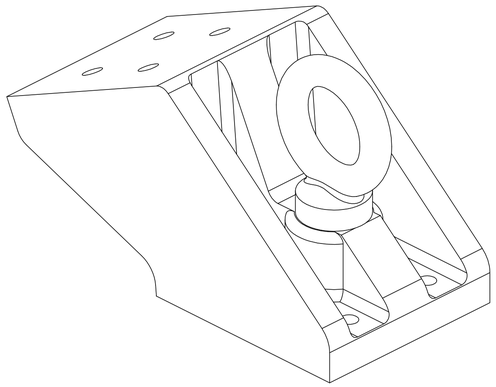

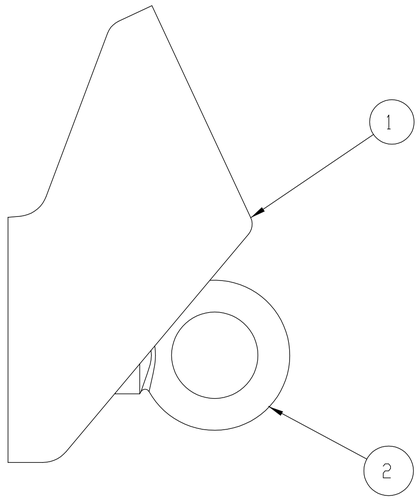

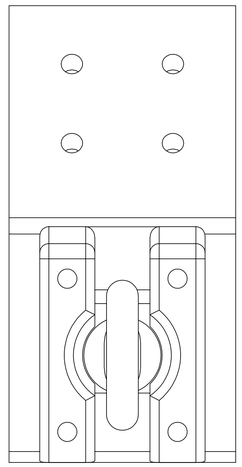

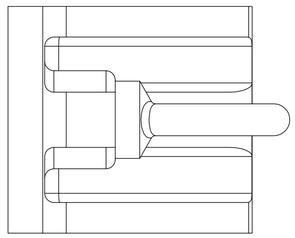

ITEM NO.	QTY	PART NO.	DESCRIPTION
2	1	175–2505	EUROSID EYEBOLT COMPLETE
1	1	175–2501	NECK BRACKET MACHINED

PART LIST

UNITS ARE millimeters

TOLERANCES ARE: *

DECIMALS:
X ±0.5
.X ±0.1
.XX ±0.05

ANGLES: ±0.5°

MACHINED: 63

* unless otherwise noted

MATERIAL

SCALE 1.000

APPROVALS	DATE
DRAWN	
CHECKED	
ENGINEER	

NATIONAL HIGHWAY TRAFFIC SAFETY ADMINISTRATION

NECK BRACKET
INCLUDING LIFTING EYBOLT

SIZE	SHEET	DRAWING NUMBER	REV.
A1	1 OF 1	175–2500	A

REVISION RECORD			
REV.	DESCRIPTION	DATE	BY
A	NHTSA PART 575 NPRM RELEASE	7/30/04	DW

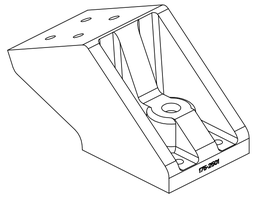

SCALE 0.500

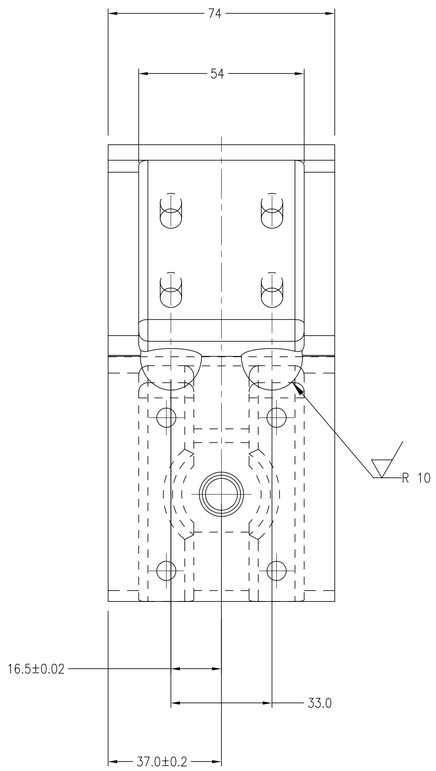

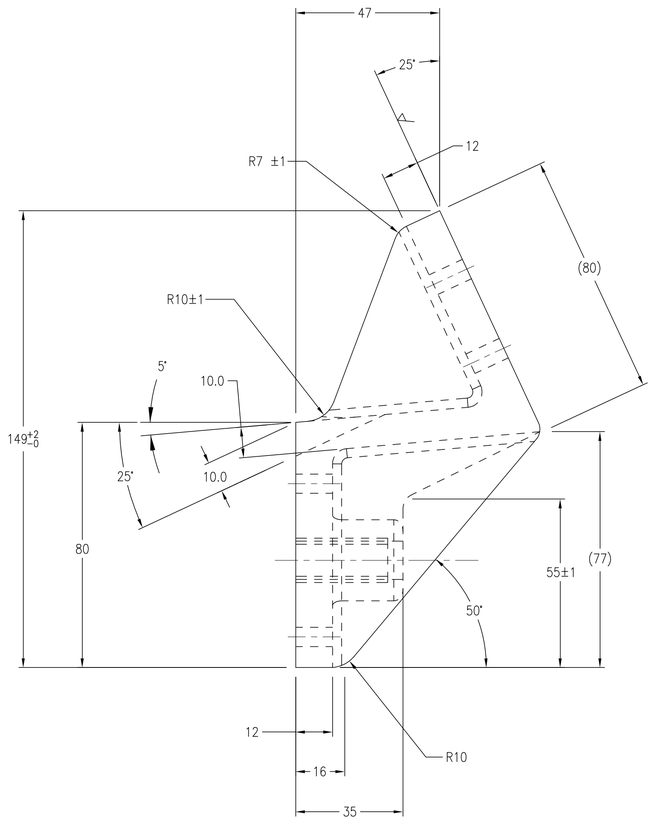

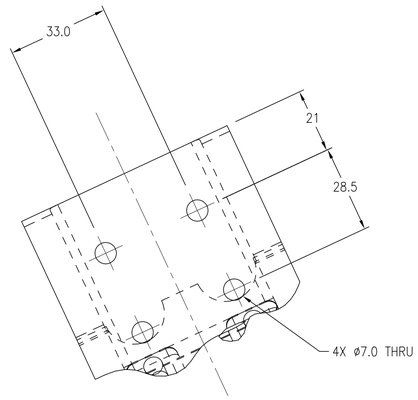

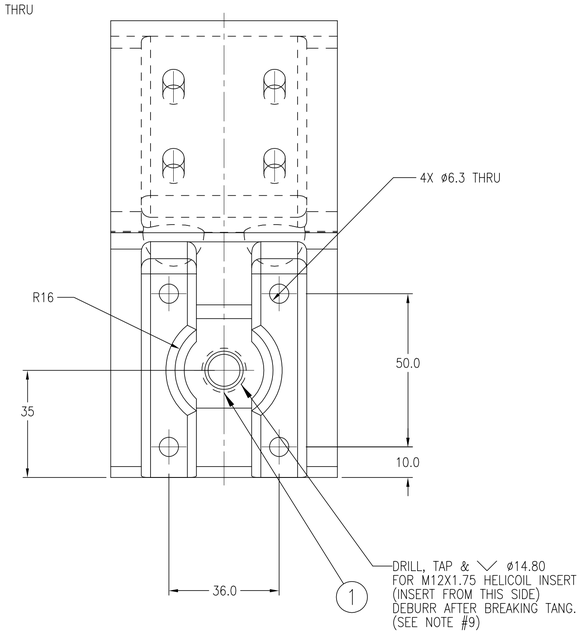

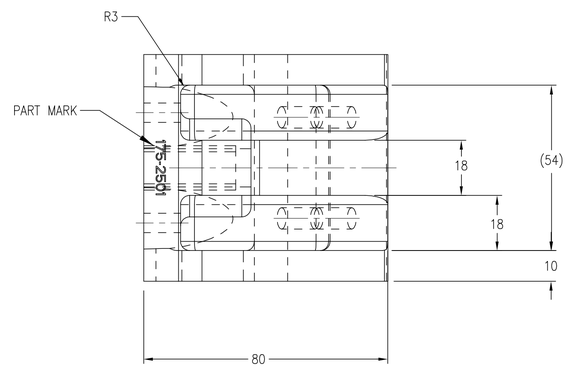

NOTES:

1. 1.5MM MATERIAL TO BE LEFT ON FACES REQUIRING MACHINING.
2. HEAT TREAT TO LM25 TF CONDITION BEFORE MACHINING.
3. MACHINE FACES MARKED 0.8 ⌵ OR BETTER.
4. DRAFT ANGLE 1°.
5. ALL UNSPECIFIED RADII 4.0±0.5MM.
6. REMOVE ALL SHARP EDGES AND BURRS. PRIOR TO ANODISING.
7. STRAIGHT GRAIN MATING FACES AND SIDES 0.8 ⌵
8. SILVER ANODISE TO BS1615, AA10, HOT WATER SEAL.
9. INSERT HELICOIL AFTER ANODIZE.
10. WHERE APPLICABLE, DIMENSIONS ARE SYMMETRICAL ABOUT CENTERLINE.
11. FINISH: BEAD BLAST

ITEM NO.	QTY	PART NO.	DESCRIPTION
1	1	5000344	HELICOIL, M12 X 1.75 X 30

PART LIST

UNITS ARE millimeters

TOLERANCES ARE: *
DECIMALS: X ±0.5, .X ±0.1, .XX ±0.05
ANGLES: ±0.5°
MACHINED: 6.3 ⌵
* unless otherwise noted

MATERIAL: CAST ALUMINUM
SCALE: 1.000

APPROVALS	DATE
DRAWN	
CHECKED	
ENGINEER	

NATIONAL HIGHWAY TRAFFIC SAFETY ADMINISTRATION

NECK BRACKET MACHINED

SIZE A1 | SHEET 1 OF 1 | DRAWING NUMBER 175-2501 | REV. A

REVISION RECORD			
REV.	DESCRIPTION	DATE	BY
A	NHTSA PART 572 NPRM RELEASE	7/30/04	DW

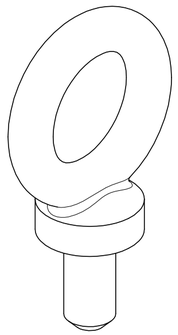

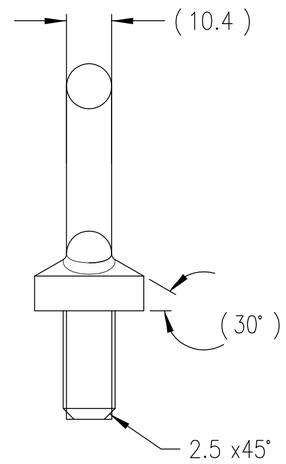

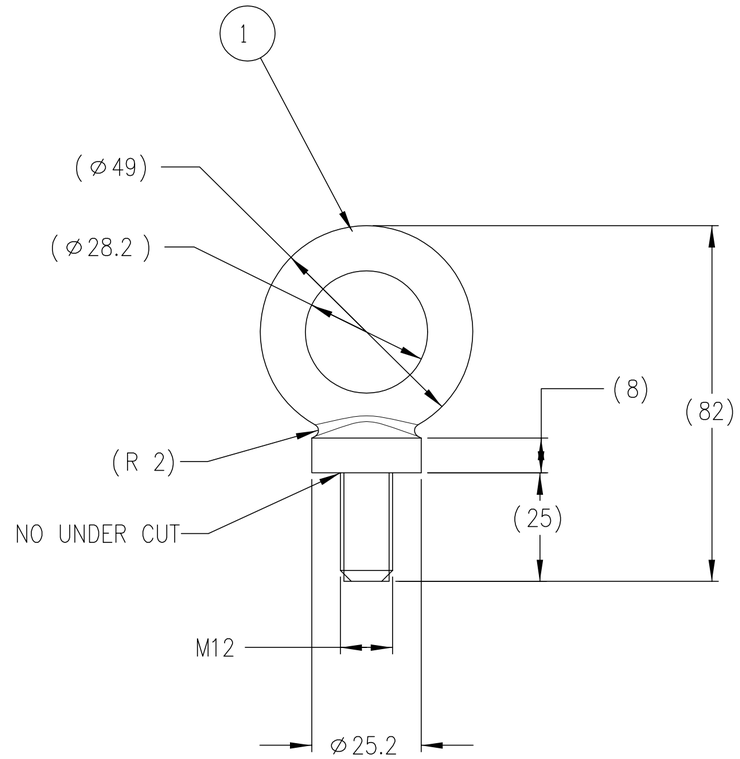

NOTES:

1. PAINT LIGHT GREY, DO NOT PAINT THREAD

ITEM NO.	QTY	PART NO.	DESCRIPTION
1	1	5000042	EYEBOLT M12 X 1.75 X 27

PART LIST

UNITS ARE millimeters

TOLERANCES ARE: *

DECIMALS:
X ±0.5
.X ±0.1
.XX ±0.05

ANGLES: ±0.5°

MACHINED: 63

* unless otherwise noted

MATERIAL

SCALE 1.000

APPROVALS	DATE
DRAWN	
CHECKED	
ENGINEER	

NATIONAL HIGHWAY TRAFFIC SAFETY ADMINISTRATION

EUROSID EYEBOLT COMPLETE

SIZE	SHEET	DRAWING NUMBER	REV.
A2	1 OF 1	175-2505	A

REVISION RECORD			
REV.	DESCRIPTION	DATE	BY
A	NHTSA PART 575 NPRM RELEASE	7/30/04	DW

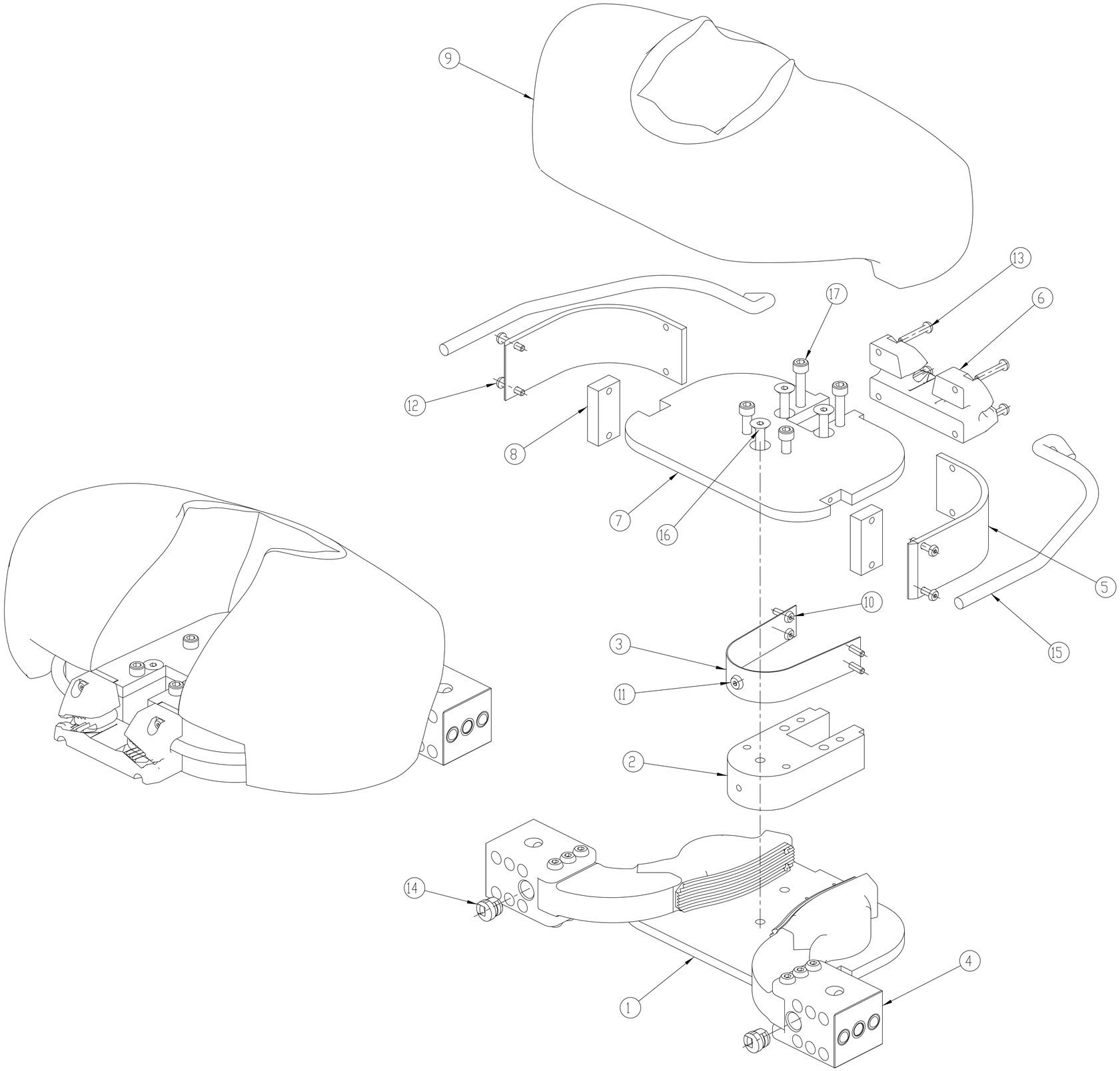

ITEM NO.	QTY	PART NO.	DESCRIPTION
17	4	5000008	SCREW, SHCS M6 X 1 X 30
16	3	5000009	SCREW, FHCS M6 X 1 X 50
15	2	175-3015	BUNGEE CORD
14	2	9002370	BUSHING
13	4	5000004	SCREW, BHCS M4 X 0.7 X 25
12	4	5000007	SCREW, BHCS M4 X 0.7 X 20
11	1	5000003	SCREW, BHCS M5 X 0.8 X 10
10	4	5000005	SCREW, BHCS M4 X 0.7 X 12
9	1	175-3010	SHOULDER FOAM PAD
8	2	175-3009	CAM STOP BLOCK
7	1	175-3008	SHOULDER TOP PLATE
6	1	175-3007	ELASTIC CORD HOLDER
5	2	175-3006	SHOULDER COVER PLATE
4	2	175-3004	SHOULDER CAM CLAVICLE ASSEMBLY FOR LOADCELL
3	1	175-3003	SHOULDER "U" SPRING
2	1	175-3002	SHOULDER SPACER BLOCK
1	1	175-3001	SHOULDER BOTTOM PLATE

PART LIST

UNITS ARE millimeters

TOLERANCES ARE: *

DECIMALS:
X ±0.5
.X ±0.1
.XX ±0.05

ANGLES: ±0.5°

MACHINED: 63

* unless otherwise noted

MATERIAL

SCALE 0.750

APPROVALS	DATE
DRAWN	
CHECKED	
ENGINEER	

NATIONAL HIGHWAY TRAFFIC SAFETY ADMINISTRATION

SHOULDER ASSEMBLY

SIZE A1 | SHEET 1 OF 1 | DRAWING NUMBER 175-3000 | REV. A

REVISION RECORD			
REV.	DESCRIPTION	DATE	BY
A	NHTSA PART 572 NPRM RELEASE	7/30/04	DW

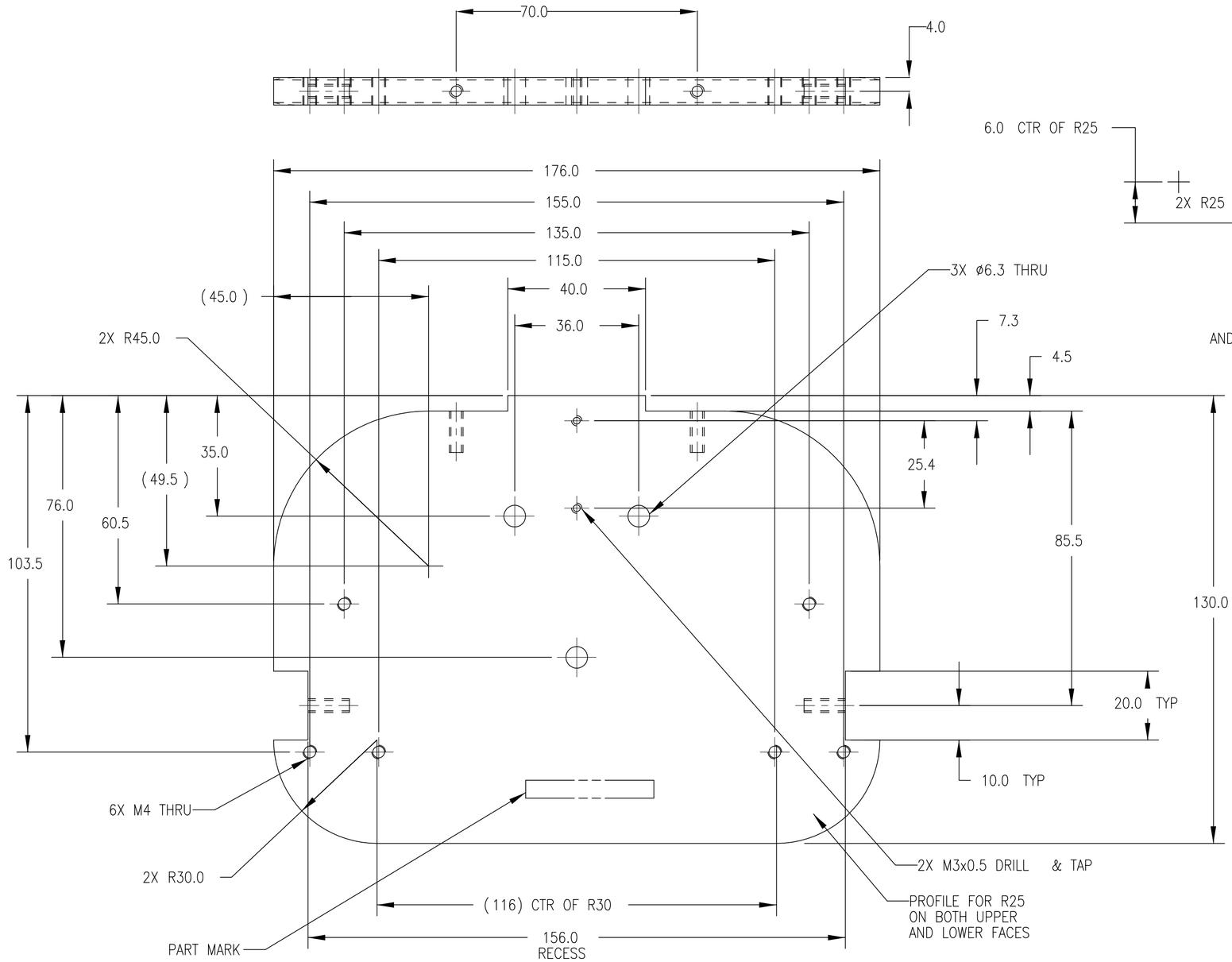

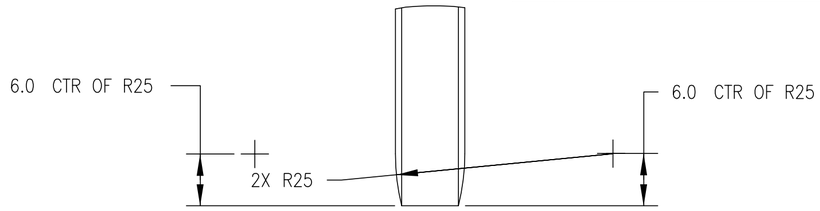

DETAIL A
SCALE 2.00
BLEND R25 INTO TOP
AND BOTTOM SURFACES AS SHOWN

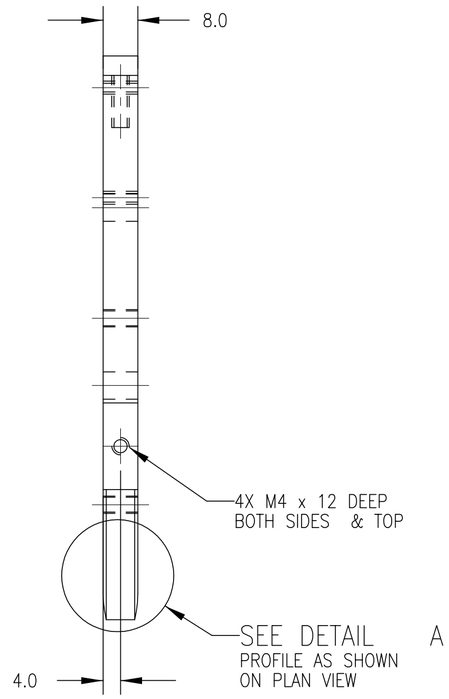

NOTES

1. SURFACE FINISH TO BE STRAIGHT GRAINED TO OR BETTER, ALL OVER UNLESS OTHERWISE STATED 0.8
2. REMOVE ALL SHARP EDGES AND BURRS
3. ALL THREADS TO CONFORM TO BS3643
4. ALL THREADS TO BE CLEAR AND FREE RUNNING
5. HORIZONTAL DIMENSIONS ARE SYMMETRICAL ABOUT CENTERLINE
6. PTFE COAT WITH TUFRAM L4
7. PART MARK 175-3001 WHERE SHOWN AFTER COATING

ITEM NO.	QTY	PART NO.	DESCRIPTION

PART LIST

UNITS ARE millimeters

TOLERANCES ARE: *
DECIMALS: X ±0.5, .X ±0.1, .XX ±0.05
ANGLES: ±0.5°
MACHINED: 63
* unless otherwise noted

MATERIAL: ALUM. ALLOY 6082
SCALE: 1.000

APPROVALS	DATE
DRAWN	
CHECKED	
ENGINEER	

NATIONAL HIGHWAY TRAFFIC SAFETY ADMINISTRATION

SHOULDER BOTTOM PLATE

SIZE	SHEET	DRAWING NUMBER	REV.
A2	1 OF 1	175-3001	A

REVISION RECORD			
REV.	DESCRIPTION	DATE	BY
A	NHTSA PART 572 NPRM RELEASE	7/30/04	DW

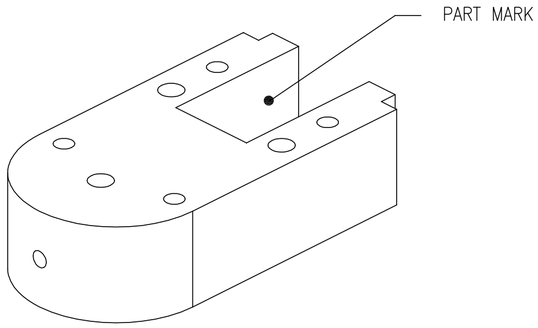

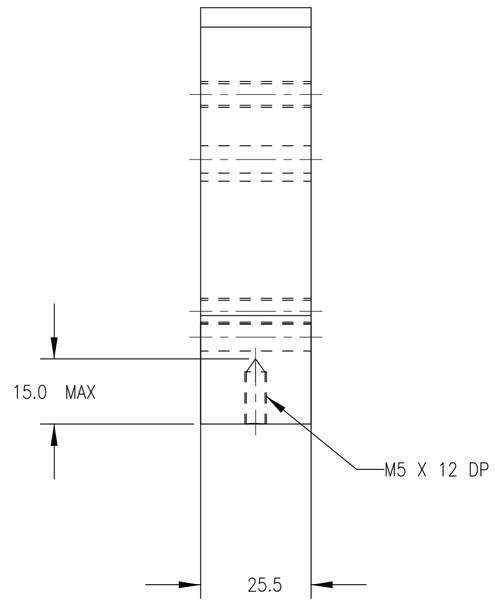

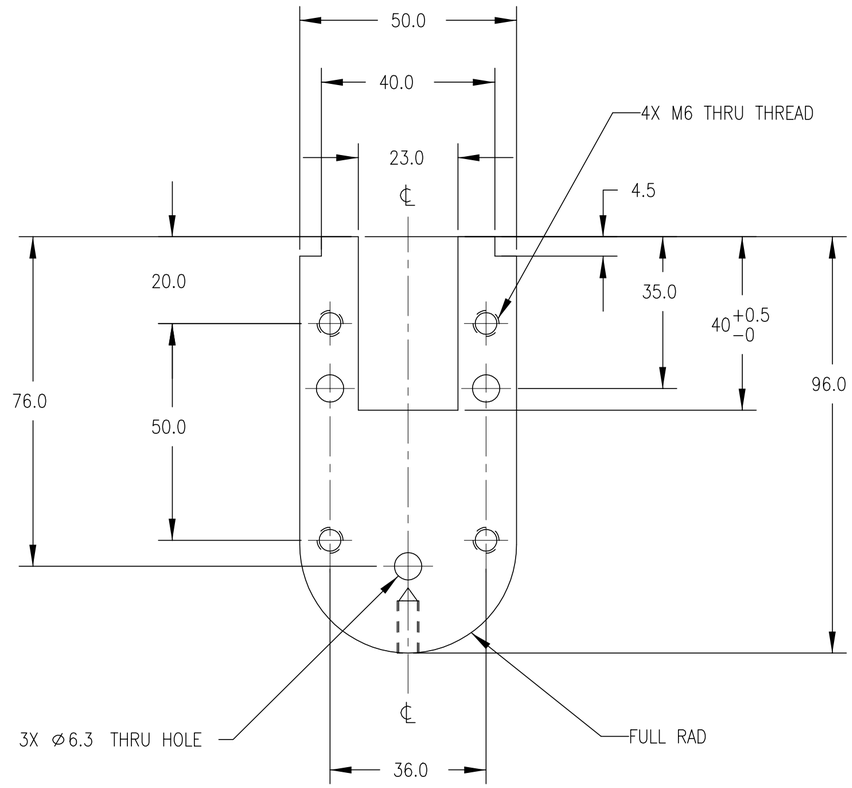

NOTES:

0.8

1. SURFACE FINISH TO BE STRAIGHT GRAINED TO OR BETTER, ALL OVER UNLESS OTHERWISE STATED.
2. REMOVE ALL SHARP EDGES AND BURRS PRIOR TO ANODIZING.
3. ALL THREADS TO CONFORM TO BS3643.
4. ALL THREADS TO BE CLEAR & FREE RUNNING.
5. SILVER ANODIZE TO BS1615, AA10, HOT WATER SEAL.
6. PART MARK WITH INDELIBLE PEN '175-3002' FOLLOWED BY SERIAL NO. WHERE SHOWN.

ITEM NO.	QTY	PART NO.	DESCRIPTION

PART LIST

UNITS ARE millimeters

TOLERANCES ARE: *

DECIMALS:
X ±0.5
.X ±0.1
.XX ±0.05

ANGLES: ±0.5°

MACHINED: 63

* unless otherwise noted

MATERIAL: ALUM. 6082

SCALE: 1.000

APPROVALS	DATE
DRAWN	
CHECKED	
ENGINEER	

NATIONAL HIGHWAY TRAFFIC SAFETY ADMINISTRATION

SHOULDER SPACER BLOCK

SIZE	SHEET	DRAWING NUMBER	REV.
A2	1 OF 1	175-3002	A

REVISION RECORD			
REV.	DESCRIPTION	DATE	BY
A	NHTSA PART 572 NPRM RELEASE	7/30/04	DW

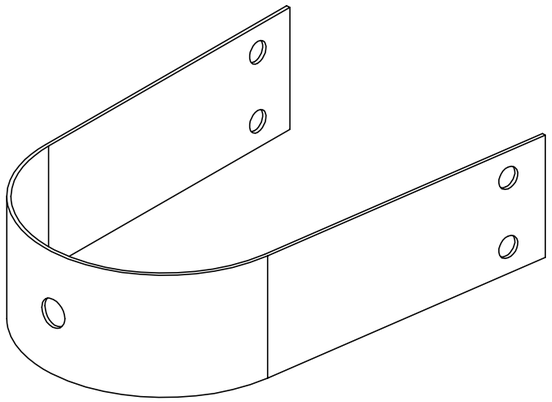

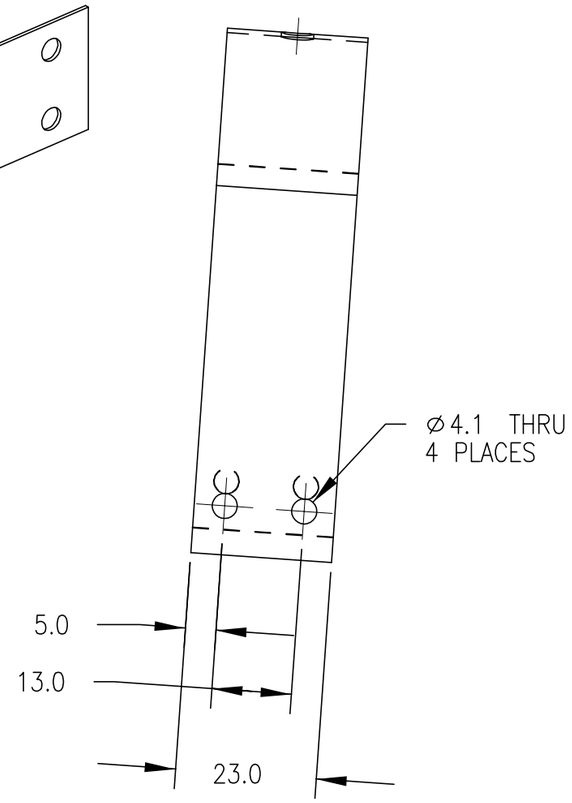

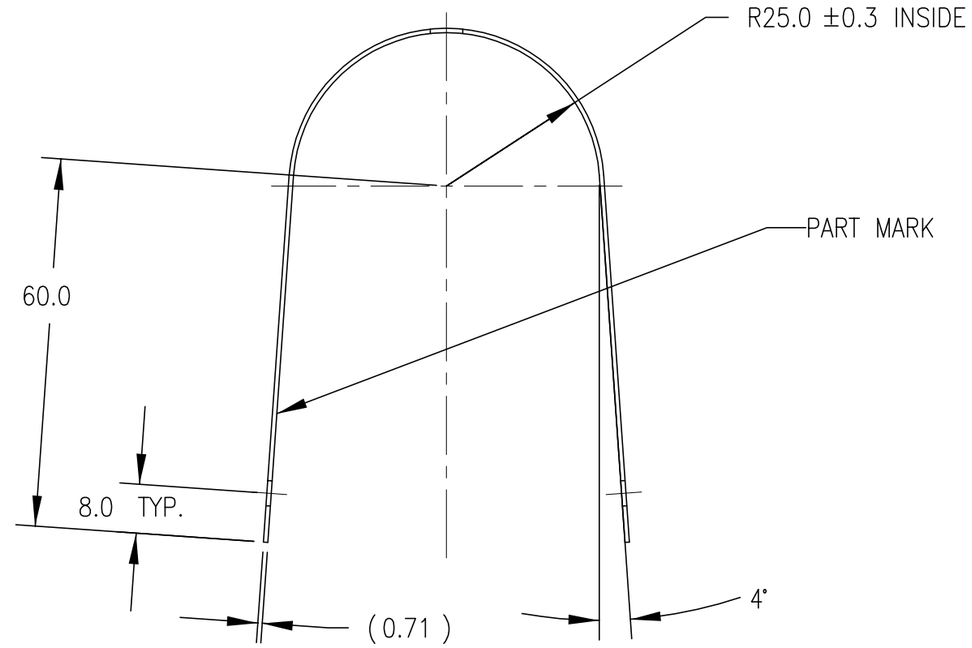

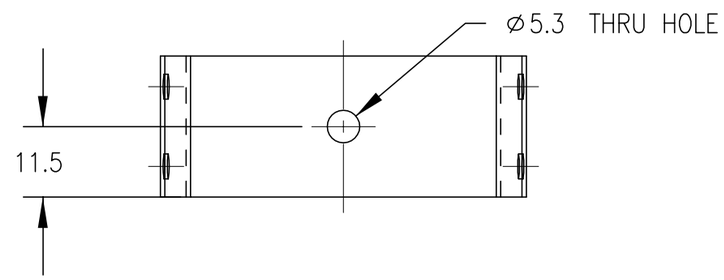

NOTES:

1. MATERIAL: BS 1449 CS70 OR CS80 ANNEALED SPRING STEEL.
2. REMOVE ALL SHARP EDGES AND BURRS.
3. FINISH TO BE 3.2 OR BETTER.
4. VIBRO ETCH CODE '175-3003' FOLLOWED BY SERIAL NO. WHERE SHOWN.

ITEM NO.	QTY	PART NO.	DESCRIPTION

PART LIST

UNITS ARE millimeters

TOLERANCES ARE: *

DECIMALS:
X ±0.5
.X ±0.1
.XX ±0.05

ANGLES: ±0.5°

MACHINED: 63

* unless otherwise noted

MATERIAL: SEE NOTES

SCALE: 1.000

APPROVALS	DATE
DRAWN	
CHECKED	
ENGINEER	

NATIONAL HIGHWAY TRAFFIC SAFETY ADMINISTRATION

SHOULDER "U" SPRING

SIZE	SHEET	DRAWING NUMBER	REV.
A3	1 OF 1	175-3003	A

REVISION RECORD			
REV.	DESCRIPTION	DATE	BY
A	NHTSA PART 572 NPRM RELEASE	7/30/04	DW

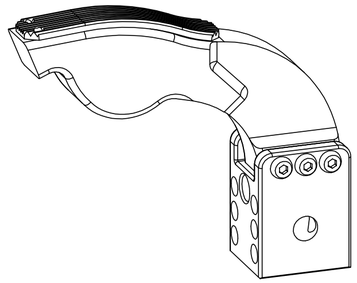

SCALE 0.500

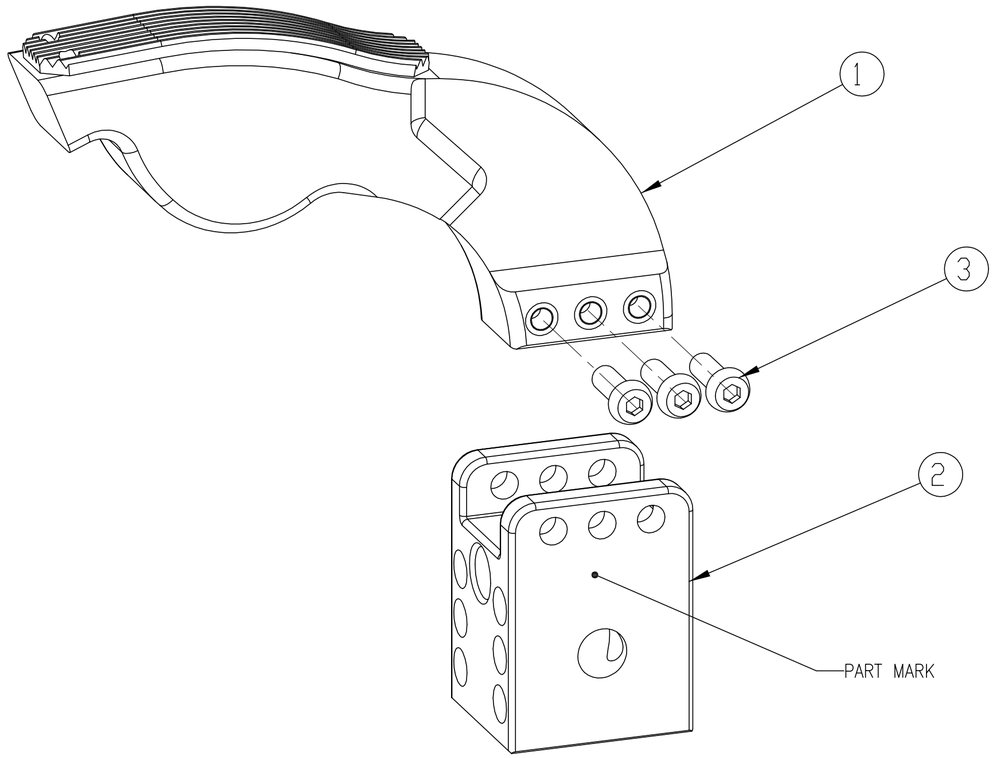

NOTES:

1. PART MARK WITH INDELIBLE PEN 175-3004.

ITEM NO.	QTY	PART NO.	DESCRIPTION
3	6	5000465	SCREW, BHCS M6 X 1 X 18
2	1	175-3018	STRUCTURAL REPLACEMENT
1	1	175-3016	SHOULDER CAM CLAVICLE ASSY

PART LIST

UNITS ARE millimeters

TOLERANCES ARE: *

DECIMALS:
X ±0.5
.X ±0.1
.XX ±0.05

ANGLES: ±0.5°

MACHINED: 63

* unless otherwise noted

MATERIAL

SCALE 1.000

APPROVALS	DATE
DRAWN	
CHECKED	
ENGINEER	

NATIONAL HIGHWAY TRAFFIC SAFETY ADMINISTRATION

SHOULDER CAM CLAVICLE ASSEMBLY

SIZE	SHEET	DRAWING NUMBER	REV.
A2	1 OF 1	175-3004	A

REVISION RECORD			
REV.	DESCRIPTION	DATE	BY
A	NHTSA PART 572 NPRM RELEASE	7/30/04	DW

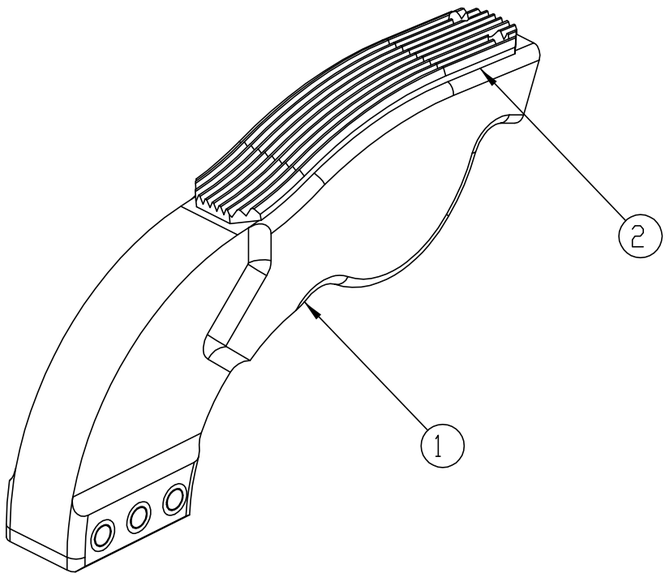

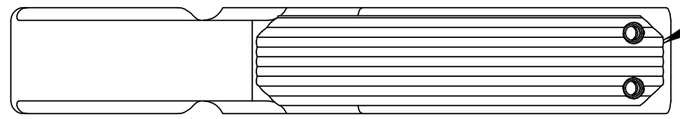

SCRATCH CLAVICLE AS SHOWN BEFORE BONDING ROUGH UNDERSIDE OF BUFFER (ITEM #2) 175-3011 WITH P60 GRADE PAPER.

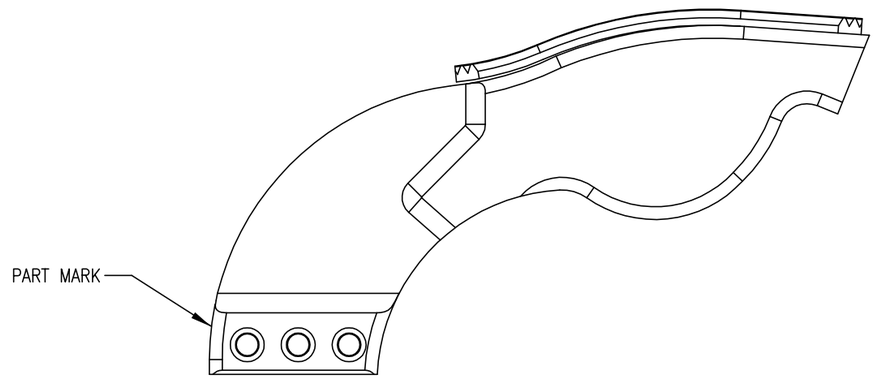

NOTES:

1. PART MARK WITH INDELIBLE PEN 175-3016

ITEM NO.	QTY	PART NO.	DESCRIPTION
2	1	175-3011	CAM BUFFER PAD
1	1	175-3017	SHOULDER CAM CLAVICLE

PART LIST

UNITS ARE millimeters

TOLERANCES ARE: *

DECIMALS:
X ±0.5
.X ±0.1
.XX ±0.05

ANGLES: ±0.5°

MACHINED: 63

* unless otherwise noted

MATERIAL

SCALE 1.000

APPROVALS	DATE
DRAWN	
CHECKED	
ENGINEER	

NATIONAL HIGHWAY TRAFFIC SAFETY ADMINISTRATION

SHOULDER CAM CLAVICLE ASSY

SIZE	SHEET	DRAWING NUMBER	REV.
A2	1 OF 1	175-3016	A

REVISION RECORD			
REV.	DESCRIPTION	DATE	BY
A	NHTSA PART 575 NPRM RELEASE	7/30/04	DW

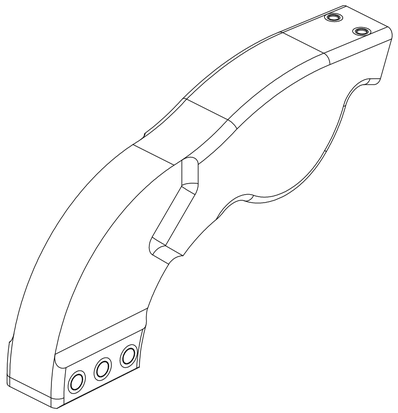

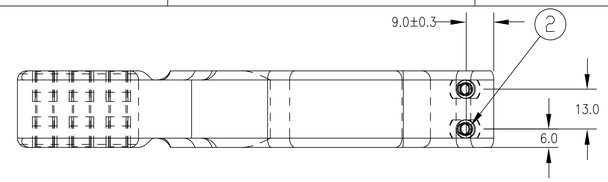

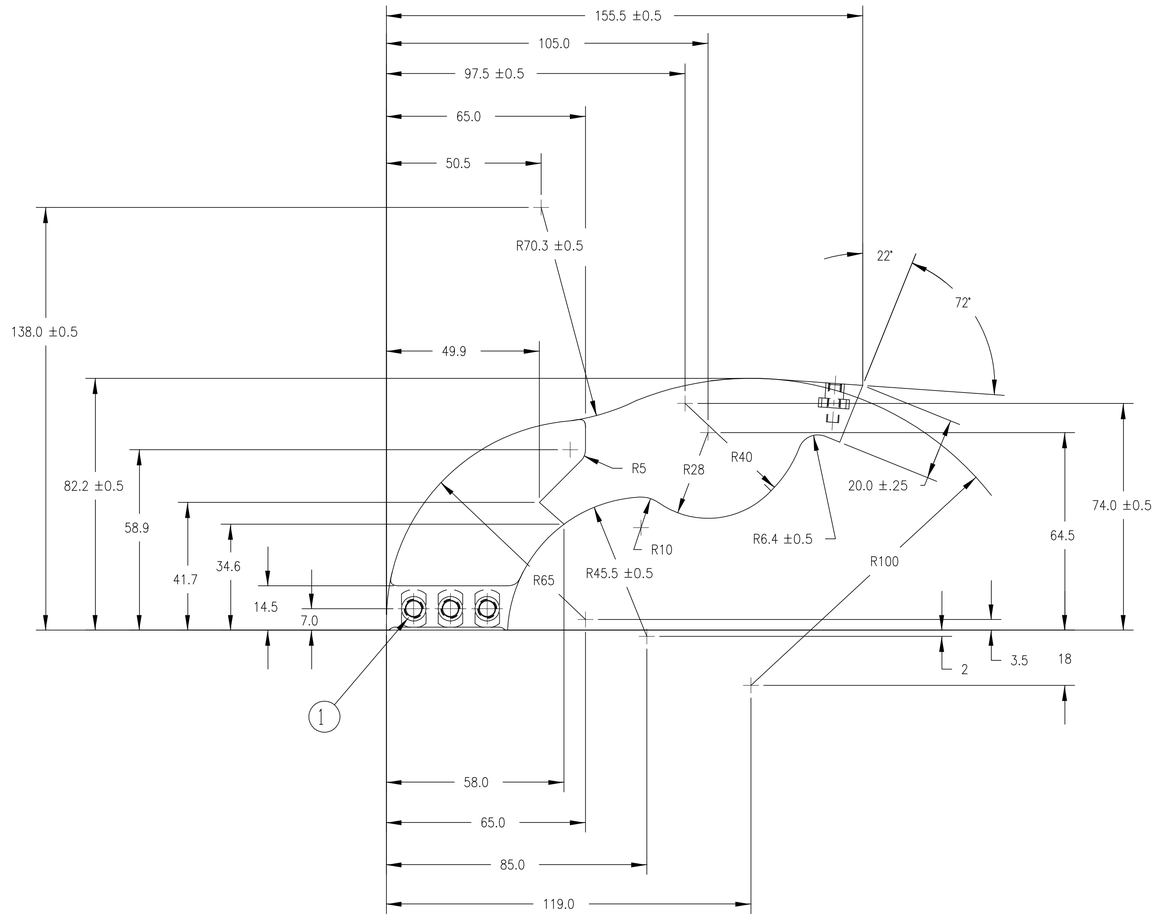

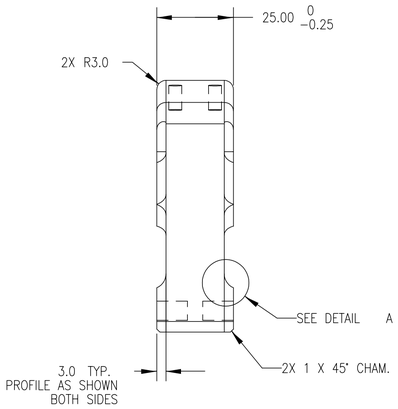

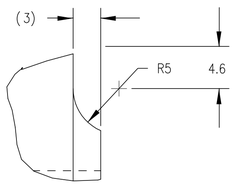

DETAIL A
SCALE 3.000

TYPICAL EDGE DETAIL FOR RECESS BOTH SIDES

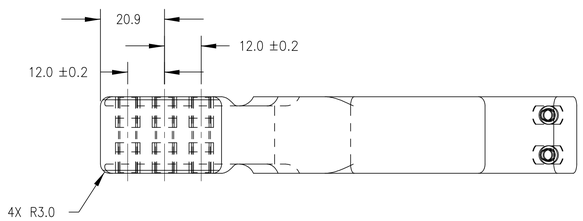

NOTES:

1. SURFACE FINISH TO BE 0.8 OR BETTER ALL OVER UNLESS OTHERWISE STATED.
2. REMOVE BURRS AND BREAK ALL SHARP EDGES.
3. ALL THREADS TO CONFORM TO BS3643.
4. ALL UNTOLERANCED DIMENSIONS ±1mm.

ITEM NO.	QTY	PART NO.	DESCRIPTION
2	2	175−3005−2	T−INSERT SS M4 X 12
1	6	175−3005−3	T−INSERT, M6

PART LIST

UNITS ARE millimeters

TOLERANCES ARE: *

DECIMALS:
X ±0.5
.X ±0.1
.XX ±0.05

ANGLES: ±0.5°

MACHINED: 6.3

* unless otherwise noted

MATERIAL: MOULDED UREOL 100

SCALE: 1.000

APPROVALS	DATE
DRAWN	
CHECKED	
ENGINEER	

NATIONAL HIGHWAY TRAFFIC SAFETY ADMINISTRATION

SHOULDER CAM CLAVICLE

SIZE	SHEET	DRAWING NUMBER	REV.
A1	1 OF 1	175−3017	A

REVISION RECORD			
REV.	DESCRIPTION	DATE	BY
A	NHTSA PART 572 NPRM RELEASE	7/30/04	DW

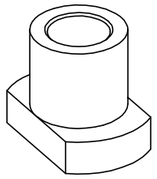

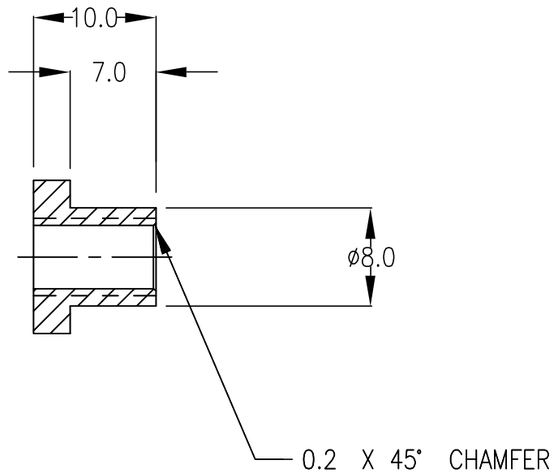

SECTION A–A

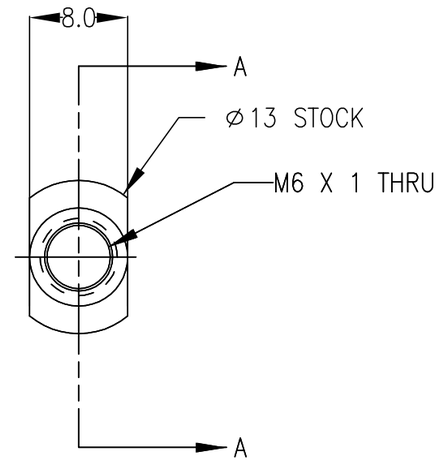

NOTES:

1. REMOVE BURRS AND BREAK SHARP EDGES.
2. SURFACE FINISH SHALL BE 3.2 OR BETTER.
3. THREADS SHALL CONFORM TO BS3643.

ITEM NO.	QTY	PART NO.	DESCRIPTION

PART LIST

UNITS ARE millimeters

TOLERANCES ARE: *

DECIMALS:
X ±0.5
.X ±0.1
.XX ±0.05

ANGLES: ±0.5°

MACHINED: 63

* unless otherwise noted

MATERIAL: STAINLESS STEEL

SCALE: 2.000

APPROVALS	DATE
DRAWN	
CHECKED	
ENGINEER	

NATIONAL HIGHWAY TRAFFIC SAFETY ADMINISTRATION

T–INSERT, M6

SIZE	SHEET	DRAWING NUMBER	REV.
A3	1 OF 1	175–3005–3	A

REVISION RECORD			
REV.	DESCRIPTION	DATE	BY
A	NHTSA PART 572 NPRM RELEASE	7/30/04	DW

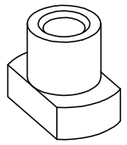

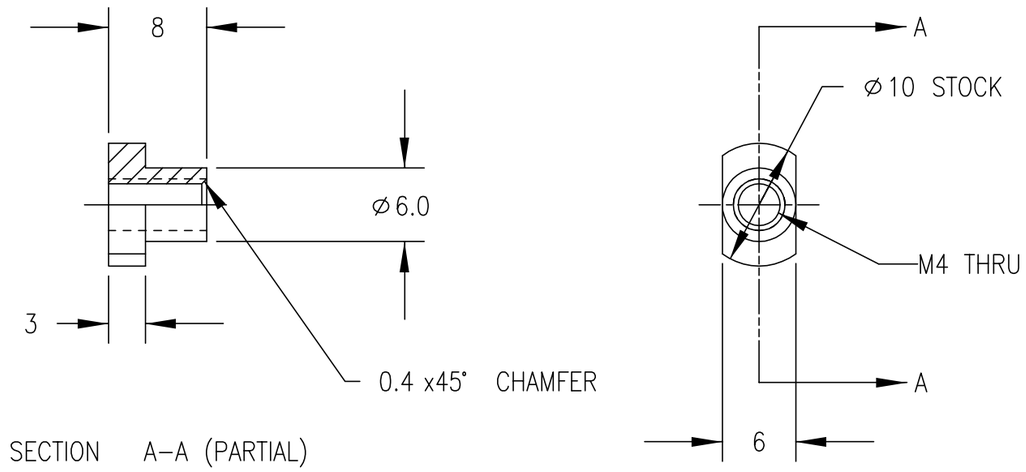

NOTES:

1. REMOVE BURRS AND BREAK SHARP EDGES.
2. SURFACE FINISH SHALL BE 3.2 OR BETTER.
3. THREADS SHALL CONFORM TO BS3643.

ITEM NO.	QTY	PART NO.	DESCRIPTION

PART LIST

UNITS ARE millimeters

TOLERANCES ARE: *

DECIMALS:
X ±0.5
.X ±0.1
.XX ±0.05

ANGLES: ±0.5°

MACHINED: 63

* unless otherwise noted

MATERIAL: STAINLESS STEEL

SCALE: 2.000

APPROVALS	DATE
DRAWN	
CHECKED	
ENGINEER	

NATIONAL HIGHWAY TRAFFIC SAFETY ADMINISTRATION

T–INSERT SS M4 X 12

SIZE	SHEET	DRAWING NUMBER	REV.
A3	1 OF 1	175–3005–2	A

REVISION RECORD			
REV.	DESCRIPTION	DATE	BY
A	NHTSA PART 572 NPRM RELEASE	7/30/04	DW

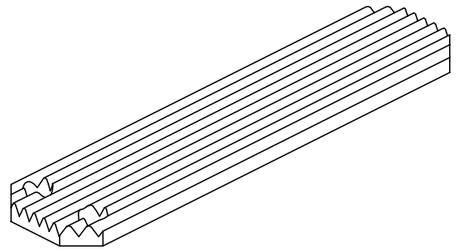

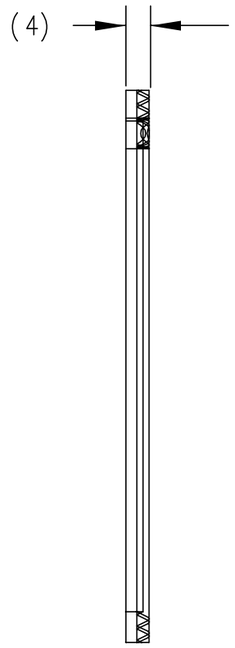

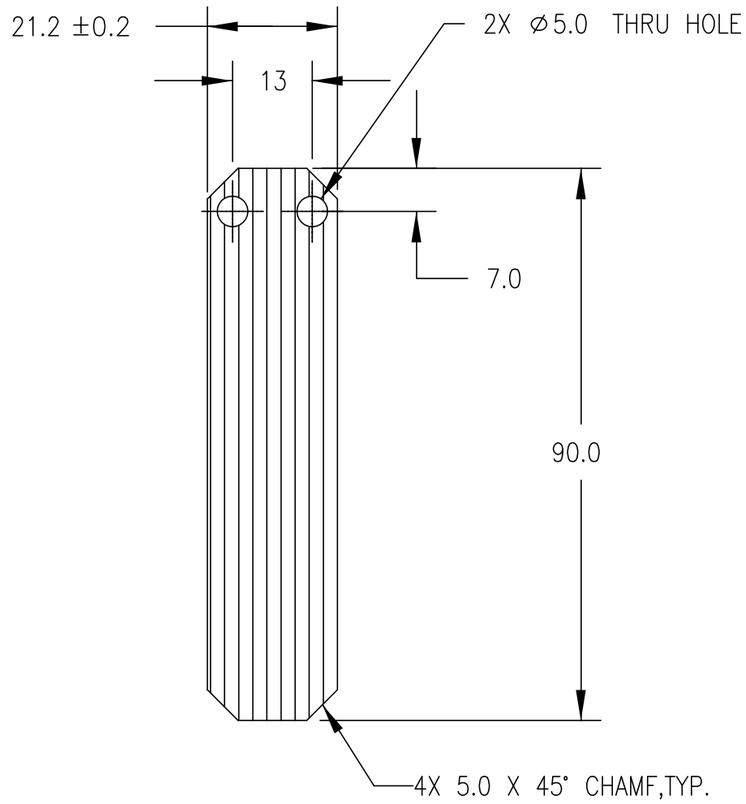

NOTES:

1. MATERIAL, 9-RIBBED POLY-V BELT "J" SECTION.

ITEM NO.	QTY	PART NO.	DESCRIPTION

PART LIST

UNITS ARE millimeters

TOLERANCES ARE: *

DECIMALS:
X ±0.5
.X ±0.1
.XX ±0.05

ANGLES: ±0.5°

MACHINED: 63

* unless otherwise noted

MATERIAL	SEE NOTE #1	
SCALE	1.000	
APPROVALS		DATE
DRAWN		
CHECKED		
ENGINEER		

NATIONAL HIGHWAY TRAFFIC SAFETY ADMINISTRATION

CAM BUFFER PAD

SIZE	SHEET	DRAWING NUMBER	REV.
A3	1 OF 1	175-3011	A

REVISION RECORD			
REV.	DESCRIPTION	DATE	BY
A	NHTSA PART 575 NPRM RELEASE	7/30/04	DW

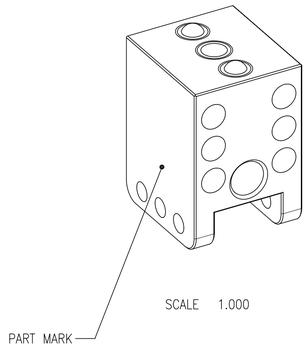

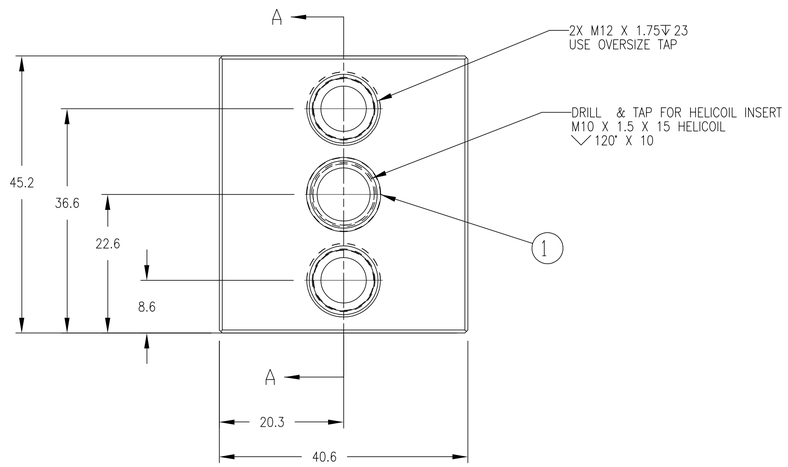

HIDDEN LINES NOT SHOWN

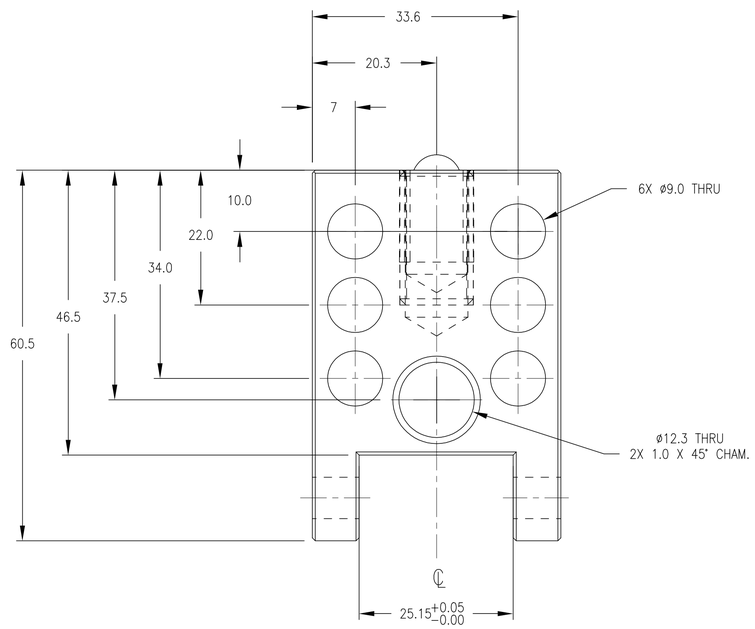

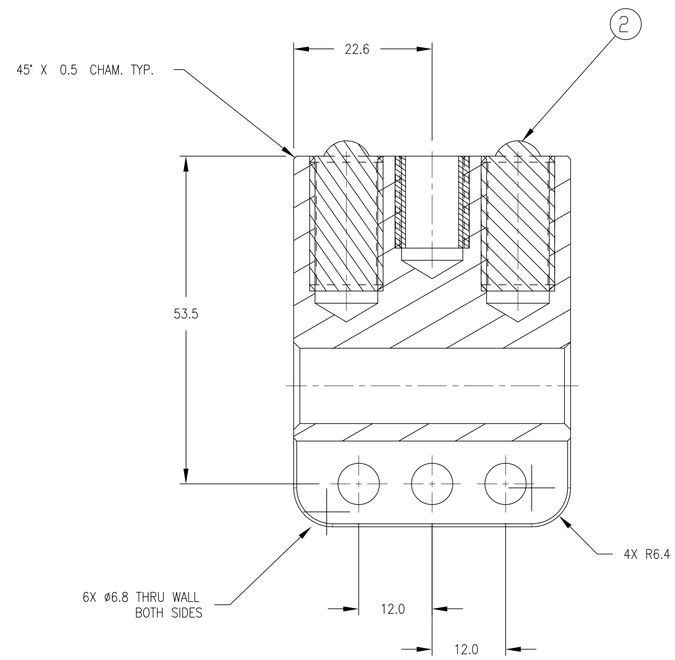

SECTION A-A

NOTES:

1. REMOVE BURRS AND BREAK SHARP EDGES.
2. INSTALL ITEM 2 AS SHOWN.
3. STAMP OR ETCH PART NUMBER AND REVISION LETTER WHERE SHOWN.

ITEM NO.	QTY	PART NO.	DESCRIPTION
2	2	3000081	BALL SPRING PLUNGER, M12 X 1.75 X 22
1	1	5000074	HELICOIL, M10 X 1.5 X 15

PART LIST

UNITS ARE millimeters

TOLERANCES ARE: *

DECIMALS:
X ±0.5
.X ±0.1
.XX ±0.05

ANGLES: ±0.5°

MACHINED: 63 ∨

* unless otherwise noted

MATERIAL: 7075-T6 AL.

SCALE: 2.000

APPROVALS	DATE
DRAWN	
CHECKED	
ENGINEER	

NATIONAL HIGHWAY TRAFFIC SAFETY ADMINISTRATION

SHOULDER LOAD CELL

STRUCTURAL REPLACEMENT

SIZE	SHEET	DRAWING NUMBER	REV.
A1	1 OF 1	175-3018	A

REVISION RECORD			
REV.	DESCRIPTION	DATE	BY
A	NHTSA PART 575 NPRM RELEASE	7/30/04	DW

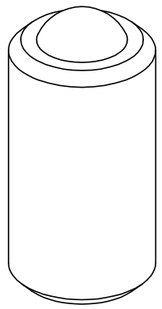

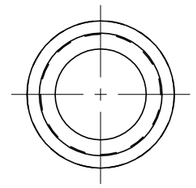

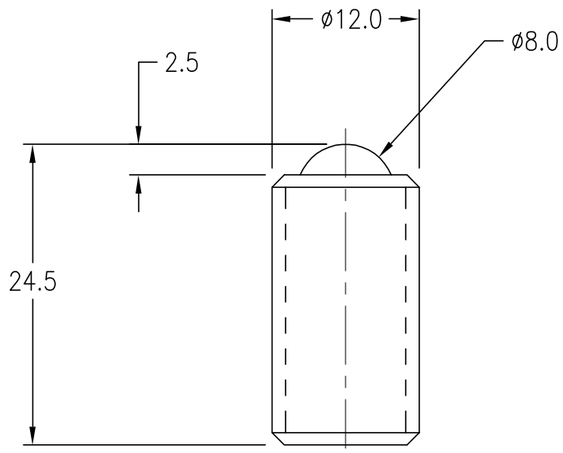

ITEM NO.	QTY	PART NO.	DESCRIPTION

PART LIST

UNITS ARE millimeters

TOLERANCES ARE: *

DECIMALS:
X ±0.5
.X ±0.1
.XX ±0.05

ANGLES: ±0.5°

MACHINED: 63

* unless otherwise noted

MATERIAL	STAINLESS STEEL
SCALE	2.000
APPROVALS	DATE
DRAWN	
CHECKED	
ENGINEER	

NATIONAL HIGHWAY TRAFFIC SAFETY ADMINISTRATION

BALL SPRING PLUNGER

M12 X 1.75 X 22

SIZE	SHEET	DRAWING NUMBER	REV.
A3	1 OF 1	3000081	A

REVISION RECORD			
REV.	DESCRIPTION	DATE	BY
A	NHTSA PART 572 NPRM RELEASE	7/30/04	DW

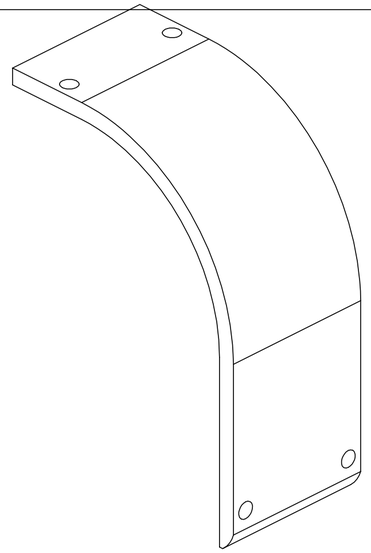

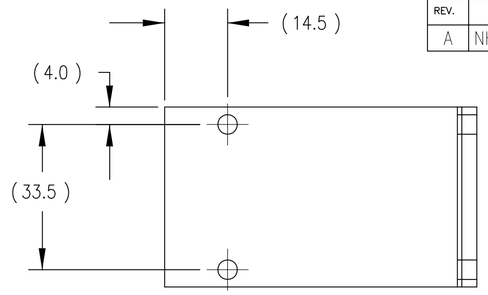

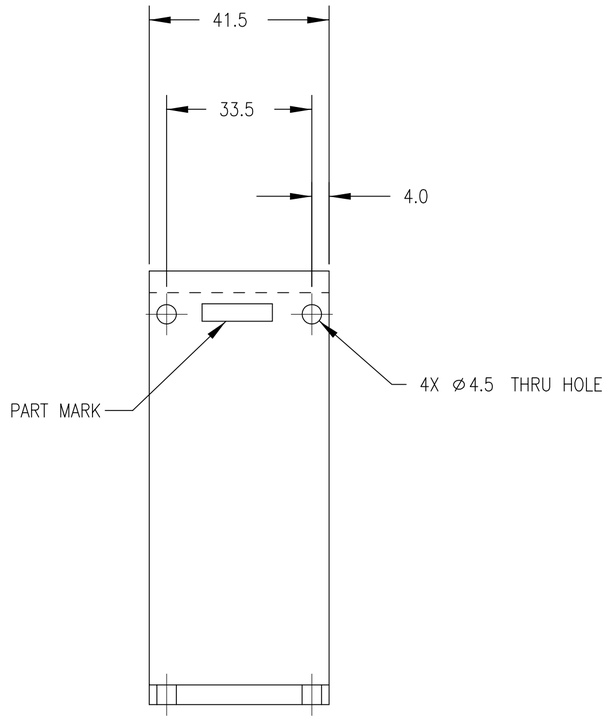

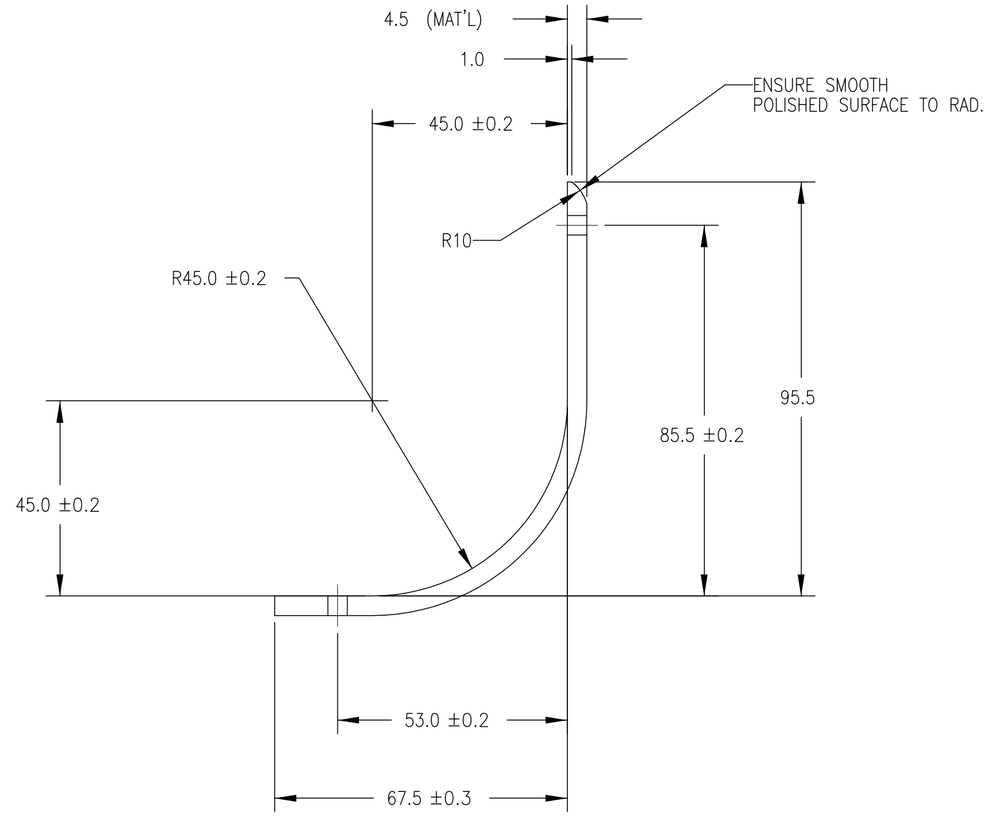

NOTES:

1. MANUFACTURE FROM 1 LAYER SHEET
   SHINY SURFACE FINISH MUST REMAIN AS SUPPLIED
   AND BE FREE FROM SCRATCHES AND INDENTATIONS.
2. REMOVE ALL BURRS AND BREAK SHARP EDGES.
3. PART MARK WITH INDELIBLE PEN '175-3006' FOLLOWED
   BY SERIAL NO. WHERE SHOWN.

ITEM NO.	QTY	PART NO.	DESCRIPTION

PART LIST

UNITS ARE millimeters

TOLERANCES ARE: *

DECIMALS:
X ±0.5
.X ±0.1
.XX ±0.05

ANGLES: ±0.5°

MACHINED: 63

* unless otherwise noted

MATERIAL: ABS WHITE

SCALE: 1.000

APPROVALS	DATE
DRAWN	
CHECKED	
ENGINEER	

NATIONAL HIGHWAY TRAFFIC SAFETY ADMINISTRATION

SHOULDER COVER PLATE

SIZE	SHEET	DRAWING NUMBER	REV.
A2	1 OF 1	175-3006	A

REVISION RECORD			
REV.	DESCRIPTION	DATE	BY
A	NHTSA PART 575 NPRM RELEASE	7/30/04	DW

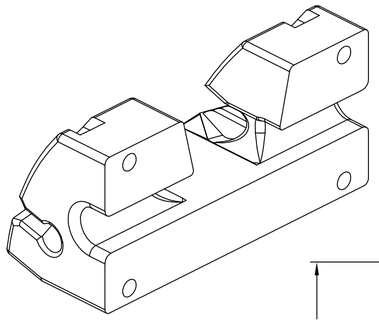

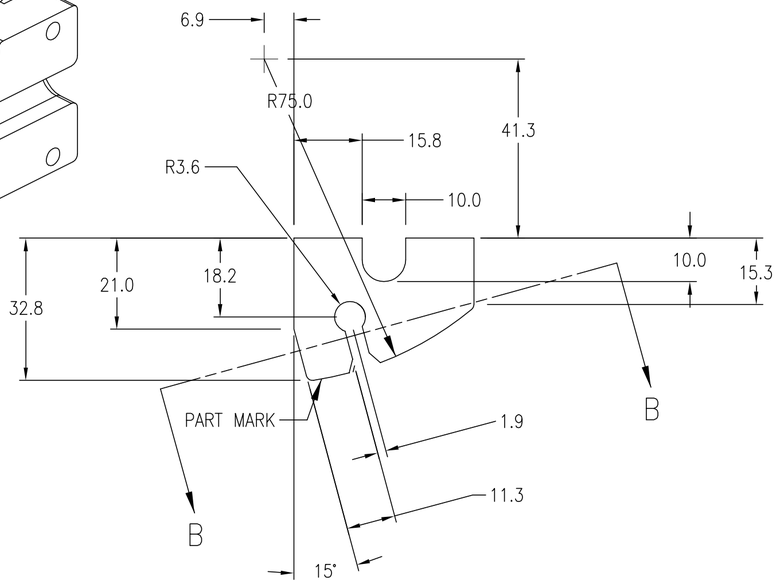

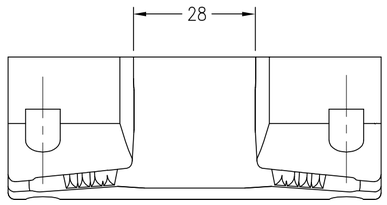

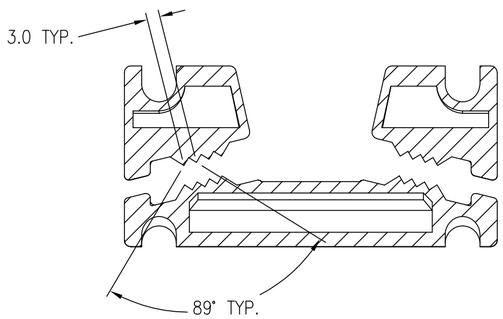

SECTION B–B

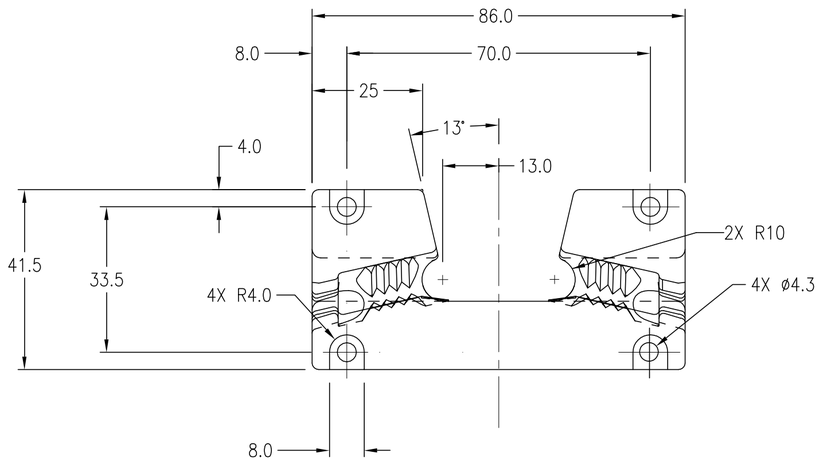

NOTES:
1. SURFACE FINISH TO BE 0.8 GENERALLY UNLESS OTHERWISE STATED.
2. REMOVE ALL SHARP EDGES AND BURRS.
3. PART MARK WITH INDELIBLE PEN '175–3007' FOLLOWED BY SERIAL No WHERE SHOWN.
4. TOLERANCE OF ±1 MM APPLIED TO ALL DIMENSIONS EXCEPT FOR MOUNTING HOLE CENTERS

ITEM NO.	QTY	PART NO.	DESCRIPTION

PART LIST

UNITS ARE millimeters

TOLERANCES ARE: *
DECIMALS: X ±0.5, .X ±0.1, .XX ±0.05
ANGLES: ±0.5°
MACHINED: 63
* unless otherwise noted

MATERIAL: PU RESIN
SCALE: 1.000

APPROVALS	DATE
DRAWN	
CHECKED	
ENGINEER	

NATIONAL HIGHWAY TRAFFIC SAFETY ADMINISTRATION

ELASTIC CORD HOLDER

SIZE	SHEET	DRAWING NUMBER	REV.
A2	1 OF 1	175–3007	A

REVISION RECORD			
REV.	DESCRIPTION	DATE	BY
A	NHTSA PART 572 NPRM RELEASE	7/30/04	DW

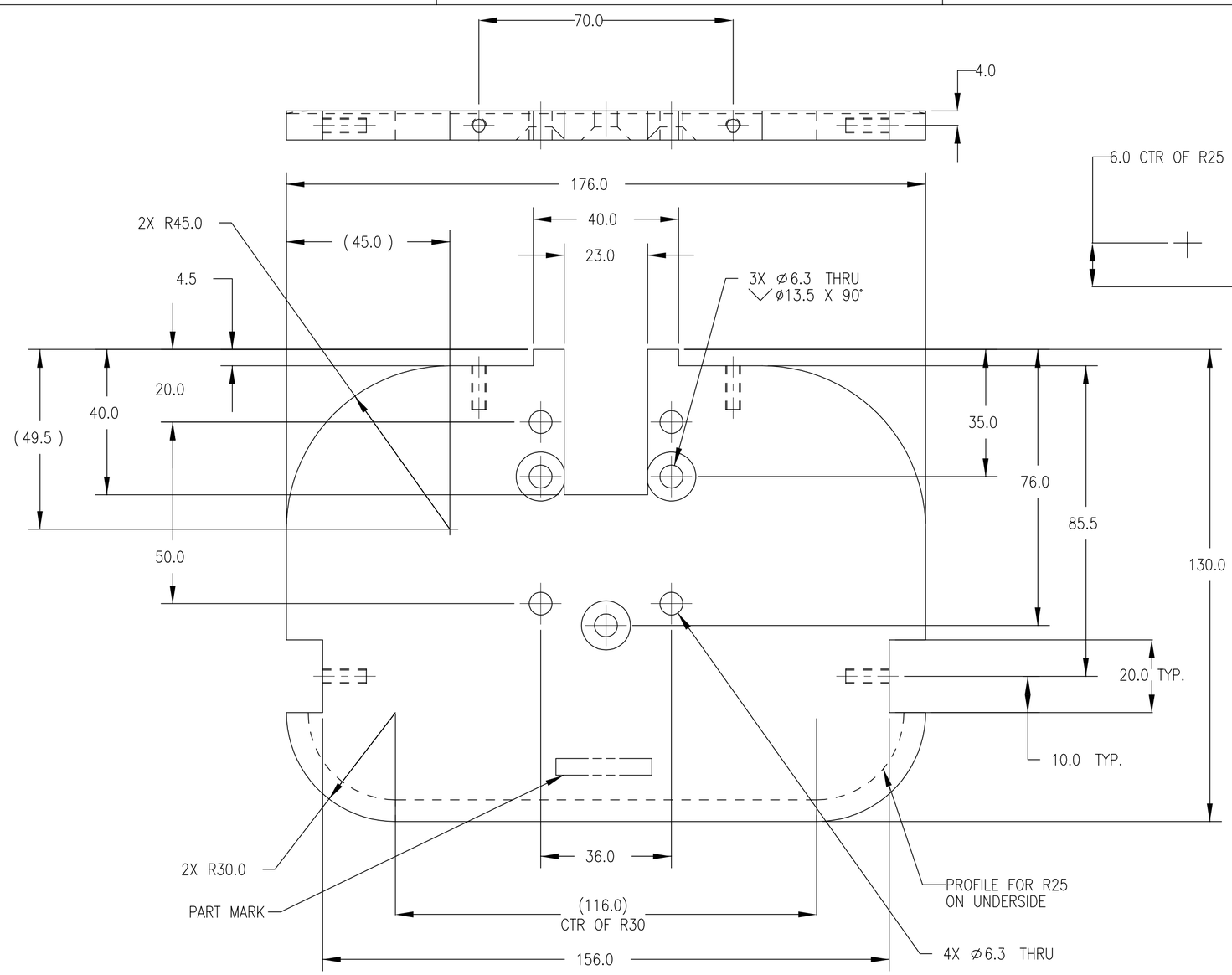

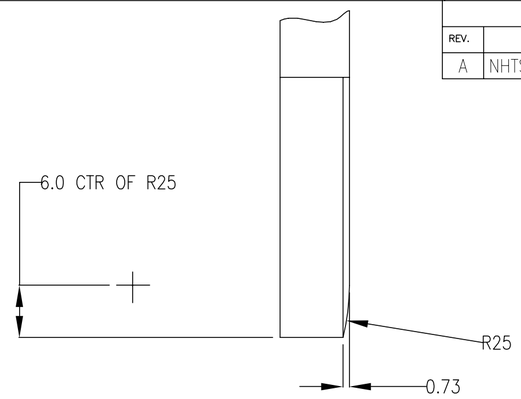

DETAIL A
SCALE 2.00
BLEND INTO BOTTOM
SURFACE AS SHOWN.

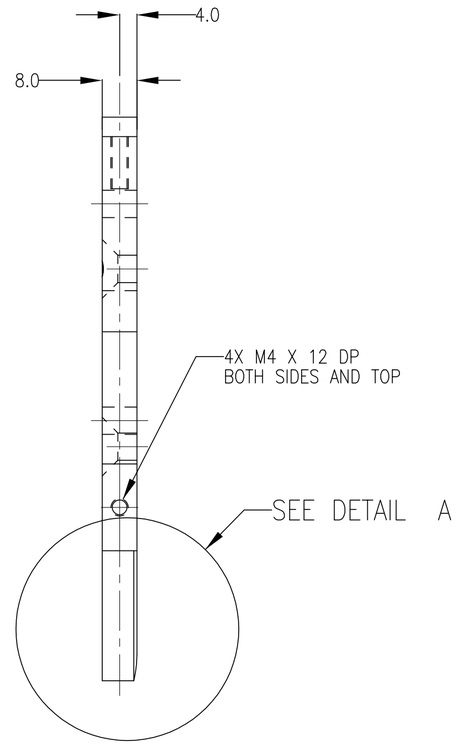

NOTES:

1. SURFACE FINISH TO BE STRAIGHT GRAINED 0.8 OR BETTER, ALL OVER UNLESS OTHERWISE STATED.
2. REMOVE ALL BURRS AND BREAK SHARP EDGES PRIOR TO COATING.
3. THREAD TO CONFORM TO BS3643 & MUST BE CLEAR & FREE RUNNING.
4. HORIZONTAL DIMENSIONS ARE SYMMETRICAL ABOUT CENTERLINE
5. PTFE COAT WITH TUFRAM L4.
6. PART MARK '175-3008' AFTER COATING WITH INDELIBLE PEN FOLLOWED BY SERIAL NO. WHERE SHOWN.

ITEM NO.	QTY	PART NO.	DESCRIPTION

PART LIST

UNITS ARE millimeters

TOLERANCES ARE: *
DECIMALS: X ±0.5, .X ±0.1, .XX ±0.05
ANGLES: ±0.5°
MACHINED: 63
* unless otherwise noted

MATERIAL: ALUM ALLOY 6082
SCALE: 1.000

APPROVALS	DATE
DRAWN	
CHECKED	
ENGINEER	

NATIONAL HIGHWAY TRAFFIC SAFETY ADMINISTRATION

SHOULDER TOP PLATE

SIZE	SHEET	DRAWING NUMBER	REV.
A2	1 OF 1	175-3008	A

REVISION RECORD			
REV.	DESCRIPTION	DATE	BY
A	NHTSA PART 572 NPRM RELEASE	7/30/04	DW

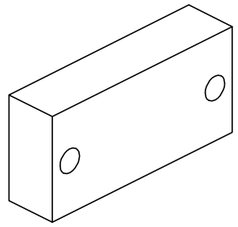

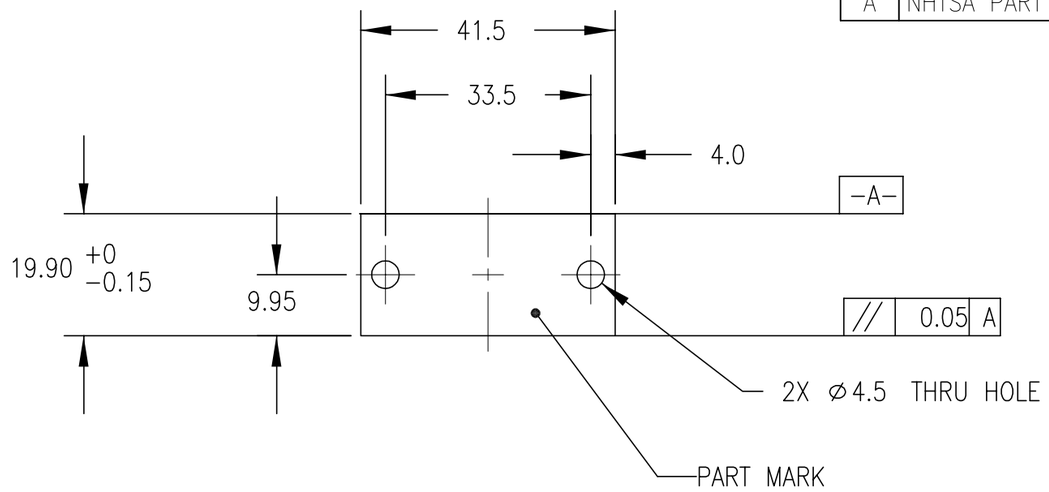

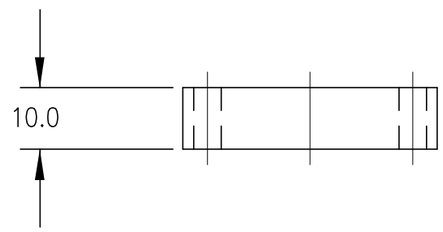

NOTES:

1. SURFACE FINISH TO BE 0.8 OR BETTER ALL OVER UNLESS OTHERWISE STATED.
2. REMOVE ALL BURRS AND BREAK SHARP EDGES.
3. PART MARK WITH INDELIBLE PEN '175-3009' FOLLOWED BY SERIAL NO. WHERE SHOWN.

ITEM NO.	QTY	PART NO.	DESCRIPTION

PART LIST

UNITS ARE millimeters

TOLERANCES ARE: *

DECIMALS:
X ±0.5
.X ±0.1
.XX ±0.05

ANGLES: ±0.5°

MACHINED: 63

* unless otherwise noted

MATERIAL: POLYPROPYLENE (WHITE)

SCALE: 1.000

APPROVALS	DATE
DRAWN	
CHECKED	
ENGINEER	

NATIONAL HIGHWAY TRAFFIC SAFETY ADMINISTRATION

CAM STOP BLOCK

SIZE	SHEET	DRAWING NUMBER	REV.
A3	1 OF 1	175-3009	A

REVISION RECORD			
REV.	DESCRIPTION	DATE	BY
A	NHTSA PART 572 NPRM RELEASE	7/30/04	DW

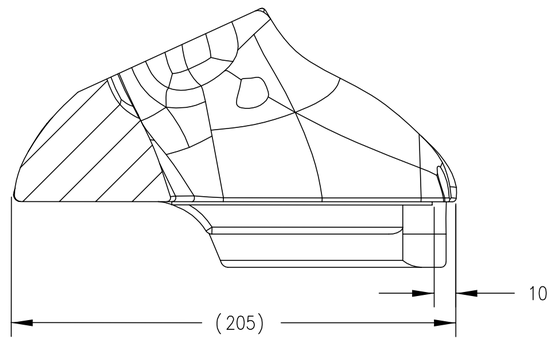

SECTION A-A

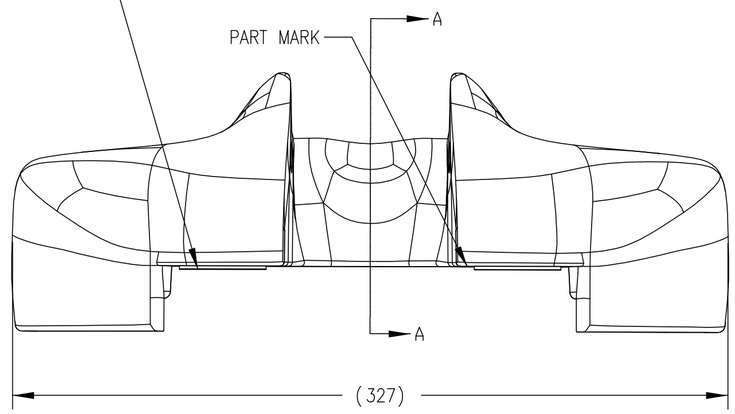

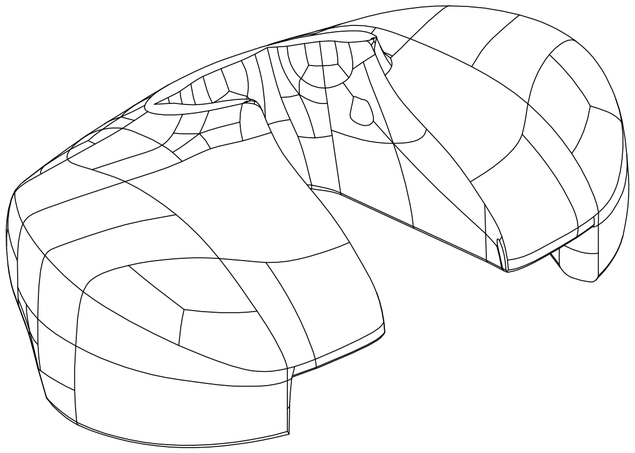

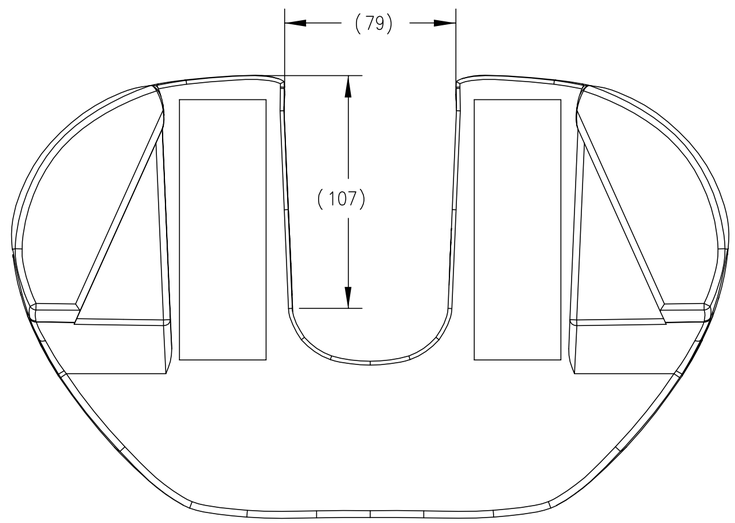

NOTES:

1. REMOVE SELF ADHESIVE BACKING FROM VELCRO HOOKS AND FASTEN ON REINFORCEMENT ON UNDERSIDE, 2 PLACES JOIN VELCRO TOGETHER. DO NOT REMOVE BACKING FROM EYE STRIP.
2. PVC PAINT. AFTER PAINTING ENSURE NO EXCESSIVE AIR POCKETS EXIST IN CORNERS.
3. PART MARK WITH ENDELIBLE PEN '175-3010' FOLLOWED BY SERIAL NO. WHERE SHOWN.
4. TOLERANCE OF +/- 3 MM APPLIED TO ALL DIMENSIONS

ITEM NO.	QTY	PART NO.	DESCRIPTION

PART LIST

UNITS ARE millimeters

TOLERANCES ARE: *

DECIMALS:
X ±0.5
.X ±0.1
.XX ±0.05

ANGLES: ±0.5°

MACHINED: 63

* unless otherwise noted

MATERIAL: PU FOAM

SCALE: 0.500

APPROVALS	DATE
DRAWN	
CHECKED	
ENGINEER	

NATIONAL HIGHWAY TRAFFIC SAFETY ADMINISTRATION

SHOULDER FOAM PAD

SIZE	SHEET	DRAWING NUMBER	REV.
A2	1 OF 1	175-3010	A

REVISION RECORD			
REV.	DESCRIPTION	DATE	BY
A	NHTSA PART 572 NPRM RELEASE	7/30/04	DW

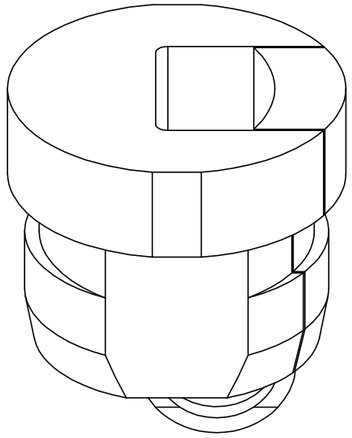

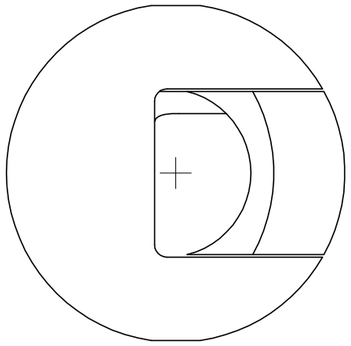

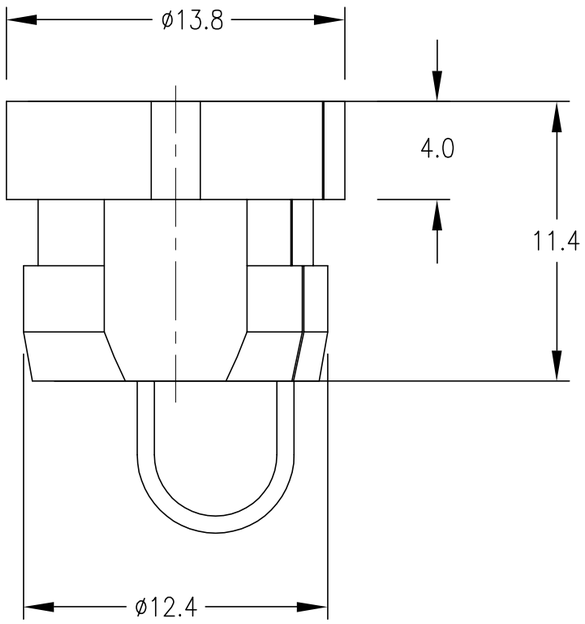

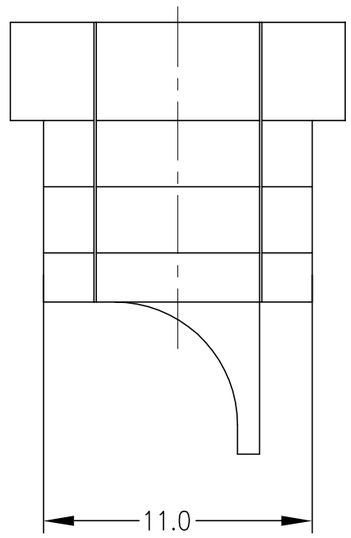

ITEM NO.	QTY	PART NO.	DESCRIPTION

PART LIST

UNITS ARE millimeters

TOLERANCES ARE: *

DECIMALS:
X ±0.5
.X ±0.1
.XX ±0.05

ANGLES: ±0.5°

MACHINED: 63

* unless otherwise noted

MATERIAL: NYLON 66, BLACK

SCALE: 4.000

APPROVALS	DATE
DRAWN	
CHECKED	
ENGINEER	

NATIONAL HIGHWAY TRAFFIC SAFETY ADMINISTRATION

BUSHING

SIZE	SHEET	DRAWING NUMBER	REV.
A3	1 OF 1	9002370	A

REVISION RECORD			
REV.	DESCRIPTION	DATE	BY
A	NHTSA PART 572 NPRM RELEASE	7/30/04	DW

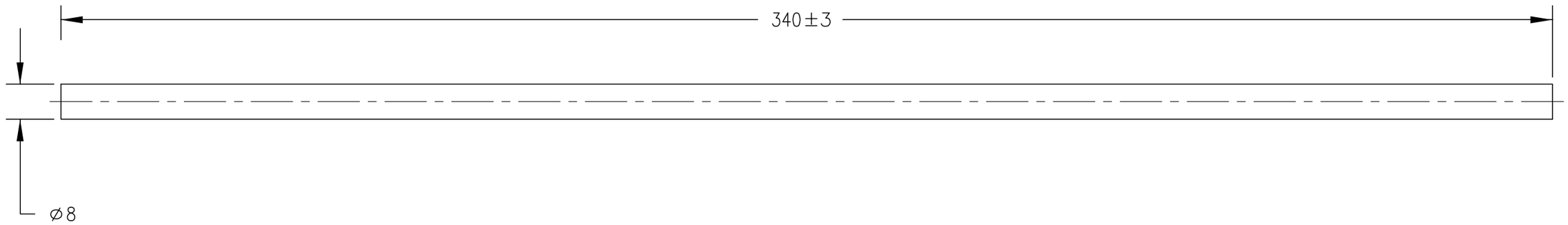

ITEM NO.	QTY	PART NO.	DESCRIPTION

PART LIST

UNITS ARE millimeters

TOLERANCES ARE: *

DECIMALS:
X ±0.5
.X ±0.1
.XX ±0.05

ANGLES: ±0.5°

MACHINED: 63

* unless otherwise noted

MATERIAL: BUNGEE CORD

SCALE: 1.000

APPROVALS	DATE
DRAWN	
CHECKED	
ENGINEER	

NATIONAL HIGHWAY TRAFFIC SAFETY ADMINISTRATION

BUNGEE CORD

SIZE	SHEET	DRAWING NUMBER	REV.
A3	1 OF 1	175-3015	A

REVISION RECORD			
REV.	DESCRIPTION	DATE	BY
A	NHTSA PART 572 NPRM RELEASE	7/30/04	DW

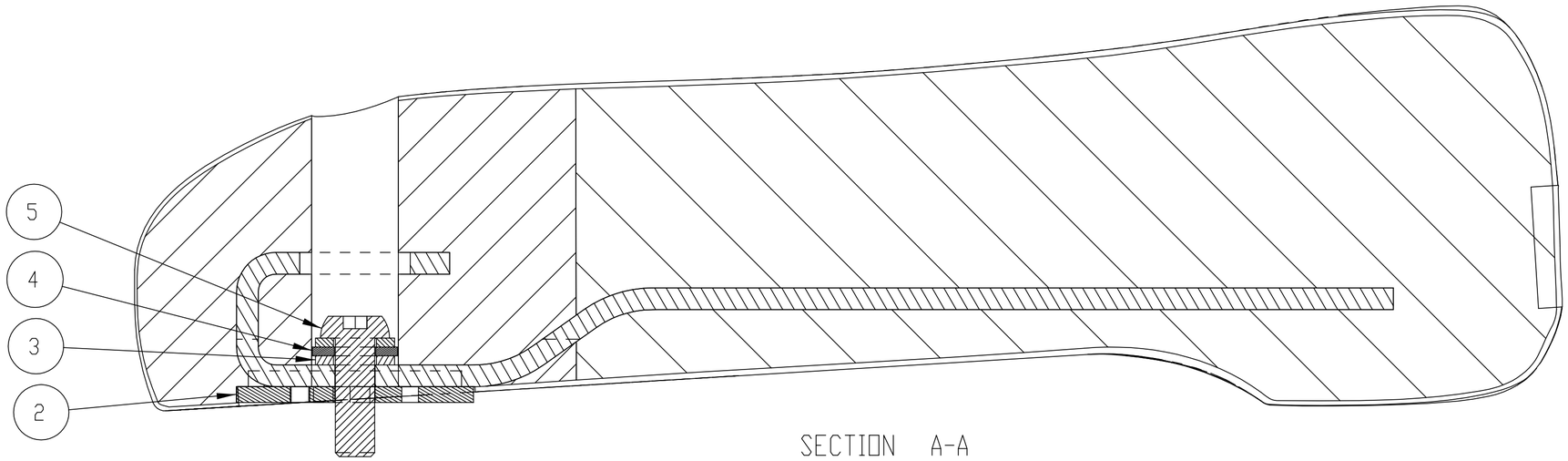

SECTION A-A

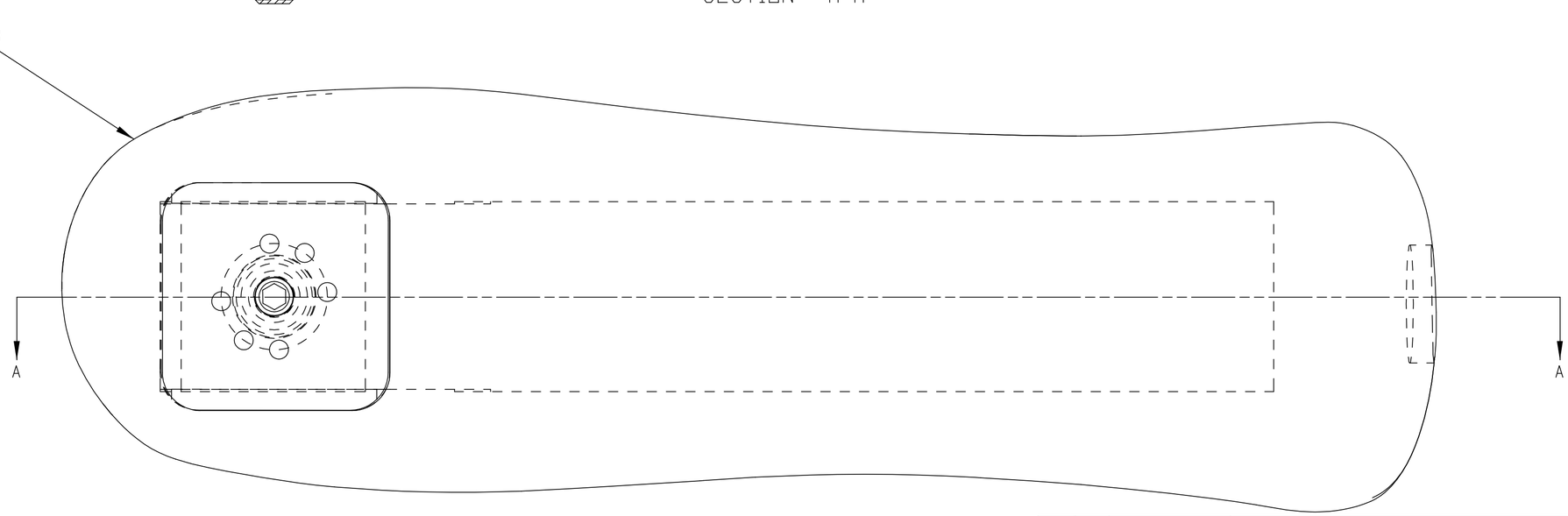

ITEM NO.	QTY	PART NO.	DESCRIPTION
5	1	5000040	SCREW, BHCS M10 X 1.5 X 30
4	1	5000104	THRUST BEARING 10.5 ID
3	2	5000105	WASHER, FLAT M10 (10.85 I.D. X 20 O.D. X 2.3 THICK)
2	1	175-3502	PIVOT STOP PLATE, LEFT
1	1	175-3501	ARM FLESH ASSEMBLY LEFT/RIGHT

PART LIST

UNITS ARE millimeters

TOLERANCES ARE: *

DECIMALS:
X ±0.5
.X ±0.1
.XX ±0.05

ANGLES: ±0.5°

MACHINED: 63

* unless otherwise noted

MATERIAL

SCALE 1.000

APPROVALS	DATE
DRAWN	
CHECKED	
ENGINEER	

NATIONAL HIGHWAY TRAFFIC SAFETY ADMINISTRATION

ARM ASSEMBLY, LEFT

SIZE	SHEET	DRAWING NUMBER	REV.
A2	1 OF 1	175-3500	A

REVISION RECORD			
REV.	DESCRIPTION	DATE	BY
A	NHTSA PART 572 NPRM RELEASE	7/30/04	DW

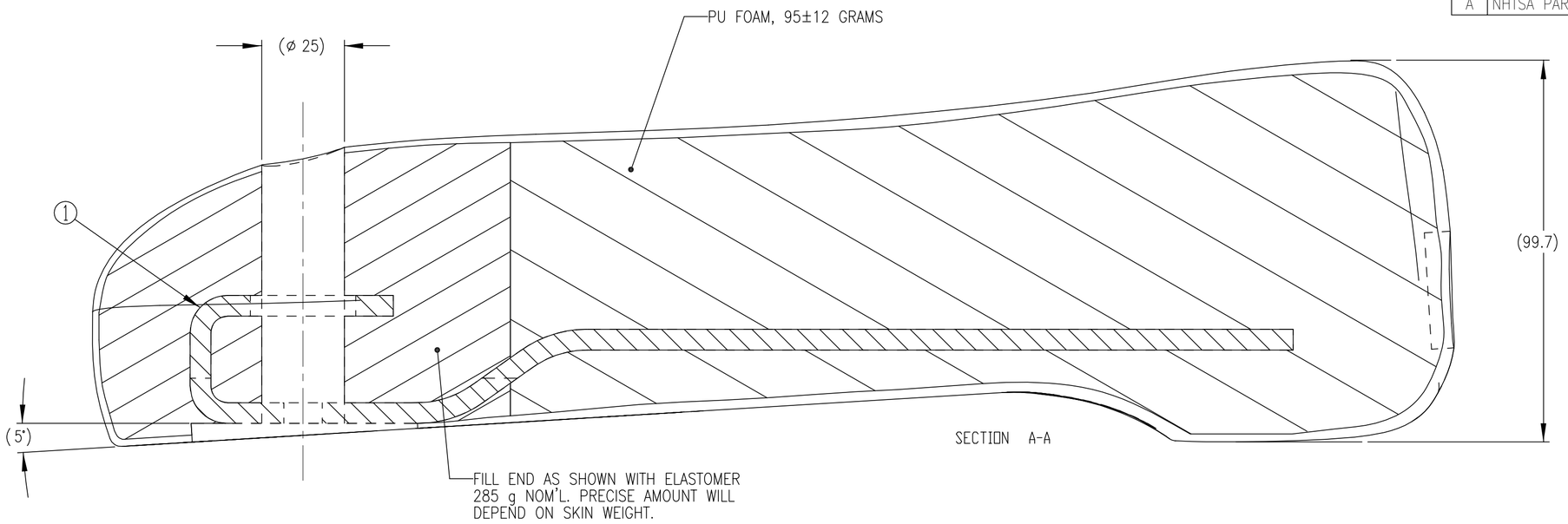

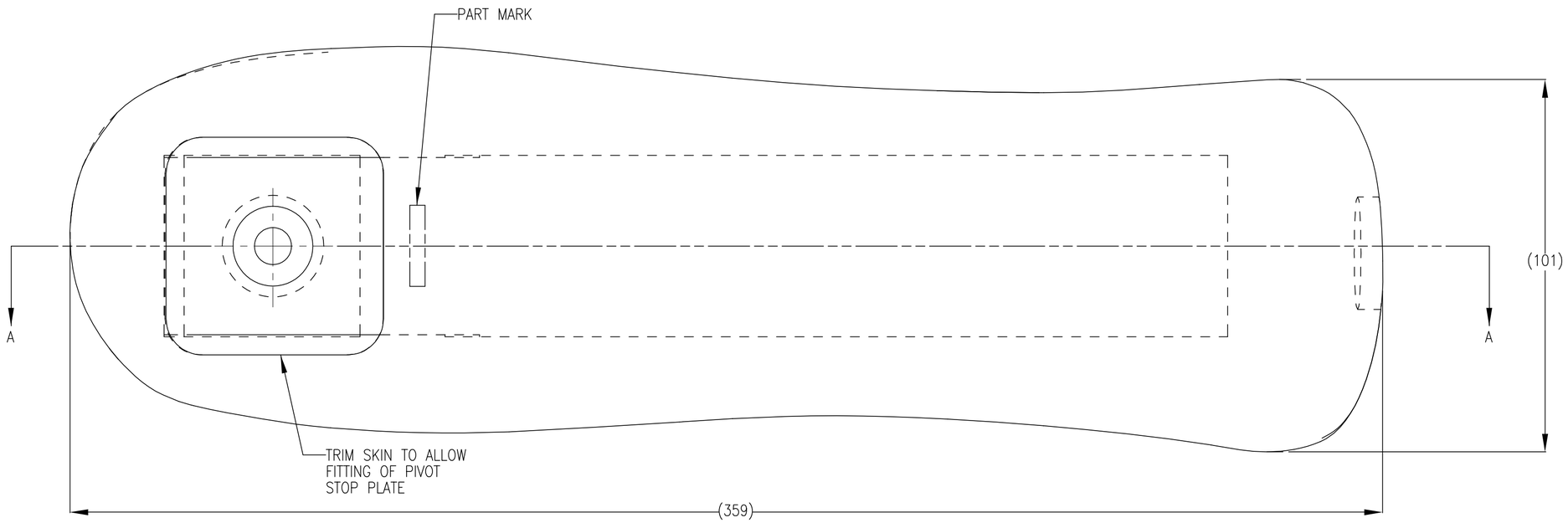

NOTES:

1. R.H. ARM MOULDING IS THE SAME AS L.H.
2. SET ARMATURE INSIDE ARM BEFORE FILLING TOOLING TO SET POSITION.
3. PART MARK WITH BLACK INDELIBLE PEN '175-3501' & SERIAL NO. WHERE SHOWN.
4. TOLERANCE OF +/- 3 MM APPLIED TO ALL DIMENSIONS.

ITEM NO.	QTY	PART NO.	DESCRIPTION
1	1	175-3510	UPPER ARM ARMATURE

PART LIST

UNITS ARE millimeters

TOLERANCES ARE: *

DECIMALS:
X ±0.5
.X ±0.1
.XX ±0.05

ANGLES: ±0.5°

MACHINED: 63

* unless otherwise noted

MATERIAL

SCALE 1.000

APPROVALS	DATE
DRAWN	
CHECKED	
ENGINEER	

NATIONAL HIGHWAY TRAFFIC SAFETY ADMINISTRATION

ARM FLESH ASSEMBLY

LEFT/RIGHT

SIZE	SHEET	DRAWING NUMBER	REV.
A2	1 OF 1	175-3501	A

REVISION RECORD			
REV.	DESCRIPTION	DATE	BY
A	NHTSA PART 572 NPRM RELEASE	7/30/04	DW

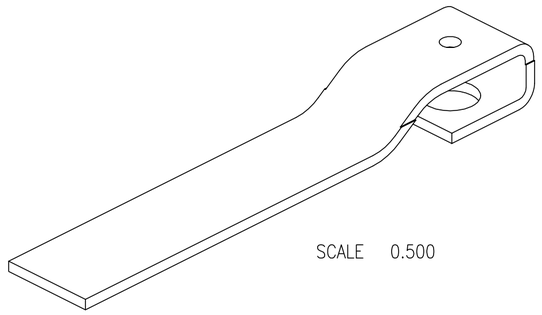

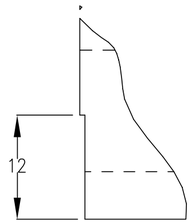

DETAIL Z
SCALE 2.00

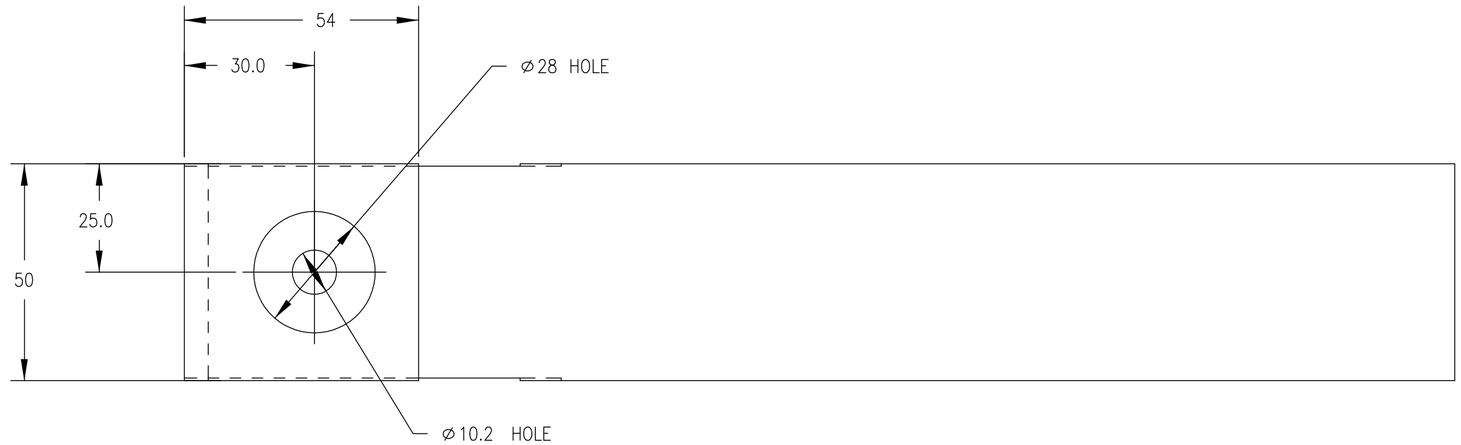

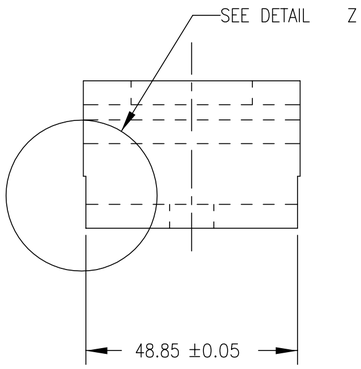

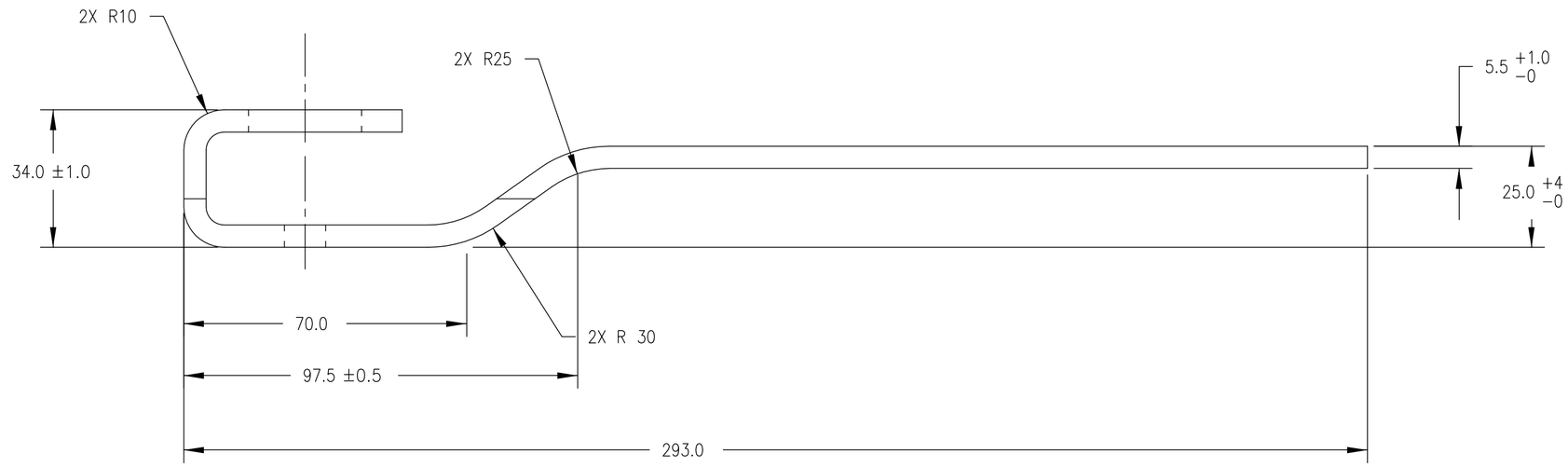

NOTES:

1. REMOVE ALL BURRS AND BREAK ALL SHARP EDGES

ITEM NO.	QTY	PART NO.	DESCRIPTION

PART LIST

UNITS ARE millimeters

TOLERANCES ARE: *

DECIMALS:
X ±0.5
.X ±0.1
.XX ±0.05

ANGLES: ±0.5°

MACHINED: 63

* unless otherwise noted

MATERIAL: POLYPROPYLENE (NATURAL)

SCALE: 1.000

APPROVALS	DATE
DRAWN	
CHECKED	
ENGINEER	

NATIONAL HIGHWAY TRAFFIC SAFETY ADMINISTRATION

UPPER ARM ARMATURE

SIZE	SHEET	DRAWING NUMBER	REV.
A2	1 OF 1	175-3510	A

REVISION RECORD			
REV.	DESCRIPTION	DATE	BY
A	NHTSA PART 572 NPRM RELEASE	7/30/04	DW

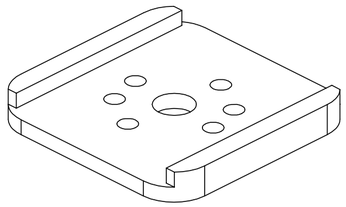

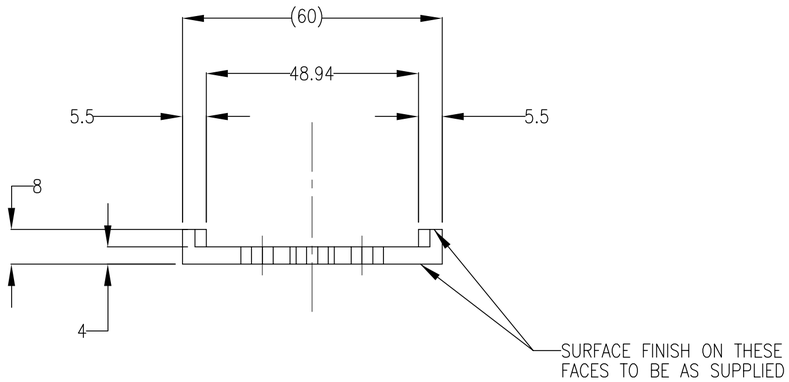

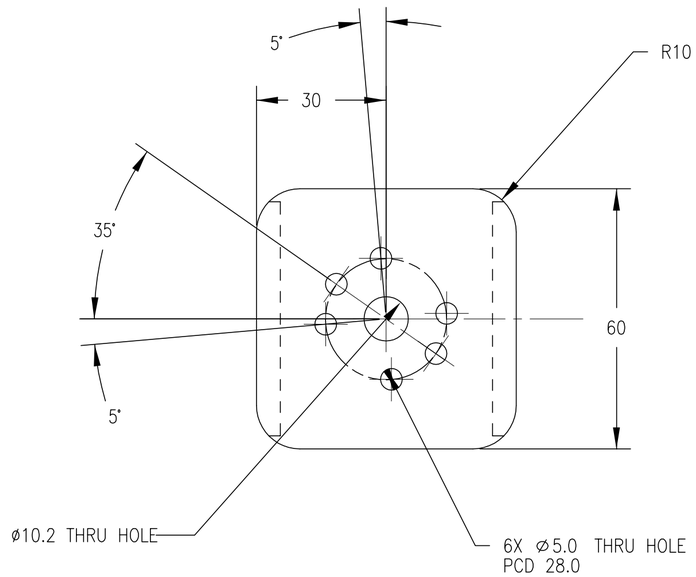

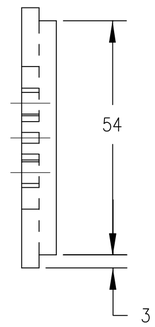

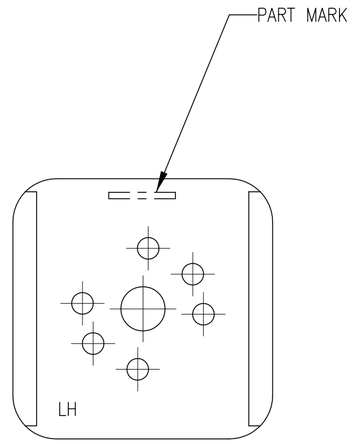

NOTES:

1. MACHINED SURFACE FINISH TO BE 0.8 ✓ OR BETTER.
2. REMOVE ALL BURRS AND SHARP EDGES.
3. SURFACES TO BE FREE FROM SCRATCHES AND INDENTATIONS.
4. PART MARK WITH BLACK INDELIBLE PEN "175-3502"& SERIAL NO. ALSO WRITE "LH" WHERE SHOWN.

ITEM NO.	QTY	PART NO.	DESCRIPTION

PART LIST

UNITS ARE millimeters

TOLERANCES ARE: *

DECIMALS:
X ±0.5
.X ±0.1
.XX ±0.05

ANGLES: ±0.5°

MACHINED: 63 ✓

* unless otherwise noted

MATERIAL: POLYCARBONATE

SCALE: 1.000

APPROVALS	DATE
DRAWN	
CHECKED	
ENGINEER	

NATIONAL HIGHWAY TRAFFIC SAFETY ADMINISTRATION

PIVOT STOP PLATE, LEFT

SIZE	SHEET	DRAWING NUMBER	REV.
A2	1 OF 1	175-3502	A

REVISION RECORD			
REV.	DESCRIPTION	DATE	BY
A	NHTSA PART 572 NPRM RELEASE	7/30/04	DW

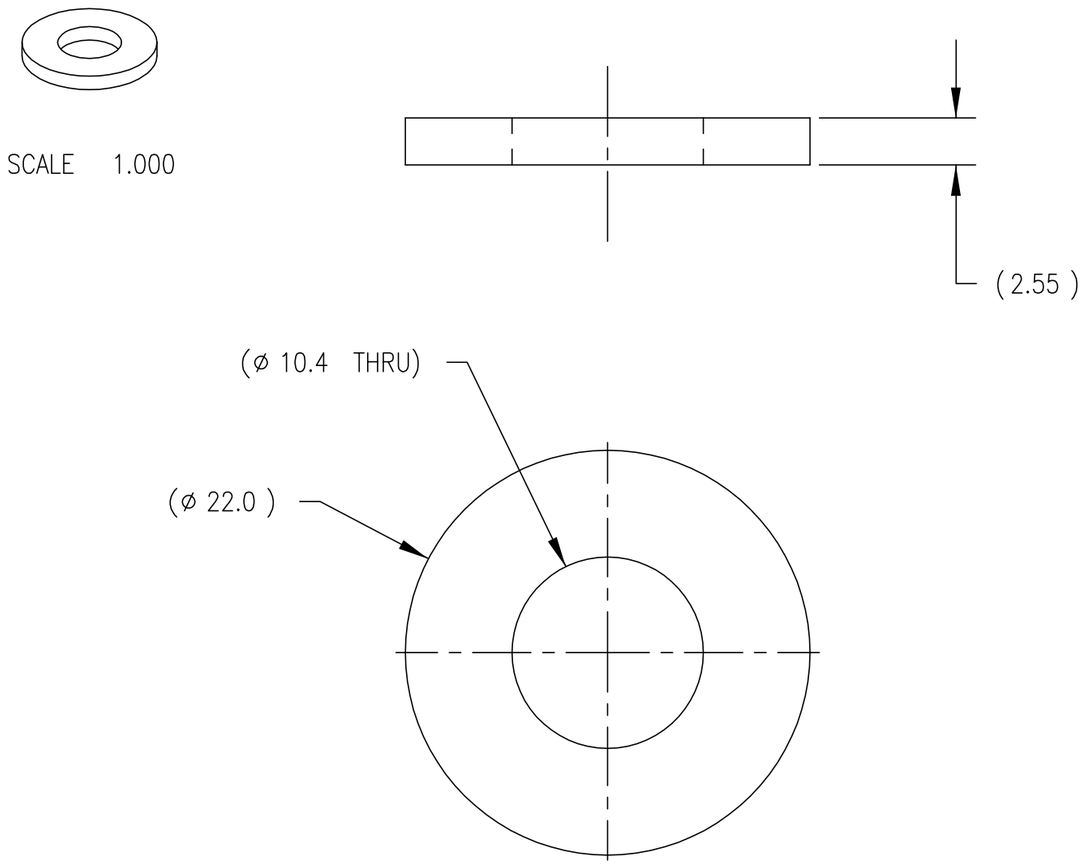

NOTES:

1. PURCHASED PART, (STEEL)

ITEM NO.	QTY	PART NO.	DESCRIPTION

PART LIST

UNITS ARE millimeters

TOLERANCES ARE: *

DECIMALS:
X ±0.5
.X ±0.1
.XX ±0.05

ANGLES: ±0.5°

MACHINED: 63

* unless otherwise noted

MATERIAL: STEEL

SCALE: 3.000

APPROVALS	DATE
DRAWN	
CHECKED	
ENGINEER	

NATIONAL HIGHWAY TRAFFIC SAFETY ADMINISTRATION

BEARING, THRUST 10.5 ID

SIZE	SHEET	DRAWING NUMBER	REV.
A3	1 OF 1	5000104	A

REVISION RECORD			
REV.	DESCRIPTION	DATE	BY
A	NHTSA PART 572 NPRM RELEASE	7/30/04	DW

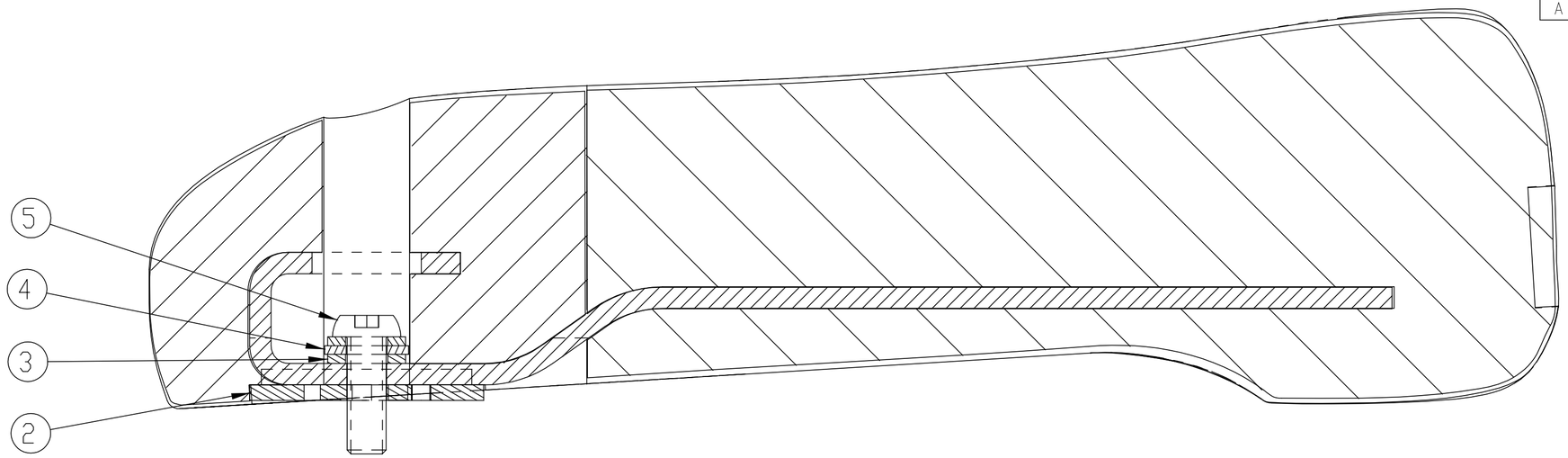

SECTION A–A

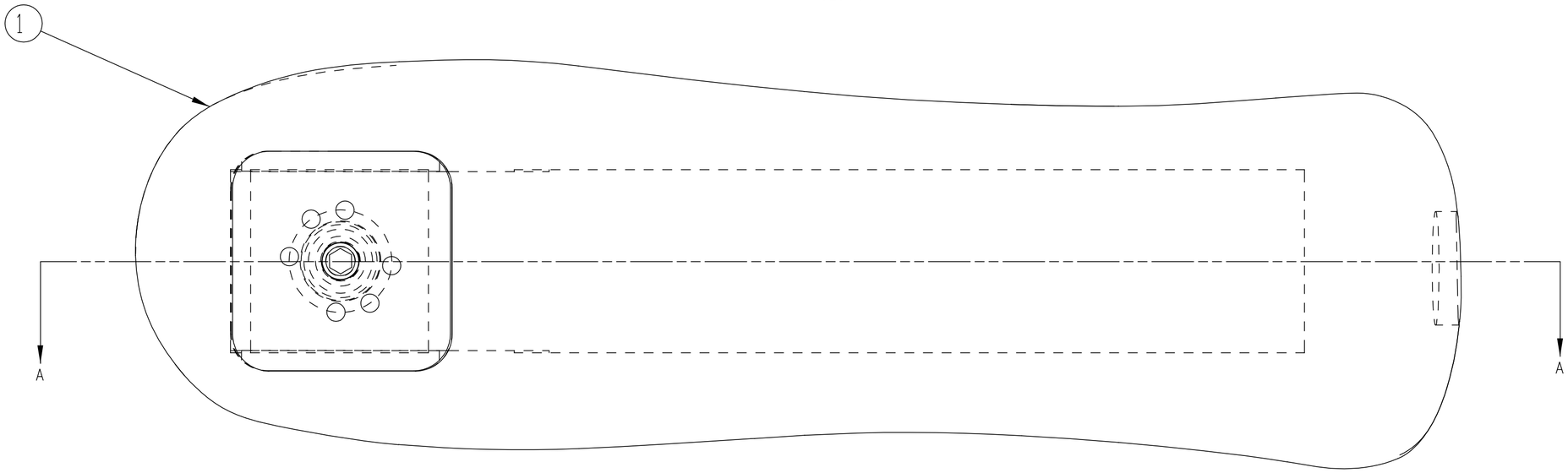

ITEM NO.	QTY	PART NO.	DESCRIPTION
5	1	5000040	SCREW, BHCS M10 X 1.5 X 30
4	1	5000104	BEARING, THRUST 10.5 ID
3	2	5000105	WASHER, FLAT M10 (10.85 ID X 20 0 D X 2.3 THICK)
2	1	175–3503	PIVOT STOP PLATE, RIGHT
1	1	175–3501	ARM FLESH ASSEMBLY LEFT/RIGHT

PART LIST

UNITS ARE millimeters

TOLERANCES ARE: *

DECIMALS:
X ±0.5
.X ±0.1
.XX ±0.05

ANGLES: ±0.5°

MACHINED: 63

* unless otherwise noted

MATERIAL

SCALE 1.000

APPROVALS	DATE
DRAWN	
CHECKED	
ENGINEER	

NATIONAL HIGHWAY TRAFFIC SAFETY ADMINISTRATION

ARM ASSEMBLY, RIGHT

SIZE	SHEET	DRAWING NUMBER	REV.
A2	1 OF 1	175–3800	A

REVISION RECORD			
REV.	DESCRIPTION	DATE	BY
A	NHTSA PART 572 NPRM RELEASE	7/30/04	DW

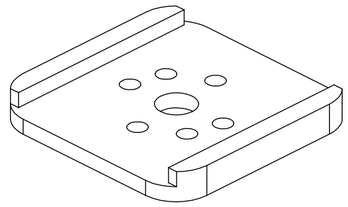

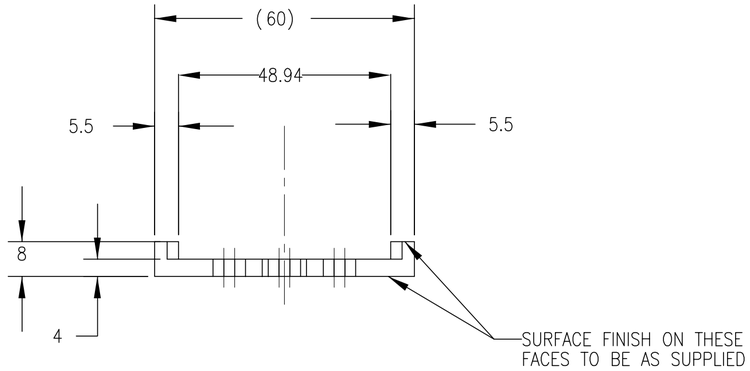

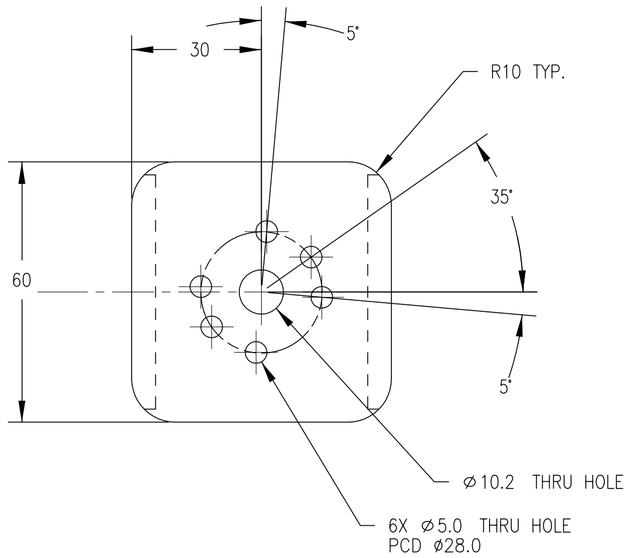

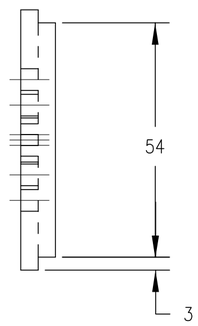

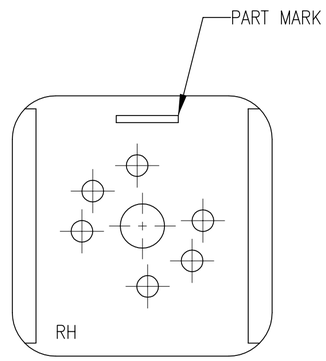

NOTES:

1. MACHINED SURFACE FINISH TO BE 0.8 OR BETTER
2. REMOVE ALL BURRS AND SHARP EDGES.
3. SURFACES TO BE FREE FROM SCRATCHES AND INDENTATIONS.
4. PARK MARK WITH BLACK INDELIBLE PEN "175-3503" & SERIAL NO. ALSO MARK "RH" WHERE SHOWN.

ITEM NO.	QTY	PART NO.	DESCRIPTION

PART LIST

UNITS ARE millimeters

TOLERANCES ARE: *

DECIMALS:
X ±0.5
.X ±0.1
.XX ±0.05

ANGLES: ±0.5°

MACHINED: 63

* unless otherwise noted

MATERIAL: POLYCARBONATE

SCALE: 1.000

APPROVALS	DATE
DRAWN	
CHECKED	
ENGINEER	

NATIONAL HIGHWAY TRAFFIC SAFETY ADMINISTRATION

PIVOT STOP PLATE, RIGHT

SIZE	SHEET	DRAWING NUMBER	REV.
A2	1 OF 1	175-3503	A