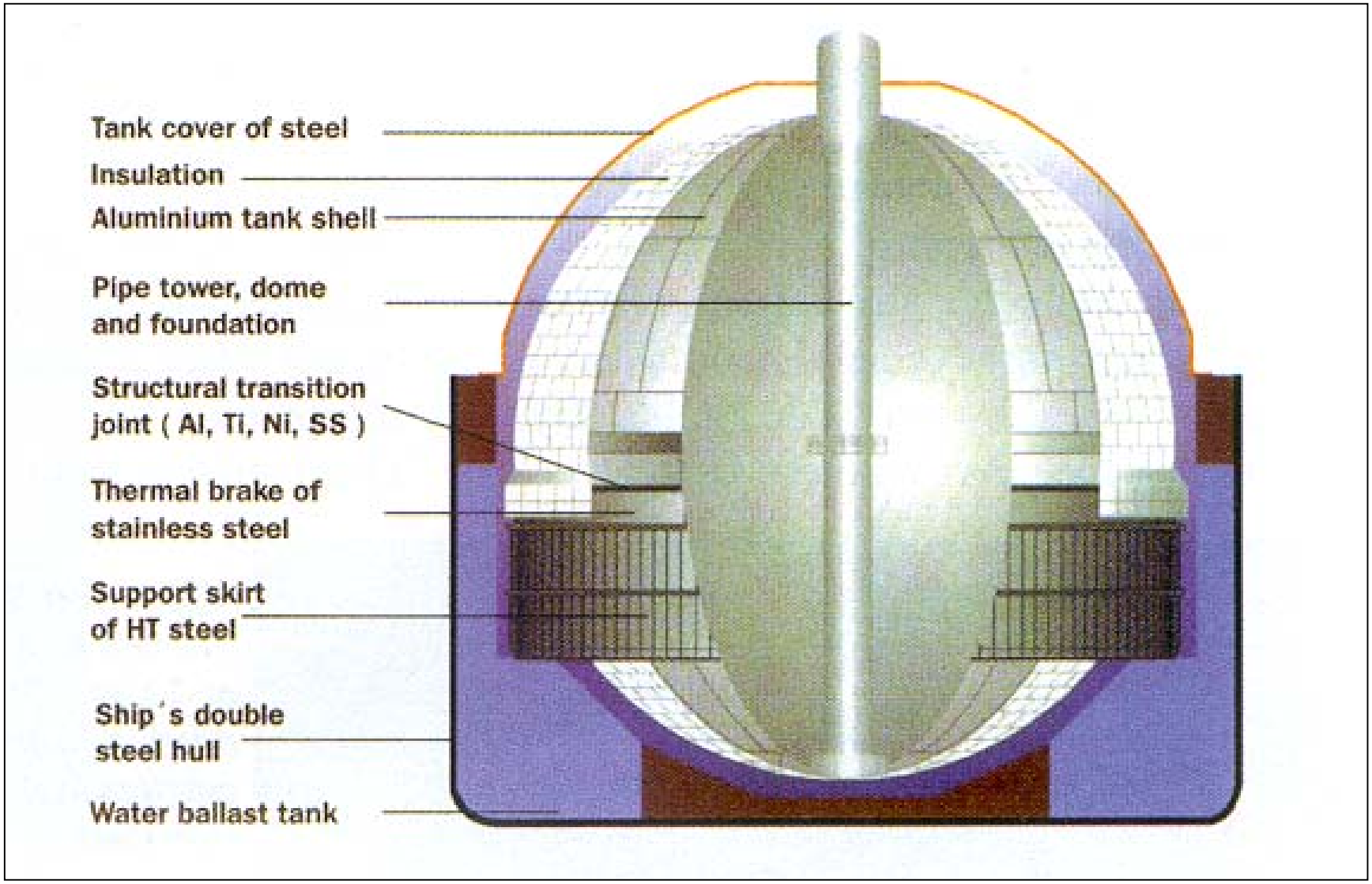

Figure 3.3-8 Moss Storage Tank Cross Section