U.S. Department of Transportation

Federal Aviation Administration

Advisory Circular

Subject: DEVELOPMENT AND IMPLEMENTATION OF CORROSION PREVENTION AND CONTROL PROGRAMS

Date: X/XX/02
Initiated by: AFS-300

AC No: 120-CPCP
Change:

1. PURPOSE. This advisory circular (AC) provides guidance on the development and implementation of Corrosion Prevention and Control Programs (CPCP). It is one method of compliance with the CPCP requirements of Title 14 of the Code of Federal Regulations (14 CFR). Instead of following this method, the applicant may elect to follow an alternate method, provided the alternate method is acceptable to the Federal Aviation Administration (FAA). Because the method of compliance presented in this AC is not mandatory, the term "should" used herein applies only to an applicant who chooses to follow this particular method without deviation.

2. APPLICABILITY. This AC applies to operators who are developing and implementing a CPCP for airplanes operated under 14 CFR parts 121 and 129 and for multi-engine airplanes used in scheduled operations under 14 CFR part 135.

3. RELATED REFERENCES. Sections of 14 CFR parts 21, 23, 25, 27, 29, 91, 121, 129, and 135 that prescribe design substantiation and operational approval requirements that are directly applicable to the CPCP are listed here.

a. Section 21.50, Instructions for continued airworthiness and manufacturer's maintenance manuals having airworthiness limitations sections.

b. Section 23.1529, Instructions for continued airworthiness.

c. Section 25.1529, Instructions for continued airworthiness.

4. RELATED READING MATERIAL. The following publications contain information that may be useful in developing and implementing a CPCP:

a. FAA Order 8300.12, Corrosion Prevention and Control Programs.

b. AC 43-4A, Corrosion Control for Aircraft.

c. The latest revisions of Airworthiness Directives (ADs) requiring CPCP (e.g., AD 90-25-01, 90-25-03, 90-25-05, 90-25-07, 92-22-07, 92-22-08R1, 92-22-09R1, 93-02-14, 93-20-03, 94-05-02, 94-15-11, 94-18-02, 95-14-05, 95-21-07, and 92-25-13).

5. DEFINITIONS. The following definitions apply when these terms appear in the rule or this AC:

a. Allowable Limit. The allowable limit is the maximum amount of material (usually expressed in material thickness) that may be removed or blended out without affecting the ultimate design strength capability of the structural member. Allowable limits may be established by the design approval holder. The FAA may also establish allowable limits. The design approval holder normally publishes allowable limits in the Structural Repair Manual or in Service Bulletins.

b. Baseline Program. A baseline program is a CPCP developed for a specific model airplane. The Design Approval Holder typically develops the baseline program. However, it may be developed by a group of operators who intend to use it in developing their individual CPCP. It contains the corrosion inspection tasks, an implementation threshold, and a repeat interval for task accomplishment in each area or zone.

c. Basic Task(s). The basic task is a specific and fundamental set of work elements that should be performed repetitively in all task areas or zones to successfully control corrosion. The contents of the basic task may vary depending upon the specific requirements in an airplane area or zone. The basic task is developed to protect the primary structure of the airplane.

d. Corrosion Prevention and Control Program (CPCP). A Corrosion Prevention and Control Program is a comprehensive and systematic approach to controlling corrosion such that the load carrying capability of an airplane structure is not degraded below a level necessary to maintain airworthiness. It contains the basic corrosion inspection tasks, a definition of corrosion levels, implementation thresholds, a repeat interval for task accomplishment in each area or zone, and specific procedures if corrosion damage exceeds Level 1 in any area or zone.

> **NOTE: In the past, CPCPs have been developed by the design approval holder with the assistance of aircraft operators and regulatory authorities. They relied heavily on service experience to establish CPCP implementation thresholds and repeat intervals. Since that time, a logical evaluation process has been developed to ensure environmental damage is considered in the evaluation of aircraft structure. This process is identified in Maintenance Program Development Document MSG-3. The FAA will accept a CPCP based on this document and the information in this AC. The FAA will also accept other CPCPs that follow the guidelines in this AC.**

e. Design Approval Holder. The design approval holder is either the type certificate holder for the aircraft or the supplemental type certificate holder.

f. Implementation Threshold (IT). The implementation threshold for a specific airplane is the date, based on that airplane's age, by which the initial corrosion inspection task should be accomplished in an area or zone.

g. Level 1 Corrosion. Level 1 corrosion is one or more of the following:

(1) Corrosion occurring between successive corrosion inspection tasks that is local and can be reworked or blended out within the allowable limit;

(2) Local corrosion damage that exceeds the allowable limit but can be attributed to an event not typical of the operator's usage of other airplanes in the same fleet (e.g., mercury spill); or

(3) Operator experience has demonstrated only light corrosion between each successive corrosion task inspection; the latest corrosion inspection task results in rework or blend out that exceeds the allowable limit.

h. Level 2 Corrosion. Level 2 corrosion occurs between any two successive corrosion inspection tasks that requires a single rework or blend-out that exceeds the allowable limit. A finding of Level 2 corrosion requires repair, reinforcement, or complete or partial replacement of the applicable structure.

> **NOTE: A statement of fact in previously mandated CPCPs states: corrosion findings that were discovered during the corrosion inspection task, accomplished at the implementation threshold, and which require repair, reinforcement, or complete or partial replacement of the applicable structure should not be used as an indicator of the effectiveness of the operator's CPCP. The argument is that an operator's corrosion program effectiveness can be determined only after a repeat inspection has been performed in a given inspection task area. This argument is valid for aircraft with mandated CPCPs introduced after the aircraft has been in service for a number of years without a CPCP. This argument, however, may not be valid for aircraft that have been maintained using a design approval holder's CPCP. Consequently, corrosion findings exceeding Level 1 found on the corrosion inspection task implementation threshold may have been set too high by the design approval holder and action should be taken to readjust the implementation threshold.**

i. Level 3 Corrosion. Level 3 corrosion occurs during the first or subsequent accomplishments of a corrosion inspection task that the operator determines to be an urgent airworthiness concern.

> **NOTE: If Level 3 corrosion is determined at the implementation threshold or any repeat inspection, it should be reported. Any corrosion that is more than the maximum acceptable to the design approval holder or the FAA must be reported in accordance with current regulations. This determination should be conducted jointly with the design approval holder.**

j. Light Corrosion. Light corrosion is corrosion damage so slight that removal and blend-out over multiple repeat intervals (RI) may be accomplished before material loss exceeds the allowable limit.

k. Local Corrosion. Generally, local corrosion is corrosion of a skin or web (wing, fuselage, empennage, or strut) that does not exceed one frame, stringer, or stiffener bay. Local corrosion is typically limited to a single frame, chord, stringer, or stiffener, or the corrosion of more than one frame, chord, stringer, or stiffener where no corrosion exists on two adjacent members on each side of the corroded member.

l. Repeat Interval (RI). The repeat interval is the calendar time between the accomplishment of successive corrosion inspection tasks for a Task Area or Zone.

m. Task Area. The task area is a region of airplane structure to which one or more corrosion inspection tasks are assigned. The task area may also be referred to as a Zone.

n. Urgent Airworthiness Concern. An urgent airworthiness concern is damage that could jeopardize continued safe operation of any airplane. An urgent airworthiness concern typically requires correction before the next flight and expeditious action to inspect the other airplanes in the operator's fleet.

o. Widespread Corrosion. Widespread corrosion is corrosion of two or more adjacent skin or web bays (a web bay is defined by frame, stringer, or stiffener spacing). Or, widespread corrosion is corrosion of two or more adjacent frames, chords, stringers, or stiffeners. Or, widespread corrosion is corrosion of a frame, chord, stringer, or stiffener and an adjacent skin or web bay.

p. Zone. See Task Area.

James J. Ballough
Director, Flight Standards Service

CHAPTER 1. GENERAL

1-1. CORROSION PREVENTION AND CONTROL PROGRAMS. A corrosion prevention and control program (CPCP) is a systematic approach to controlling corrosion in an airplane's primary structure. The objective of a CPCP is to limit material loss due to corrosion to a level necessary to maintain airworthiness. A CPCP consists of a basic corrosion inspection task, task areas, defined corrosion levels, and compliance times (implementation thresholds and repeat intervals). The CPCP also includes procedures to notify the Federal Aviation Administration (FAA) of the findings and data associated with Level 2 and Level 3 corrosion and the actions taken to reduce future findings to Level 1.

1-2. DESIGN APPROVAL HOLDER-DEVELOPED BASELINE PROGRAM. As part of the instructions for continued airworthiness (ICA), the design approval holder should provide an inspection program that includes the frequency and extent of inspections necessary to ensure the continued airworthiness of the airplane. Furthermore, the ICA should include the information needed to apply protective treatments to the structure after inspection. In order for the inspections to be effectively accomplished, the design approval holder should include in the ICA corrosion removal and cleaning procedures and allowable limits for material loss. The design approval holder should include all of these corrosion related activities in a manual referred to as the Baseline Program. The Baseline Program manual is intended to facilitate operator development of a systematic and comprehensive CPCP for inclusion in the operator's maintenance program. (See Appendix 1 for typical baseline program manual table of contents.)

1-3. OPERATOR-DEVELOPED PROGRAM. In order to operate an airplane under 14 CFR part 121 or 129, and in order to operate a multi-engine airplane in scheduled service under 14 CFR part 135, an operator should include in its maintenance or inspection program an FAA-approved CPCP. An operator may adopt the baseline program provided by the design approval holder, choose to develop its own CPCP, or be required to develop one if none is available from the design approval holder. In developing their own CPCP, operators may join with other operators and develop a baseline program similar to a design approval holder-developed baseline program for use by all operators in the group. The advantages of an operator-developed baseline program are that it provides a common basis for all operators in the group to develop their CPCP, and it provides a broader experience base for development of the corrosion inspection tasks and identification of the task areas.

1-4. FAA APPROVAL OF A CPCP. Before an operator may include a CPCP in its maintenance or inspection program, the FAA Airworthiness Principal Maintenance Inspector (PMI) should review and approve that CPCP. The PMI review is intended to ensure that the CPCP is comprehensive and systematic. The operator should show the PMI that the CPCP is comprehensive in that it addresses all corrosion likely to affect primary structure.

1-5. THE OPERATOR SHOULD SHOW THE PMI THAT THE CPCP IS SYSTEMATIC IN THAT IT PROVIDES:

a. Step-by-step procedures that are applied on a regular basis to each identified task area or zone; and

b. Adjustment of these procedures when they result in evidence that corrosion is not being controlled to an established acceptable level (Level 1).

CHAPTER 2. DEVELOPMENT OF BASELINE PROGRAM

2-1. BASELINE PROGRAM. The objective of a baseline program is to establish requirements for control of corrosion of airplane structure to Level 1 for the operational life of the airplane. The baseline program should include the basic tasks, implementation thresholds, and repeat intervals. The baseline program should also include procedures to notify the FAA of the findings and data associated with Level 2 and Level 3 corrosion and the actions taken to reduce future findings to Level 1.

a. Baseline Program Considerations. To establish an effective baseline program, consideration of the following is necessary: the flight and maintenance history of the airplane model and perhaps similar models; the corrosion properties of the materials used in the aircraft structure; the protective treatments used; the general practices applied during construction and maintenance; and local and widespread corrosion (see Appendix 2 for local and widespread corrosion example). When determining the details of the corrosion inspection tasks, the implementation thresholds, and the repeat intervals, a realistic operational environment should be considered. Technical representatives of both the design approval holder and the operators should participate in evaluating the service history and operational environment for the airplane model. For new airplane models and for airplane models that have been in operation for only a short time, technical representatives of operators of similar airplane models should be invited to participate.

b. Design Approval Holder-Developed Baseline Program. During the design development process, the design approval holder should provide a baseline program as part of the instructions for continued airworthiness. The design approval holder initially evaluates the service history of corrosion available for airplanes of similar design used in the same operational environment. The design approval holder develops a preliminary baseline program based on this evaluation. The design approval holder then convenes a working group consisting of operator technical representatives and representatives of the participating regulatory authorities. The working group reviews the preliminary baseline program to ensure that the tasks, implementation thresholds, and repeat intervals are practical and ensure the continued airworthiness of the airplane. Once the working group review is complete, the design approval holder incorporates the baseline program into the instructions for continued airworthiness. (See Figure 2-1.)

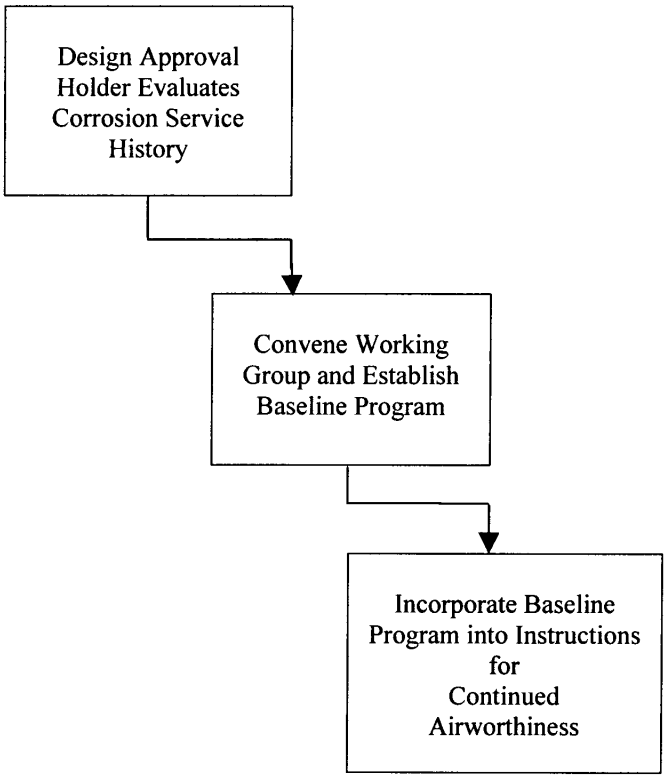

FIGURE 2-1. DESIGN APPROVAL HOLDER-DEVELOPED BASELINE PROGRAM

c. Operator-Developed Program. There may be instances where the design approval holder does not provide a baseline program. In such instances, an operator may develop its CPCP without using a baseline program, as long as the operator-developed CPCP is consistent with the requirements of the corrosion rule. Appendix 3 provides an example of the task areas for a typical commuter airplane. It would be beneficial for an operator developing its own CPCP to consult other operators of the same or similar airplane models in order to broaden the service experience available for use in preparing its program. When a design approval holder-prepared baseline program is unavailable, a group of operators may prepare an operator-developed baseline program from which each operator in the group will develop its own CPCP. (See Figure 2-2.)

(1) Operator-Developed Baseline Program. An operator-developed baseline program should pay particular attention to corrosion prone areas of the airplane, such as:

(a) Exhaust trail areas;

(b) Battery compartments and battery vent openings;

(c) Areas surrounding lavatories, buffets, and galleys;

(d) Bilges;

(e) Fuselage internal lower structure;

(f) Wheel wells and landing gear;

(g) External skin areas;

(h) Water entrapment areas;

(i) Engine frontal areas and cooling air vents;

(j) Electronic or avionics compartments; and

(k) Flight control cavities open during takeoff and landing.

NOTE: CPCPs for large transports were developed based on a triad amongst the FAA, design approval holders, and the operators of the particular model airplane. If the operator(s) were to develop a CPCP, they may want to follow the example of the large transports.

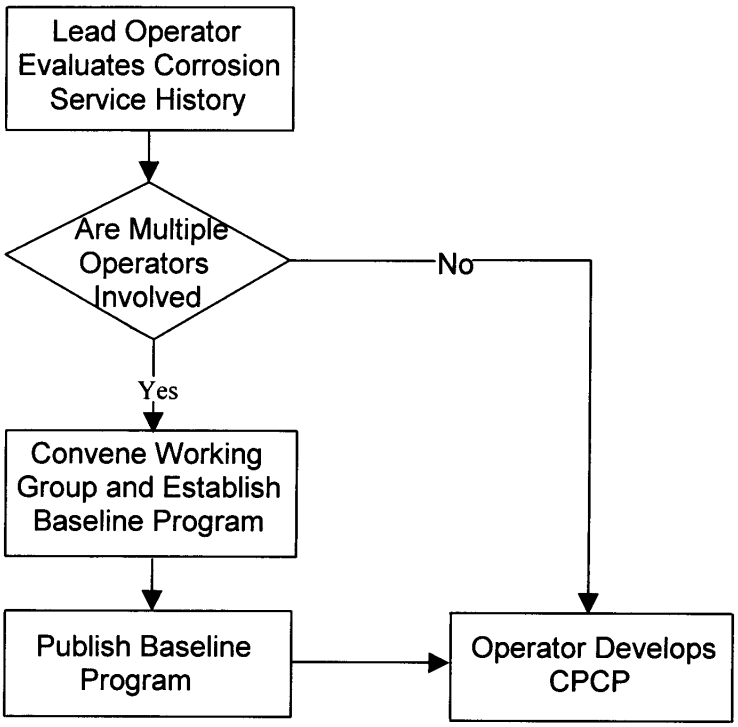

FIGURE 2-2. OPERATOR-DEVELOPED BASELINE PROGRAM

(2) Individual Operator-Developed CPCP. An operator may develop its CPCP without reference to a baseline program, as long as the CPCP is consistent with the requirements of the applicable operating rules. Any operator who develops its own CPCP without a baseline program should review all available corrosion-related service data on the individual airplane model and on like design details in similar airplane models when the operator's data and the FAA Service Difficulty Report (SDR) data shows no entries.

(3) Continuous Analysis and Surveillance. The operator's continuous analysis and surveillance system should contain procedures to review corrosion inspection task findings and establish corrosion levels. These procedures should provide criteria for determining if any finding of corrosion that exceeds allowable limits is an isolated incident not typical of the operator's fleet. The operator's program should also provide for notifying the PMI whenever a determination of Level 2 or Level 3 corrosion is made. Due to the potential urgent airworthiness concern associated with a Level 3 finding, the operator's procedures should provide for PMI notification as soon as possible, but not later than three calendar days after the Level 3 determination has been made.

2-2. BASELINE PROGRAM MANUAL. The baseline program manual should include instructions to implement the baseline CPCP. It may be in a printed form or other form acceptable to the administrator. It should also be in a form that is easy to revise. The date of the last revision should be entered on each page. The baseline program manual should clearly be identified as a baseline CPCP program. The airplane's make and model and the person who prepared the manual should also be identified. (See Appendix 1 for a typical baseline CPCP manual Table of Contents.)

a. Purpose and Background. This section of the manual should state the purpose of the baseline program, which is to establish minimum requirements for preventing and controlling corrosion that may jeopardize the continued airworthiness of the airplane model fleet. The section should further state that an operator should include an effective CPCP in its maintenance or inspection program.

b. Introduction. The introduction should include a general statement that corrosion becomes more widespread as airplanes age, and that it is more likely to occur in conjunction with other damage, such as fatigue cracking. The introduction should also indicate that it is not the intent of a CPCP to establish rigid requirements to eliminate all corrosion in the fleet but to control corrosion at or below levels that do not jeopardize continued airworthiness. Due to the unpredictability of corrosion, it must be removed, the structure repaired, and corrosion prevention treatment reapplied.

c. Program Application. For a program to be fully effective, it is essential that a corrosion inspection task be applied to all areas where corrosion may affect primary structure. This section should recommend that priority for implementing the CPCP be given to older airplanes and to areas requiring significant changes to previous maintenance procedures in order to meet corrosion prevention and control requirements. This section should allow an operator to continue its current corrosion control procedures in a given task area or zone where there is documentation to show that corrosion is being consistently controlled to Level 1.

d. Baseline Program. This section should fully describe the baseline program. It should include the basic tasks, corrosion inspection task areas, implementation thresholds, and repeat intervals.

e. Reporting System. The FAA requires that corrosion that exceeds limits acceptable to the design approval holder or FAA (i.e., exceeds allowable limits) must be reported to the FAA. Therefore, procedures to report findings of Level 2 and Level 3 corrosion to the FAA should be clearly established in this section. All Level 2 and Level 3 findings should be reported in accordance with the applicable airworthiness directive, the operator's service difficulty reporting procedures, or reporting required by other regulatory authorities. Additional procedures for alerting the PMI of Level 3 findings should be established to expedite such reporting. This report to the PMI should be made after the determination of the corrosion level.

f. Periodic Review. This section should establish a time frame for the design approval holder (or lead operator) and participating operators to meet with the FAA and review the reported Level 2 and Level 3 findings to assess the baseline program and make adjustments, if necessary.

g. Corrosion Related ADs. This section should include a list of all airworthiness directives (ADs) that contain requirements related to known corrosion related problems. This section should state that these ADs are in addition to and take precedence over the operator's CPCP.

h. Development of the Baseline Program. This section should identify the actions taken in preparing the baseline program. It should include a description of the participants, the documents reviewed (e.g., service bulletins, service letters, ADs, SDRs, accident and incident reports), and the methodology for selecting and categorizing the corrosion prone areas to be included in the baseline program. Selection criteria for corrosion prone areas should be based on areas having similar corrosion exposure characteristics and inspection access requirements. Some corrosion prone areas that should be considered are the main wing box, the fuselage crown, the bilge, areas under lavatories and galleys, etc. This section should state that the implementation threshold was selected to represent the typical airplane age beyond which an effective corrosion inspection task should be implemented for a given task area.

i. Records to Support CPCP Adjustments. The FAA has not imposed a requirement for additional recordkeeping for an operator's CPCP. However, the operator should maintain adequate records to substantiate any proposed program adjustments. For example, an operator should maintain records to enable the operator to determine the amount of damage that has occurred during the repeat interval for each corrosion inspection task. Such data should be maintained for multiple repeat intervals in order to determine whether the damage remains constant or is increasing or decreasing. Such records are necessary when an operator is seeking approval for interval extension or task reduction.

j. Glossary. This section should define the technical terms used in the baseline manual.

k. Application of the Basic Task. This section should describe in detail the basic task. It should provide procedures describing how to accomplish the following actions:

(1) Removal of all systems equipment and interior furnishings to allow access to the area;

(2) Cleaning of the area as required;

(3) Visual inspection of all task areas and zones listed in the baseline program;

(4) Removal of all corrosion, damage evaluation, and repair of structure as necessary;

(5) Unblocking holes and gaps that may hinder drainage;

(6) Application of corrosion protective compounds; and

(7) Reinstallation of dry insulation blankets, if applicable.

l. Determination of Corrosion Levels Based on Findings. This section should describe how the corrosion level definitions are used in evaluating the corrosion findings and assigning a corrosion level. This section should also instruct the operator to consult the design approval holder or the cognizant aircraft certification office(s) responsible for the design for advice in determining corrosion levels.

m. Typical Actions Following Determination of Corrosion Levels. This section should establish criteria for evaluating whether or not the Level 2 or Level 3 corrosion is occurring on other airplanes in the operator's fleet. Criteria to be considered include: cause of the corrosion problem, past maintenance history, operating environment, production build standard, and years in service. These and any other identified criteria should be used in identifying those airplanes that should be included in a fleet campaign. The results of the fleet campaign should be used to determine necessary adjustments in the operator's CPCP. The following instructions should also be included in this section:

(1) If corrosion exceeding the allowable limit is found during accomplishment of the corrosion inspection task implementation threshold for a task area, it may be necessary to adjust the CPCP (see NOTE under Level 2 corrosion definition);

(2) A single isolated occurrence of corrosion between successive inspections that exceeds Level 1 does not necessarily warrant a change in the operator's CPCP. If the operator experiences multiple occurrences of Level 2 or Level 3 corrosion for a specific task area, then the operator should implement a change to the CPCP;

(3) The operator should not defer maintenance actions for Level 2 and Level 3 corrosion. These maintenance actions should be accomplished in accordance with the operator's maintenance manual; and

(4) The operator may implement changes, such as the following, to improve the program's effectiveness:

(a) Reduction of the repeat interval;

(b) Multiple applications of corrosion treatments;

(c) Additional drainage provisions; and

(d) Incorporation of design approval holder's service information, such as service bulletins and service letters.

n. Program Implementation. This section should state that each task is to be implemented on each airplane when the airplane reaches the age represented by the implementation threshold for the task. It should describe procedures to be used for establishing a schedule for implementation when the airplane age exceeds the implementation threshold for individual tasks. It should also state that once a task is implemented in an area, subsequent tasks are to be accomplished at the repeat interval in that task area.

CHAPTER 3. DEVELOPMENT OF OPERATOR'S PROGRAM

3-1. BASELINE PROGRAM AVAILABLE. If a baseline program is available, the operator should use that baseline program as a basis for developing its CPCP. In addition to adopting the basic task, task areas, implementation thresholds, and repeat intervals of the baseline program, the operator should make provisions for the following:

a. Provisions for Airplanes that have Exceeded the Implementation Threshold. The operator's CPCP must establish a schedule for accomplishing all corrosion inspection tasks in task areas where the airplane age at [enter the effective date of the final corrosion rule] has exceeded the implementation threshold. This schedule must provide for accomplishing the corrosion inspection tasks in these areas prior to [enter the date established in the rule]. (See Figure 3-1.)

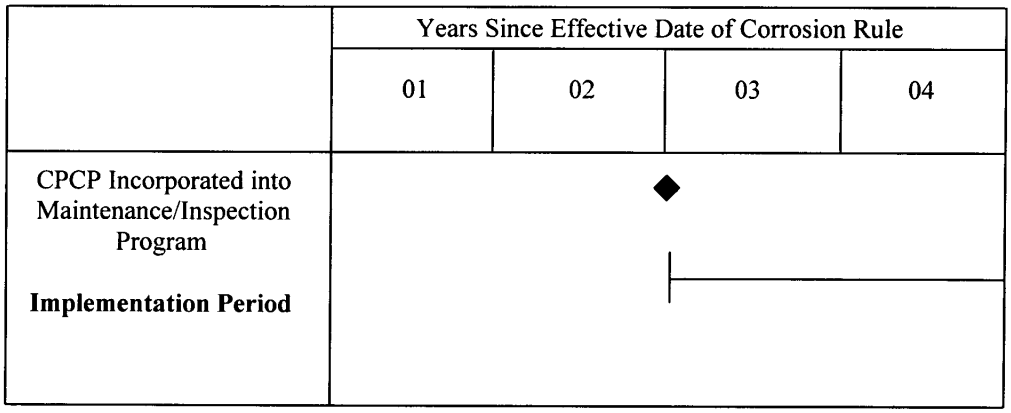

FIGURE 3-1. PROVISIONS FOR AIRPLANES THAT HAVE EXCEEDED THE IMPLEMENTATION SCHEDULE

b. Airplanes Being Removed from Storage. Corrosion inspection task intervals are established based on elapsed calendar time. Elapsed calendar time includes time out of service. The operator's CPCP should provide procedures for establishing a schedule for accomplishment of corrosion inspection tasks that have accrued during the storage period. The schedule should result in accomplishment of all accrued corrosion inspection tasks before the airplane is placed in service.

c. Unanticipated Scheduling Adjustments. The operator's CPCP should include provisions for adjustment of the repeat interval for unanticipated schedule changes. Such provisions should not exceed 10% of the repeat interval. The CPCP should include provisions for notifying the PMI when an unanticipated scheduling adjustment is made.

d. Corrosion Findings Made During Non-CPCP Inspections. Corrosion findings that exceed allowable limits may be found during any scheduled or unscheduled maintenance or inspection activities. These findings may be indicative of an ineffective CPCP. The operator should make provisions in its CPCP to evaluate these findings and adjust its CPCP accordingly.

e. Adding Newly Acquired Airplanes. Before adding any airplane to the fleet, the operator should establish a schedule for accomplishing all corrosion inspection tasks in all task areas that are due. This schedule should be established as follows:

(1) For airplanes that have previously operated under an FAA-approved maintenance program, the initial corrosion inspection task for the new operator must be accomplished in accordance with the previous operator's schedule or in accordance with the new operator's schedule, whichever would result in the earliest accomplishment of the corrosion inspection task.

(2) For airplanes that have not previously been operated under an FAA-approved maintenance program, each initial corrosion task inspection must be accomplished either before the airplane is added to the operator's fleet or in accordance with a schedule approved by the FAA. After each corrosion inspection task has been performed once, the subsequent corrosion task inspections should be accomplished in accordance with the new operator's schedule.

f. Modifications, Configuration Changes, and Operating Environment. The operator must ensure that its CPCP takes into account any aircraft modifications or configuration changes, and the applicable operating environments that were not addressed in the baseline program manual.

3-2. BASELINE PROGRAM NOT AVAILABLE. If there is no baseline program available for the operator to use in developing its CPCP, the operator should develop its CPCP using the provisions listed in Chapter 2 of this AC for a baseline program as well as the provisions listed in paragraph 1 of this chapter.

APPENDIX 1.

TYPICAL BASELINE PROGRAM MANUAL TABLE OF CONTENTS

1.0 INTRODUCTION

2.0 PROGRAM APPLICATION

3.0 BASELINE PROGRAM

4.0 REPORTING SYSTEM

5.0 PERIODIC REVIEW

6.0 CORROSION RELATED AIRWORTHINESS DIRECTIVES

APPENDIX A DEVELOPMENT OF THE BASELINE PROGRAM

APPENDIX B PROCEDURES FOR RECORDING INSPECTION FINDINGS

APPENDIX C GUIDELINES

C.1 GLOSSARY

C.2 APPLICATION OF THE BASIC TASK

C.3 DETERMINATION OF CORROSION LEVELS BASED ON FINDINGS

C.4 TYPICAL ACTIONS FOLLOWING DETERMINATION OF CORROSION LEVELS

C.5 REPORTING

C.6 PROGRAM IMPLEMENTATION

APPENDIX 2.

LOCAL AND WIDESPREAD CORROSION

Typically, widespread corrosion is more likely to have a direct effect on the airworthiness of the airplane than local corrosion. This is particularly true on older airplanes, where corrosion is more likely to occur concurrently with fatigue damage, and combined damage is more likely when the corrosion is widespread. Level 2 is widespread corrosion that occurs between successive corrosion inspection tasks and exceeds allowable limits. Lower allowable limits are often necessary for widespread corrosion than are established for local corrosion in order to take into consideration the greater potential for lower material strength. The figures in Appendix 3 show various patterns of corrosion on typical fuselage frames, skin, and stringers (longerons), illustrating examples of local and widespread corrosion.

APPENDIX 3.

EXAMPLE

CORROSION INSPECTION TASK AREAS

(A TYPICAL SMALL COMMUTER AIRPLANE)

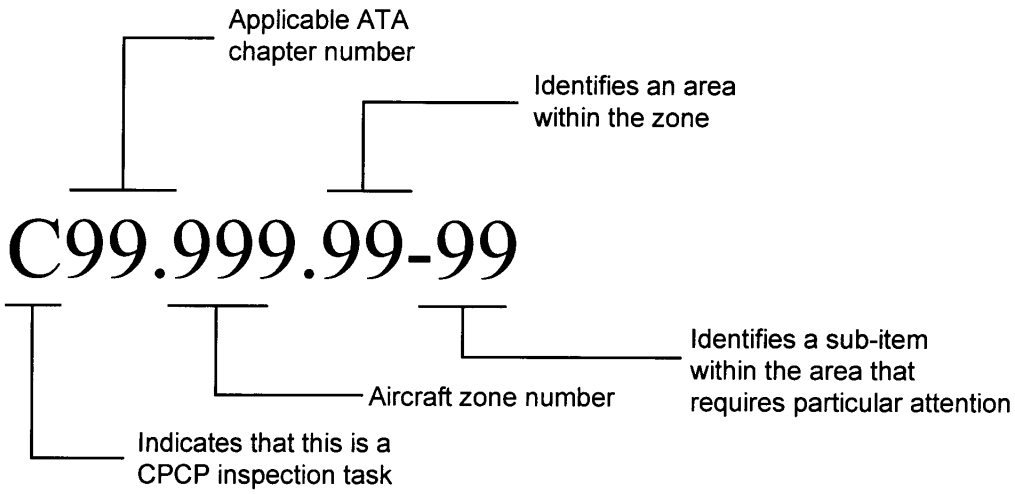

FIGURE 1. TASK NUMBER FORMAT

TABLE 1. ATA CHAPTER NUMBERS

ATA Chapter Number	Applicable Structure
32	Landing Gear
52	Doors
53	Fuselage
54	Nacelles, Pylons, and Engine Attachments
55	Stabilizers
56	Windows
57	Wings
71	Powerplant

The basic inspection tables reference Figure 1. Figure 3 shows the major fuselage station reference points on the airplane. The implementation thresholds and repeat intervals (RI) given in Tables 3 through 19 of this appendix are examples and are not to be taken as FAA-approved values.

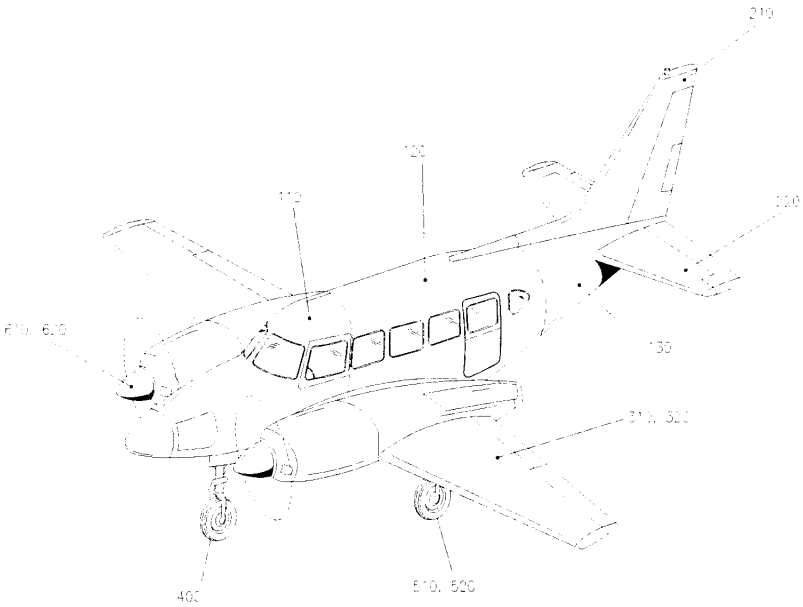

FIGURE 2. AIRCRAFT ZONES

TABLE 2. AIRCRAFT ZONE DESCRIPTION

Zone Number	Description	Zone Number	Description
110	Forward Fuselage	320	Right Wing and Nacelle
120	Center Fuselage	400	Nose Landing Gear
130	Aft Fuselage	510	Left Main Landing Gear
210	Vertical Tail	520	Right Main Landing Gear
220	Horizontal Tail	610	Left Powerplant
310	Left Wing and Nacelle	620	Right Powerplant

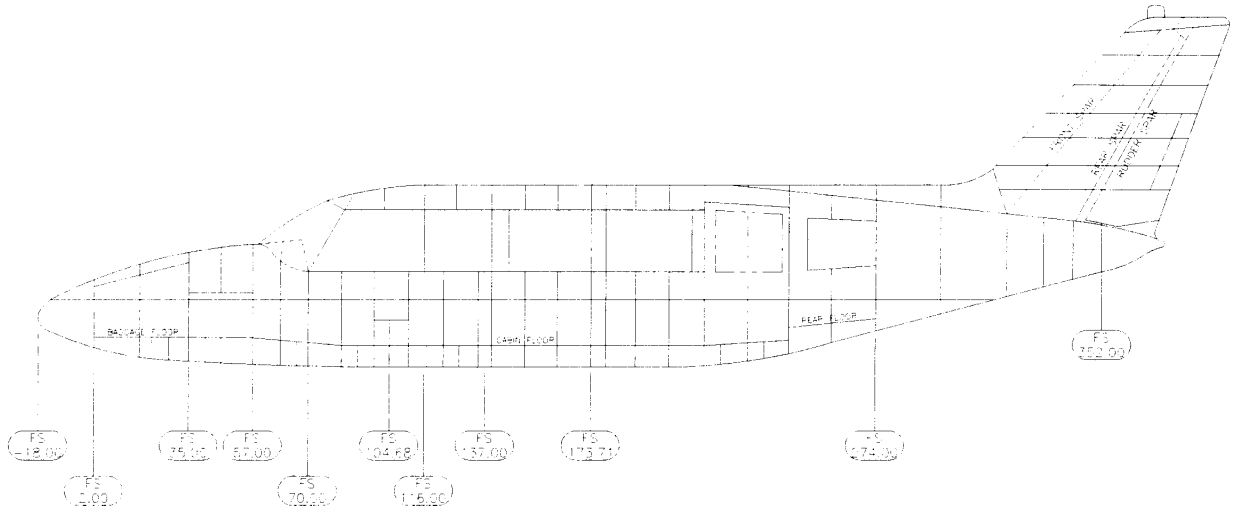

FIGURE 3. FUSELAGE STATIONS

NOTE: Stations identified by number are referenced in the task tables.

TABLE 3. INSPECTION ZONE DESCRIPTION: FORWARD FUSELAGE, INTERNAL

Task Number	Task Area Description	Aircraft Zone	IT (yr)	RI (yr)	Maintenance Manual Page Reference	Figure Reference	Notes
C52.110.02	Crew door, including the latch mechanism, hinges, door frame, and window frame	110	4	2		E-1	1
C53.110.01	Forward fuselage frames and stringers above floor level (FS 76.00 to 116.00)	110	15	8		3-3, F-1	2, 3
C53.110.02	Area under the floor of the crew station area, including frames, stringers, control cables, and pulleys (FS 76.00 to 116.00)	110	8	4		3-3, E-2, F-1	4, 5

TABLE 3. INSPECTION ZONE DESCRIPTION: FORWARD FUSELAGE, INTERNAL - Continued

Task Number	Task Area Description	Aircraft Zone	IT (yr)	RI (yr)	Maintenance Manual Page Reference	Figure Reference	Notes
C53.110.03	Structure in the airplane battery compartment (FS -18.00 to 2.00)	110	2	2	3D19	3-3, E-2, F-2	
C53.110.04	Forward baggage compartment skins, frames, and stringers (FS 2.00 to 35.00)	110	10	5		3-3, E-1, E-2, F-1	5, 6
C53.110.05 -01	Structure surrounding the combustion heater (FS 35.00 to 57.00) Heater-to-fuselage mating surfaces	110	4	2	4B10 4B14 4C10 to 4C11 4C13	3-3, E-1, F-1	7
C56.110.01	Forward fuselage window frame	110	15	8		—	8, 9, 10

TABLE 3. INSPECTION ZONE DESCRIPTION: FORWARD FUSELAGE, INTERNAL - Continued

NOTES:

1. Inspect and repair or replace door seal as necessary.

2. Remove interior furnishings, headliner, side panels, window moldings, and insulation blankets before inspection.

3. Dry out or replace wet insulation blankets.

4. Remove all forward fuselage floorboards before inspection.

5. Application of a corrosion prevention compound such as MIL-C-16173, Grade 2 (or equivalent) on all fuselage structure is recommended.

6. Remove all access covers in the floor of the compartment before inspection.

7. Remove heater before inspection.

8. Removal of windows is not required.

9. Remove window moldings and insulation blankets before inspection.

10. Remove and replace degraded sealant around windows.

TABLE 4. INSPECTION ZONE DESCRIPTION: CENTER FUSELAGE, INTERNAL

Task Number	Task Area Description	Aircraft Zone	IT (yr)	RI (yr)	Maintenance Manual Page Reference	Figure Reference	Notes
C52.120.01	Cabin door, including the latch mechanism, hinges, door frame, and window frame	120	4	2		E-1	1
C52.120.02	Cargo door (if installed), including the latch mechanism, hinges, and door frame	120	4	2		E-1	1
C53.120.01	Center fuselage frames and stringers above floor level (FS 116.00 to 274.00). Pay particular attention to joints, potential water entrapment areas, low-point drain areas, and repairs	120	15	8		3-3, F-3	2, 3

TABLE 4. INSPECTION ZONE DESCRIPTION: CENTER FUSELAGE, INTERNAL

Continued

Task Number	Task Area Description	Aircraft Zone	IT (yr)	RI (yr)	Maintenance Manual Page Reference	Figure Reference	Notes
C53.120.02	Area under the floor of the center fuselage section (excluding areas under an optional lavatory or refreshment center), including frame areas (excluding areas under an optional lavatory or refreshment center), including frames, stringers, control cables, and pulleys (FS 116.00 to 274.00).	120	4	4		3-3, E-2, F-3	4, 5
-01	Area under the floor beneath refreshment center or lavatory (if installed), including frames, stringers, control cables, and pulleys	120	4	2	4J5 to 4J9		5, 6
C56.120.01	Center fuselage window frame structure	120	15	8		—	7

TABLE 4. INSPECTION ZONE DESCRIPTION: CENTER FUSELAGE, INTERNAL
Continued

NOTES:

1. Inspect and repair or replace door seal as necessary.

2. Remove interior furnishings, headliner, side panels, window moldings, and insulation blankets before inspection.

3. Dry out or replace wet insulation blankets.

4. Remove all center fuselage floorboards before inspection.

5. Application of a corrosion prevention compound such as MIL-C-16173, Grade 2 (or equivalent), followed by a coat of MIL-C-16173, Grade 4 (or equivalent) on all fuselage structure beneath the floors is recommended.

6. Remove all center fuselage section floorboards under and adjacent to the refreshment center or lavatory before inspection.

7. Remove window moldings before inspection.

TABLE 5. INSPECTION ZONE DESCRIPTION: AFT FUSELAGE, INTERNAL

Task Number	Task Area Description	Aircraft Zone	IT (yr)	RI (yr)	Maintenance Manual Page Reference	Figure Reference	Notes
C53.130.01	Aft fuselage frames and stringers (FS 274.00 to 352.00)	130	5	3		3-3, E-1, F-4	
C53.130.02	Aft fuselage control cables and pulleys	130	10	5		—	
C53.130.03	Elevator bellcrank	130	10	5		E-1, F-5	1
C53.130.04	Elevator bungee spring	130	10	5		E-1, F-5	
C53.130.05	Elevator control rod	130	4	2		E-1, F-5	
C53.130.06	Rudder bellcrank	130	4	2		E-1, F-6	1

NOTE: Application of a corrosion prevention compound such as MIL-C-16173, Grade 4 (or equivalent) on surface (excluding bearing areas) is recommended.

TABLE 6. INSPECTION ZONE DESCRIPTION: FORWARD FUSELAGE, EXTERNAL

Task Number	Task Area Description	Aircraft Zone	IT (yr)	RI (yr)	Maintenance Manual Page Reference	Figure Reference	Notes
C53.110.06	Forward fuselage skin, including the skin surface, joints, access panel and door openings, fastener areas, and antenna-to-fuselage mating surfaces (FS 2.00 to 116.00)	110	4	2		3-3	1, 2
C53.110.07	NLG bay frames and skin	110	2	1		—	
C56.110.02	Exterior of forward fuselage window frames	110	4	2		—	3

NOTES:

1. **Ensure that fuselage drains are clear.**
2. **Remove antennas to inspect the skin beneath them.**
3. **Replace damaged or degraded sealant around windows.**

TABLE 7. INSPECTION ZONE DESCRIPTION: CENTER FUSELAGE, EXTERNAL

Task Number	Task Area Description	Aircraft Zone	IT (yr)	RI (yr)	Maintenance Manual Page Reference	Figure Reference	Notes
C53.120.04	Center fuselage skin, including the skin surface, joints, access panel and door openings, fastener areas, and antenna-to-fuselage mating surfaces (FS 116.00 to 274.00)	120	4	2		3-3	1, 2
-01	Fuselage areas in heater and engine exhaust trails		2	1			
C56.120.02	Exterior of center fuselage window frames, including the surrounding fuselage structure, and window frame fasteners. Look for signs of leaks, loose fasteners, and degraded sealant	120	4	2		—	3, 4, 5

NOTES:

1. **Ensure that fuselage drains are clear.**
2. **Remove antennas and inspect the skin beneath them.**
3. **Replace damaged or degraded sealant around windows.**
4. **Removal of windows is not required.**
5. **Remove and replace degraded sealant around windows.**

TABLE 8. INSPECTION ZONE DESCRIPTION: AFT FUSELAGE, EXTERNAL

Task Number	Task Area Description	Aircraft Zone	IT (yr)	RI (yr)	Maintenance Manual Page Reference	Figure Reference	Notes
C53.130.07	Aft fuselage skin, including the skin surface, joints, access panel and door openings, and fastener areas (FS 274.00 to 352.00)	130	4	2		3-3	1

NOTE: Ensure that fuselage drains are clear.

TABLE 9. INSPECTION ZONE DESCRIPTION: EMPENNAGE, VERTICAL STABILIZER

Task Number	Task Area Description	Aircraft Zone	IT (yr)	RI (yr)	Maintenance Manual Page Reference	Figure Reference	Notes
C55.210.01	Vertical stabilizer skin, including the skin surface, joints, access panel openings, and fastener areas	210	4	2	4F19 to 4F21	-	1
-01	Areas around the edges of the vertical stabilizer pneumatic deicing boot (if installed)		4	2		F-7	
C55.210.02	Internal structure of the vertical stabilizer, including the front spar, rear spar, and ribs	210	15	8		E-1, F-8	1, 2
C55.210.03	Vertical stabilizer attach points	210	10	5	1F9 to 1F11 1F14	E-1, F-8	

NOTES:

1. Use of a borescope or other FAA-approved inspection method to improve access to the inspection area is recommended.

2. Consult a Designated Engineering Representative for design and approval of inspection holes that may have to be created to allow access to the inspection area for borescope or visual inspection.

TABLE 10. INSPECTION ZONE DESCRIPTION: EMPENNAGE, RUDDER

Task Number	Task Area Description	Aircraft Zone	IT (yr)	RI (yr)	Maintenance Manual Page Reference	Figure Reference	Notes
C55.210.04	Rudder skin, including the skin surface, fastener areas, and joints	210	4	2		—	
C55.210.05	Exterior surface and fasteners of the rudder spar	210	10	5		F-9	1
C55.210.06	Rudder torque tube	210	4	2		F-9	
C55.210.07	Rudder hinge points on the rudder and the vertical stabilizer, including bearings, lugs, and fasteners	210	8	4	1F9 to 1F10 1F13	F-9	

NOTE: Remove rudder before inspection.

TABLE 11. INSPECTION ZONE DESCRIPTION: EMPENNAGE, HORIZONTAL STABILIZER

Task Number	Task Area Description	Aircraft Zone	IT (yr)	RI (yr)	Maintenance Manual Page Reference	Figure Reference	Notes
C55.220.01	Horizontal stabilizer skin, including the skin surface, joints, access panel openings, and fastener areas	220	4	2	4F19 to 4F21	—	
-01	Areas around the edges of the horizontal stabilizer pneumatic deicing boots (if installed)		4	2		F-7	
C55.220.02	Internal structure of the horizontal stabilizer, including the front spar, rear spar, and ribs	220	10	5		F-10	1, 2
C55.220.03	Horizontal stabilizer attach points	220	10	5	1F9 to 1F12	F-11	

NOTES:

1. Use of a borescope or other FAA-approved inspection method to improve access to the inspection area is recommended.

2. Application of a corrosion prevention compound such as MIL-C-81309, Type II (or equivalent) on all structure inside the horizontal stabilizer is recommended. Application of the CPCP should be accomplished by fogging the area through existing access panels and drain holes.

TABLE 12. INSPECTION ZONE DESCRIPTION: EMPENNAGE, ELEVATOR

Task Number	Task Area Description	Aircraft Zone	IT (yr)	RI (yr)	Maintenance Manual Page Reference	Figure Reference	Notes
C55.220.04	Elevator skin, including the skin surface, joints, and fastener areas	220	4	2		—	
C55.220.05	Internal structure of the elevator, including the spar and ribs	220	10	5		F-12	1, 2
C55.220.06	Elevator torque tube	220	2	2		E-1, F-11	
C55.220.07	Elevator control horn	220	2	2		E-1, F-11	
C55.220.08	Elevator hinge points on the elevator and the horizontal stabilizer, including the bearings, lugs, and fasteners	220	8	4		F-12	3

NOTES:

1. **Use of a borescope or other FAA-approved inspection method to improve access to the inspection area is recommended.**

2. **Application of a corrosion prevention compound such as MIL-C-81309, Type II (or equivalent) on all structure inside the horizontal stabilizer is recommended.**

3. **Remove elevator prior to inspection.**

TABLE 13. INSPECTION ZONE DESCRIPTION: WING, MAIN

Task Number	Task Area Description	Aircraft Zone	IT (yr)	RI (yr)	Maintenance Manual Page Reference	Figure Reference	Notes
C57.310.01	Wing skin, including the skin surface, joints, access panel and door openings and fastener areas	310 320	4	2	4F19 to 4F21	—	1, 2
-01	Wing skin on the leading edge around the edges of the pneumatic deicing boot (if installed)		4	2		F-7	
-02	Wing skin in the engine exhaust trail		2	1		—	
-03	Wing skin surrounding fuel vents and in the path of vented fuel on the underside of the wing		2	1		—	
C57.310.02	Internal area of the main wing, including the front spar, main spar, rear spar, ribs, control cables, pulleys, and the aileron bellcrank	310 320	15	8	2K5 to 2K11	E-3, F-13, F-14	3, 4, 5
C57.310.03	Main wing spar splice area (FS 137.00)	310 320	10	5	1E24 to 1F7 4G18	E-1, F-15	

TABLE 13. INSPECTION ZONE DESCRIPTION: WING, MAIN
Continued

Task Number	Task Area Description	Aircraft Zone	IT (yr)	RI (yr)	Maintenance Manual Page Reference	Figure Reference	Notes
-01	The area of the main spar splice directly below the evaporators of the air conditioning system (if installed)		10	5		—	
C57.310.04	Wing forward and rear spar attach points (FS 104.68 and FS 173.71, respectively)	310 320	8	4	1E24 to 1F7	E-1, F-15	6
C57.310.05	Internal structure of the wing leading edge	310 320	10	5		E-3, F-15	4, 5
C57.310.06	Main landing gear bay frames and skin	310 320	2	1		—	

NOTES:

1. Remove all wing-to-fuselage and wing-to-nacelle fairings prior to inspection.

2. Thorough cleaning of exhaust staining is essential before inspection.

3. Remove fuel cell and liner for access to spars and other internal wing structure in the main wing box.

4. Use of a borescope or other FAA-approved inspection method to improve access to the inspection area is recommended.

5. Application of MIL-C-16173, Grade 2 (or equivalent) followed by a coat of MIL-C-16173, Grade 4 (or equivalent) on all structure inside the wing is recommended.

6. Remove wing attach bolts before inspection. Removal of the wing is not required.

TABLE 14. INSPECTION ZONE DESCRIPTION: WING, FLAP

Task Number	Task Area Description	Aircraft Zone	IT (yr)	RI (yr)	Maintenance Manual Page Reference	Figure Reference	Notes
C57.310.07	Flap skin, including the skin surface, joints, and fastener areas	310 320	4	2		—	
C57.310.08	Flap internal structure, including the flap spar	310 320	10	5		F-16	1, 2
C57.310.09	Flap tracks and hinge points	310 320	4	2	1F1 to 1F2	F-17	
C57.310.10	Flap flexible shaft assembly	310 320	10	5	1J9 to 1J10 1J19 1J21	F-18	

NOTES:

1. Use of a borescope or other FAA-approved inspection method to improve access to the inspection area is recommended.

2. Application of a corrosion prevention compound such as MIL-C-81309, Type II (or equivalent) on all structure inside the flap is recommended.

TABLE 15. INSPECTION ZONE DESCRIPTION: WING, AILERON

Task Number	Task Area Description	Aircraft Zone	IT (yr)	RI (yr)	Maintenance Manual Page Reference	Figure Reference	Notes
C57.310.12	Aileron skin, including the skin surface and fastener areas	310 320	4	2		—	
C57.310.13	Aileron hinge points, including bearings, lugs, and fasteners	310 320	8	4	1F1 to 1F2	F-19	
C57.310.14	Aileron control rod	310 320	4	2		F-14	

TABLE 16. INSPECTION ZONE DESCRIPTION: WING NACELLE

Task Number	Task Area Description	Aircraft Zone	IT (yr)	RI (yr)	Maintenance Manual Page Reference	Figure Reference	Notes
C54.310.01	Nacelle skin, including the skin surface, access panel and door openings, joints, and fastener areas	310 320	4	2		—	
-01	Nacelle skins in the exhaust trail		4	2			
C54.310.02	Interior of the of nacelle baggage locker	310 320	4	2		F-20	1
C52.310.01	Nacelle baggage door, including the latch mechanism, door frame, and hinges	310 320	4	2		E-3	2

NOTES:

1. Ensure that baggage locker drains are clear.

2. Inspect and repair or replace door seal as necessary.

TABLE 17. INSPECTION ZONE DESCRIPTION: NOSE LANDING GEAR (NLG)

Task Number	Task Area Description	Aircraft Zone	IT (yr)	RI (yr)	Maintenance Manual Page Reference	Figure Reference	Notes
C32.400.01	NLG assembly, including the steering arm, shimmy damper, drag brace, torque links, housing, and uplock rod and hook	400	4	2	2D17 to 2D20 2D22 2E6	F-21	
C32.400.02	NLG attach points and bearings	400	8	4	2D21 to 2D22	—	1
C32.400.03	NLG actuator, including bearings, housing, piston, and fastening hardware	400	4	2		—	
C32.400.04	NLG door and hinges	400	4	2	2E7	F-21	
C32.400.05	NLG wheel	400	4	2	2F4 2F7	—	

NOTE: Remove NLG before inspection.

TABLE 18. INSPECTION ZONE DESCRIPTION: MAIN LANDING GEAR (MLG)

Task Number	Task Area Description	Aircraft Zone	IT (yr)	RI (yr)	Maintenance Manual Page Reference	Figure Reference	Notes
C32.510.01	MLG assembly, including the side brace, downlock hook and spring assembly, torque links, and housing	510 520	2	1	2E7 to 2E12	F-22	
C32.510.02	MLG attach points and bearings	510 520	4	2	2E11 to 2E12	—	1
C32.510.03	MLG actuator, including bearings, housing, piston, and fastening hardware	510 520	2	1	2C17 2C19 2C20 to 2C21	—	

TABLE 18. INSPECTION ZONE DESCRIPTION: MAIN LANDING GEAR (MLG)

Continued

Task Number	Task Area Description	Aircraft Zone	IT (yr)	RI (yr)	Maintenance Manual Page Reference	Figure Reference	Notes
C32.510.04	MLG inboard door actuator, including bearings, housing, piston, and fastening hardware	510 520	2	1	2D1 to 2D2 2C23 to 2C24	—	
C52.510.01	MLG inboard and outboard doors and hinge points	510 520	2	1	2E18 to 2E19	F-22	
C32.510.05	MLG wheel and brakes	510 520	2	1	2F6 to 2F11 2F15 to 2F24	—	

NOTE: Remove MLG before inspection.

TABLE 19. INSPECTION ZONE DESCRIPTION: POWERPLANT

Task Number	Task Area Description	Aircraft Zone	IT (yr)	RI (yr)	Maintenance Manual Page Reference	Figure Reference	Notes
C54.610.01	Engine mount and attaching hardware	610 620	4	2	2H7 2H17	F-23	1
C71.610.01	Propeller blade	610 620	4	2	2H11 4E18	—	
C54.610.02	Propeller hub and attaching hardware	610 620	4	2	2H12	F-24	

NOTE: Remove engine before inspection.